Circuits for the Hobbyist
by VA3AVR

Tony's Message Forum - Ask your questions here. Someone may answer them.

Circuits

- Active Power Siren
- Active Antenna for AM/FM/SW
- Active Antenna for HF/VHF/UHF
- Active FM Antenna Amplifier
- Acoustic Road Recorder UPDATED
- Alternating On-Off Switch
- Audio Booster with 1 Transistor
- Audio Pre-Amplifier #1
- Automatic 6/12V NiCad Battery Charger
- Auto-Fan, automatic temperature control
- Basic RF Oscillator
- Basic LM3909 Led Flasher
- Battery Monitor for 12V Lead-Acid
- Battery Tester for 1.5 & 9V
- Battery (NiCad) Rejuvenator
- Bench Top Power Supply, Part 1
- Bench Top Power Supply, Part 2
- Bench Top Power Supply, Part 3
- Bench Top Power Supply, Part 4 Pics
- Bench Top Power Supply, Auto-Fan
- Bicycle Light with charger (soon)
- Birdie Doorbell Ringer
- Broadcast-Band RF Amplifier
- 'Bug' Detector with Beep
- Car Back-up Alarm New
- Car Converter for 12V to 9V
- Car NiCad Charger
- Christmas Lights Tester
- Clock Generator
- Continuity Tester, Low-Voltage
- Continuity Tester, Smart
- Continuity Tester, Latching
- Cut Phone Line Detector
- Dark/Light Activated Relay
- Dazer
- DC Motor Reversing Circuit
- DC Motor Control Circuit
- DSL Filter (phone-line)
- Dual 12V Power Supply
- Fluid-Level Detector
- Fox & Hound, wire tracer
- Gadgets for Radio Control Page
- Gel Cell Charger, I
- Gel Cell Charger, II
- Headlight Alarm
- Heat Sensor -- OFF-LINE (performance problems)
- Lantern Flasher/Dimmer
- Led Flasher, 2 transistor
- Leds Flasher, alternately
- LED Pilot Light (AC or DC)
- Light Sensor With Hysteresis
- Logic Probe(1), with pulse, TTL/CMOS
- Logic Probe(2), with pulse, TTL/CMOS
- Logic Probe(3), Audible, TTL/CMOS
- Micro-Spy with FET's
- Micro-Spy with USW
- Micro-Spy with TTL
- Miniature FM Transmitter #1
- Miniature FM Transmitter #2
- Miniature FM Transmitter #3
- Miniature FM Transmitter #4
- Mini-Drill variable Powersupply
- Missing Pulse Detector (Basic)
- Morse Code Practice Keyer, I
- Morse Code Practice Keyer, II
- Motor Accu Lader (Dutch language)
- Motorcycle Battery Charger
- No-Hassle Third Brake Light
- Power Supply Converted from a PC (link)
- Practical Intercom
- Pulse Timer, 555
- Pulse Width modulator, 555
- Pulse Width modulator, 4093
- Radio Shack Special - Transmitters by Patrick Cambre
- Relays - Sound Activated
- Relays - Transistor Boosted
- Relays - Delayed Turn-on
- Relays - Automatic Turn-off
- Relays - Long Duration
- Relays - Long Duration - 1 or 100 min
- Relays - Long Duration - 1 min to 30 hrs
- Relays - 1nf Latching
- RF Transmitter, light sensing
- RJ45 Cable Tester Modified
- Simplest RF Circuit
- Simplest RF Transmitter
- Simple Transistor Audio PreAmplifier
- Single IC Audio Preamplifier
- Single Cell Sealed Lead Acid Charger - by Søren New
- Solar Cell NiCad Charger
- Solid State Relay
- Stun Gun circuits on Chemelec's site
- Third Brake Light Pulser
- Touch Activated Alarm System
- Touch Switch using Transistors
- Two-Tone Trainhorn
- Universal Flasher Circuit
- Variable Power Supply, 1 - 30V @ 1.5A
- Wailing Alarm
- Water-level Sensing and Control
- Waterpump Safety Guard for Fish-pond
- Weller WLC100 Electronic Soldering Station
- Wireless Microphone New
- Xmas Lights Tester
- Zap Adapter
- 1.5V Tracking Transmitter
- 4-Transistor Tracking Transmitter UPDATED
- 7.2V Field Charger (.pdf file)
- 9-V Stabilized Powersupply
- 9 to 9 pin (Female) Nullmodem Cable
- 12V to 9V with a LM317 updated Amp Booster added
- 30-Meter QRP Transmitter for Morse Code
- 555 DC-AC Inverter
- 555 Timer IC Tester
- 555 Go No/Go Tester More advanced
- Electronic Symbols Template - Paint Shop Pro updated 10-27-2004

Tutorials

- 555 Timer/Oscillator
- 741 Op-Amp
- Capacitors updated Added Fig.3b, 10-27-2004
- Electronic Template
- MosFet Test
- Piezo Education/Tutorial
- PLL
- Resistor Color Code Tutorial updated Spelling, 8-05-2004
- SCR Tester
- Triac Test
- UJT Test
- Coils
- Integrated Circuits
- Make Your Own Shunts
- Relays, Relay Drivers, Solid-State

"Green" means on-line, "Red" means off-line

Bookmark this valuable page with *'Ctrl-D'*.

Just in case you're gonna ask: **All drawings are created with Paint Shop Pro**

Info/Data

- Circuits Archive - Older circuits. Most are working, some are not. Could be still useful.
- Tony's Data Sheets - Data Sheet for common Semiconductors
- Data Sheets Archive - Link to tons of data sheets.
- Radio Shack Partnumbers - Most common order numbers for my circuits
- Resistor Value Calculator - By Danny Goodman, AE9F New
- Tandy Corporation - European/Australian counterpart of Radio Shack
- Transistor 'SM' marking codes by Philips
- TUP/TUN/DUS/DUG European transistor replacement system
- PN100/200 - Data Sheets for the PN100 and PN200
- LF13741 - Monolitic JFET Input OpAmp Data Sheet
- Toroids, RF/EMI Cores - Variety of commonly used toroids, colors, etc.
- Guelph Amateur Radio Club - GARC--Official Homepage
- Jonathan's Electronics Message Forum - More help if you need it! New

Other Interesting Links - Links to other interesting and informative Electronics Websites. UPDATED November 1, 2004

DISCLAIMER: I take no responsibility whatsoever for the use and/or implementation thereof, or the misuse leading to damage to equipment, property, or life, caused by the above circuits. Check with local, provincial and federal laws before operating some of these devices. You may also check your life insurance and/or the fact if they cover death by electrocution if you intend to play with Micro-wave ovens and other possible lethal HV devices. Safety is a primary concern when working with high power circuits or con/inverters. Play it safe!

Last Updated December 17, 2004

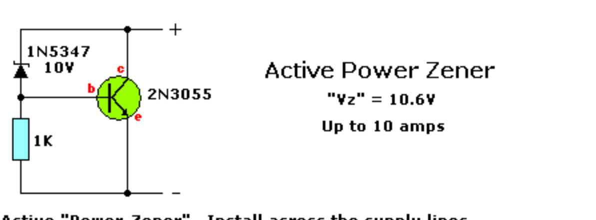

Active "Power-Zener". Install across the supply lines.
Avoids problems like false triggering on spikes.
Works better then an SCR (which has the memory of an elephant).

Back to Circuits page

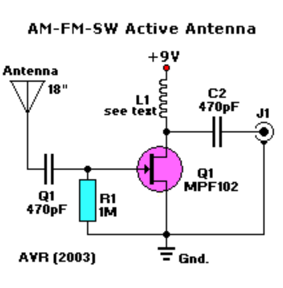

Active Antenna for AM/FM/SW:

This simple little circuit can be used for AM, FM, and Shortwave(SW). On the shortwave band this active antenna is comparable to a 20 to 30 foot wire antenna. It is further more designed to be used on receivers that use untuned wire antennas, such as inexpensive units and car radios.

L1 can be selected for the application. A 470µH coil works on lower frequencies and lie in AM, for shortwave try a 20µH coil. This unit can be powered by a 9 volt alkaline battery. If a power supply is used, bypass the power supply with a 0.04µF capacitor to prevent noise pickup. The antenna used on this circuit is a standard 18-inch telescoping type, but a thick piece of copper, bus-bar, or piano wire will also work fine.

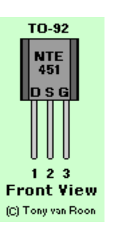

The heart of this circuit is Q1, a JFET-N-Channel,
UHF/VHF amplifier in a TO-92 case.
It can be replaced with an NTE451.

Output is taken from jack J1 and run to the input on the receiver.

Source: "Popular Electronics" magazine, July 1989 issue.
Copyright © Gernsback Publications, Inc. 1989. (Gernsback no longer in business).

Back to Circuits page

Active Antenna AA-7 HF/VHF/UHF, 3 to 3000 MHz

By Fred Blechman

"Lift those hard-to-hear signals out of the mud with this handy receiver accessory."

If you have a shortwave or high-frequency receiver or scanner that is struggling to capture signals with a short, whip antenna, and you'd like the kind of performance that a 60-foot longwire antenna can provide but lack the space to put one up, consider building the *AA-7 HF/VHF/UHF Active Antenna* described in this article. The AA-7 is a relatively simple antenna that is designed to amplify signals from 3 to 3000 MegaHertz, including three recognized ranges: 3-30Mhz high-frequency (HF) signals; 3-300Mhz very-high frequency (VHF) signals; 300-3000MHz ultra-high (UHF) frequency signals. Those bands are typically occupied by shortwave, ham, government, and commercial radio signals.

Active Antennas:

In its simplest form, an active antenna uses a small whip antenna that feeds incoming RF to a preamplifier, whose output is then connected to the antenna input of a receiver. Unless specifically designed otherwise, all active antennas are intended for receive-only operation, and thus should not be used with transceivers; transmitting into an active antenna will probably destroy its active components. A well designed broadband active antenna consider field strength of the desired signal (measured in microvolts per meter of antenna length), atmospheric and other noise, diameter of the antenna, radiation resistance, and antenna reactance at various frequencies, plus the efficiency and noise figure of the amplifier circuit itself.

Circuit Description:

Fig. 1 shows the schematic diagram of the AA-7, which contains only two active elements; Q1 (an MFE201 N-Channel dual-gate MOSFET) and Q2 (a 2SC2570 NPN VHF silicon transistor). Those transistors provide the basis of two independent, switchable RF pre-amplifiers. Two double-pole double-throw (DPDT) switches play a major role in this operation of the AA-7. Switch S1 is used to select one of the two preamplifier circuits (either HF or VHF/UHF). Switch 2 is used to turn off the power to the circuit, while coupling the incoming RF directly to the input of the receiver. That gives the receiver non-amplified access to the auxiliary antenna jack, at J1, as well as the on-board telescoping whip antenna. With switch S2 in its power-on position, the input and ouput jacks are disconnected and B1 (a 9 volt battery) is connected to the circuit. With switch S1 in the position shown in the schematic, incoming RF is directed to the HF preamp circuit built around Q1 (an MFE201 N-Channel dual-gate MOSFET). The HF preamp operates with an exceptionally low noise level, and is ideal for copying weak CW and singe-side band signals. When S1 is switched to the other position, the captured signal is coupled to the VHF/UHF preamp built around Q2 (a 2SC2570 NPN VHF silicon transistor), which has exellent VHF through microwave characteristics. With the on-board whip antenna adjustable to resonance through much of the VHF-UHF region (length in feet = 234 divide by the frequency in Mhz), the VHF/UHF mode is ideal for indoor and portable use with VHF scanners and other receivers. Either mode can be used when tuning 3-30 Mhz HF signals. The VHF/UHF preamp offers higher gain than the HF preamp, but also has a higher noise level. You can easily choose either amplifier for copying any signal; of interest--just try both positions. The RF gain control (R5) can be used to trim the ouput of either amplifier.

Caution: The AA-7 is ***not*** intended for transmitting operation (be it Ham, Maritime, or CB); if it is used with a transceiver of any kind, make sure it is not possible to transmit by accidentally pressing a mike buton of DW keyer. Transmitting RF into the AA-7 is likely to ruin one of both of the transistors in the circuit.

Construction:

The AA-7, which can be built from scratch or purchased in kit form from the supplier listed in the Parts List, was assembled on a printed circuit board, measuring 4 by 4-11/16 inches. A template for the pcb board is shown in fig. 2. You can either etch your own board from that template, or purchase the circuit board or the complete kit of parts (which includes the pcb and all parts, but not the enclosure). The kit comes with a 16-page kit instruction manual that gives step-by-step assembly instructions and contains additional information not covered in this article. Kit assembly time, working slowly and carefully, should take less than an hour. Most of the parts specidied in the Parts list are standard components and can be procured through conventional hobby electronics suppliers. However, some parts--J1, J2, S1, S2, and R5--have particular physical mounting dimensions; the Printed Circuit Board is designed to accept these particular parts. In addition, Q1 and Q2 can be hard to find; however, it is possible to make substitutions provided that you can find a supplier. Suitable replacements for Q1 and Q2 are given in the Parts List.
The telescoping whip antenna screw-mounts to the board; the screw provides contact between the printed circuit board traces and the antenna. To save time and trouble locating and ordering hard-to-find parts, a Special Parts Kit is also offered by the supplier listed in the Parts List.
A parts placement (layout) diagram for the AA-7's printed circuit board is shown in figure 3. When assembling the circuit, be especially careful that transistors Q1 and Q2, and the electrolytic capacitor C4, are oriented as shown.
Although not shown in the schematic (Fig. 1) or the layout (Fig. 3) diagrams, an optional led power indicator can be added to the circuit. Adding a power indicator to the circuit allows you to tell at a glance if the circuit is on; leaving the circuit on, even though the AA-7 draws only about 0.7 mA, will eventually discharge the battery. Of coutse, adding an led will increase the current drain to by about 7 mA, but the red glow makes it obvious when the unit is on.
If you decide to include the indicator in your project, power for the indicator can be easily taken from the switched 9-volt DC terminal of S2 (center terminal, right side, looking at the top of S2). Simply connect the positive voltage to the anode (longer wire) of the led and connect her cathode lead through a current limiting resistor of about 1000 ohm to a ground point on the printed circuit board, or as the author did fromt the frame of R5. Mount the led at any convenient point near the switch.
Although **not** supplied with the kit, a custom plastic enclosure (with front and back panels) or a regular 'hobby' case of some sorts, and knobs for the switches and gain control is offered in the Parts list. The enclosure comes pre-drilled and silk-screened with the appropriate legends for all the circuit controls and connecteors, but is not equipped with holes for the whip antenna or the led (if you include one)>

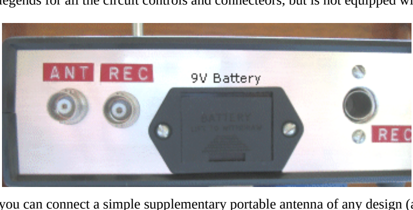

Test and Use:

Prepare a coaxial cable to connect the RF output of the AA-7 to the antenna input of your receiver or scanner. One end of the interconnecting cable must be terminated with an RCA phono plug; the other end connector depends on the target receiver or scanner. With some receivers, the only practical connection is to clip the output of the AA-7 to the receiver's antenna, although that connection won't be as effective as conventional (ground-return type) coupling.
To increase signal strenght, especially for the lower frequencies, you can connect a simple supplementary portable antenna of any design (a dipole, random-lenght wire with Earth ground, a bigger vertical whip of some kind, etc.) to the circuit. Just use a small-diameter coaxial cable terminated in an RCA plug for mating with J1.
No alignments are required. If you're using the whip antenna, simply connect the output of the AA-7 to your receiver, with the unit turned off (that's the bypass position) and the RF gain control (R5) turned fully counter-clock wise. Turn on the receiver and tune-in a weak station. Switch S2 on, and adjust the gain control clockwise to increase the output signal. Toggle S1 back and forth to see which setting gives you the best results. Don't be surprised if the gain control overloads the receiver; if so, back it off.

Troubleshooting:

The fact that there are two independent preamplifiers in the AA-7 makes faults easeir to diagnose than with many other devices. If a problem occurs, only at one setting of S1, concentrate on that part of the circuit. If the problem is common to both settings, the components and the connections common to both preamps should be checked. Maker sure the jumper wires are in place.
There are other characteristics or phenomena associated with preamplifiers and active antennas that does not mean that your circuit is malfunctioning. For example, if you have strong AC hum in the HF setting, the antenna is too close to an AC cord or powerline. HF signals may be clearer at the VHF/UHF setting than ast the HF setting. Why? Although either preamp may be used for HF, the signal strength will be greater with the VHF/UHF preamp. However, the HF signal-to-noise ration is better with the dual-gate-MOSFET-based preamp. Try both and use the best for your particular receiver conditions.
Some portable receivers not enclosed in metal cases may break into oscillation when connected to any RF preamplifier. Try reducing the AA-7's gain and make sure that good grounds are provided with the interconnecting coax cables. A preamplifier will intensify any problems due to poor receiver design: overloading, images, or any other problems with selectivity and image rejection.

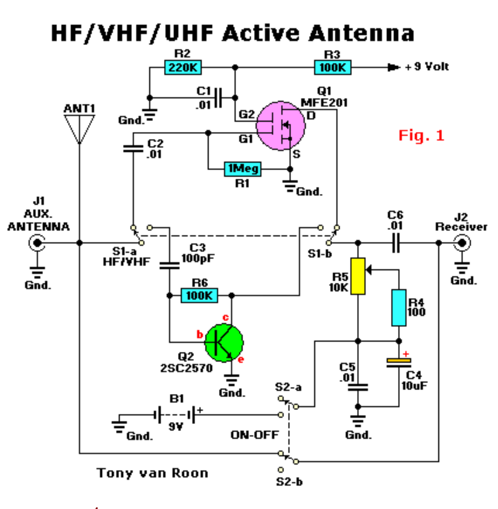

Parts List and other components:

Semiconductors:

```
Q1 = MFE201, SK3991, or NTE454. N-Channel, dual-gate MOSFET (see text)
Q2 = 2SC2498, 2SC2570, 2N5179, SK9139, or NTE10. NPN VHF/UHF silicon transistor (see text)
     Note: If you use the NTE107 as a replacement, make sure to insert it correctly
     into the pcb.  The orientation is different than as shown on the parts layout
     diagram. (e-c-b seen frontview for NTE107).  See this Data Sheet
```

Resistors:

```
All Resistors are 5%, 1/4-watt
   R1 = 1 Mega Ohm
   R2 = 220K
R3,R6 = 100K
   R4 = 100 ohm
   R5 = 10K potentiometer, (pc mount)
```

[illegible]

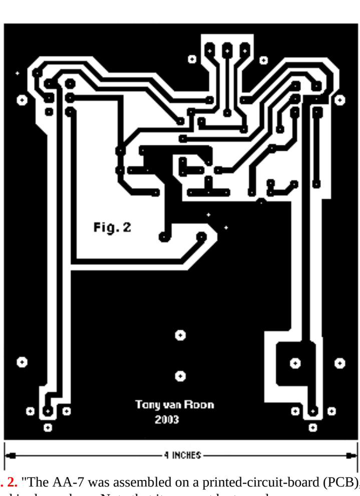

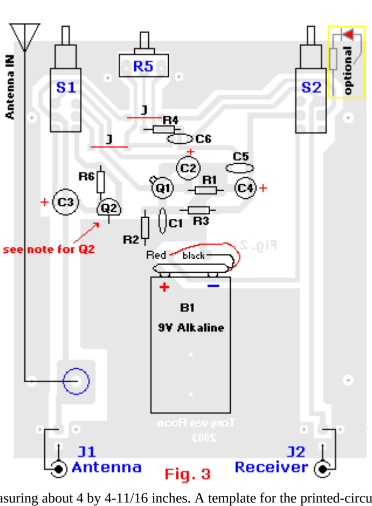

Fig. 2. "The AA-7 was assembled on a printed-circuit-board (PCB), measuring about 4 by 4-11/16 inches. A template for the printed-circuit-board is shown here. Note that it may not be to scale.

Parts assembly diagram (layout) is shown in **Fig. 3** to make soldering the unit together a breeze!"

Fig. 4. shows the finished assembly without the enclosure. Make sure the antenna-hole in the enclosure is in-line with one on the pcb. On mine I used a stud with thread on both sides to enable me to use different length antenna's; all I have to do is unscrew and screw another antenna back in without taking the AA-7 apart. I used a 9-volt battery tray which allows me to replace the battery without opening up the case, but the regular battery clip and battery works fine. As you can see from the pictures, this is a nice one-evening project.

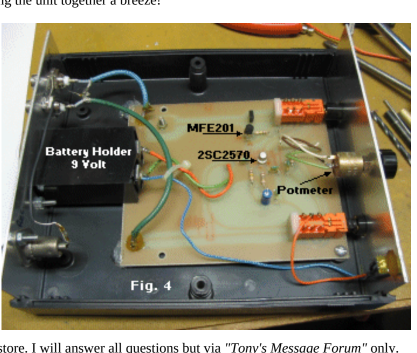

Types of Active Antennas

The RF preamplifier section of an active antenna may be of several different styles. A fixed-tuned preamp has the greatest gain for the specific frequency of operation, but is limited to only that frequency. A variable-tuned amplifier can be peaked within a range of frequencies, but the circuitry is more complex and expensive and tuning requires constant resetting whenever the receiver frequency is changed. A broadband preamplifier doesn't require any tuning, making it very versatile and easy to use, but has less gain at any specific frequency. The AA-7 described here, for simplicity and low cost, is of a dual broadband design.

I fully support this project. since my unit has been in operation for quite a few years now and still running on the same battery. Power consumption if minimum. Most parts can be obtained via your local electronics store. I will answer all questions but via *"Tony's Message Forum"* only. This Forum can be accessed via the main page, gadgets, or circuits page.

Back to Circuits page

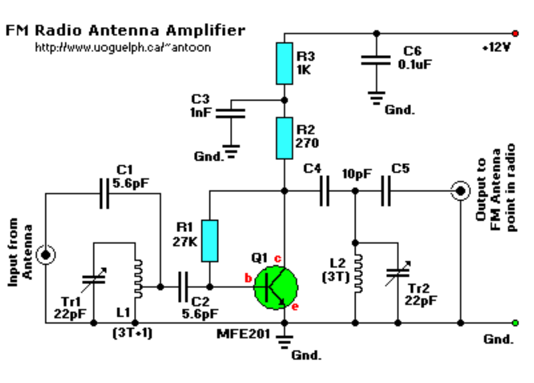

Active FM-Amplifier:

With only a small handfull of parts you can built this trusty FM Amplifier. It works with only 1 UHF/VHF type transistor, MFE201. This amplifier will pull in all distant FM stations clearly. The circuit is configured as a common-emitter tuned RF pre-amplifier wired around VHF/UHF transistor MFE201. There are a couple other models that probably would work too, like the NTE107, 2SC2570, etc. but I have not tried it.

Adjust capacitor trimmers C1 and C2 for maximum gain. Input coil L1 consists of 4 turns of 20SWG enamelled copper wire over a 5mm diameter former. It is tapped at the first turn from ground lead side. Coil L2 is similar to L1, but has only three turns. Pin configuration is shown in the diagram.

Source: "Popular Electronics" magazine, Copyright © Gernsback Publications, Inc. 1996. (Gernsback is no longer in business).

Back to Circuits page

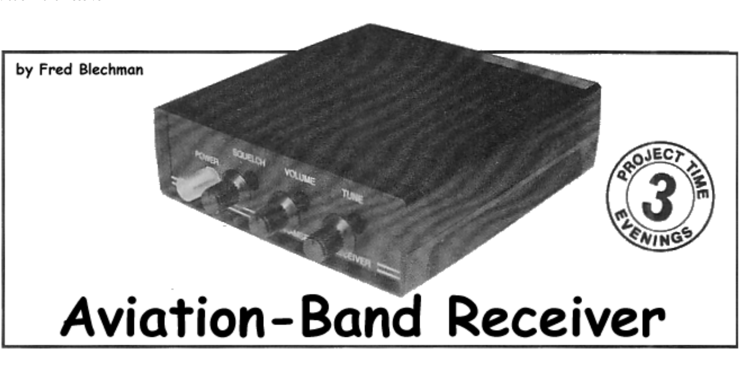

"Join a growing crowd of DX' listening enthusiasts who regularly tune in commercial air-to-ground and ground-to-air aeronautics communications. I build this one for my grand daughter!"

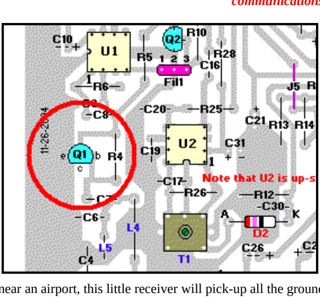

ERROR FIX!: I found a really bad error while checking the circuit board against the diagram. Q1 was drawn incorrectly both on the PCB and LayOut, which resulted in Q1 (NTE107/2SC2570) doing nothing at all since the base(b) was connected to ground. Both pcb and layout are corrected. Please click on the 'refresh' button of your browser to get the latest fix. Apologies for the error. Click **[HERE]** how to fix it.

If, like many scanner enthusiasts and ham operators, you are interested in listening in on all the excitement manifest in aeronautic communication, but lack the equipment to pursue your interest, then maybe the *Aviation-Band Receiver* described in this article is for you. The Aviation Receiver, designed to tune the 118-135MHz band, features exceptional sensitivity, image rejection, signal-to-noise ratio, and stability. The receiver is ideally suited to listening in on ground and air communication associated with commercial airlines and general aviation.
Powered from a 9-volt alkaline battery, it can be taken along with your to local airports so that you won't miss a moment of the action. And even if you're nowhere near an airport, this little receiver will pick-up all the ground-to-air and vice-versa communications of any plane or ground facility within about 100 miles (160Km)!

Circuit Description:

Figure 1 shows a schematic diagram of the Aviation Receiver--a super heterodyne AM (Amplitude Modulated) unit built around four IC's: an NE602 double balanced mixer (U1), an MC1350 linear IF amplifier (U2), an LM324 quad op-amp (U3), and an LM386 audio amplifier (U4).
In operation, an antenna that plugs into J1 picks up the AM signal. That signal is then coupled through C1 to a three-section, tuned-filter network consisting of L1-L5 and C2-C6. Signals in the 118-135Mhz VHF (Very High Frequency) range are coupled through C7 to a VHF transistor (Q1), where the signals are amplified. From there, the signals are fed through C8 to the input of U1 (the NE602 double balanced mixer), which in this application serves as a local oscillator. A variable inductor (L6) and its associated capacitor network set the local oscillator frequency 10.7-MHz higher than the incoming 118-135MHz signals. A tuning network , consisting of varactor diode D1 and potentiometer R1, allows the local-oscillator frequency to be tuned across about 15MHz.
The 10.7-MHz difference between the received signal and the local-oscillator frequency (i.e., the Intermediate Frequency or IF) is output at pin 4 of U1 to a 10.7-MHz ceramic filter (FIL1). The filter is used to ensure a narrow pass band and sharp signal selectivity.
The output of FIL1 is amplified by Q2 and then fed through C16 to U2 (an MC1350 IF amplifier), which, as configured, also offers Automatic Gain Control (AGC), as we'll see shortly. The amplified 10.7-MHz IF signal is peaked using variable transformer T1. The AM audio is then demodulated by diode D2. After that, the audio is fed in sequence through the four section of U3(an LM324 quad op-amp).
Note that a portion of U3-a's output signal is fed back through resistor R25 to the AGC-control input of U2 at pin 5. That signal is used to automatically decrease the gain of U2 when strong signals are present or to automatically increase U2's gain for weak signals. That keeps the output volume of the circuit within a comfortable listening range regardless of the strength of the incoming signals.
The receiver circuit also contains a squelch circuit that is controlled by potentiometer R3, which is used to kill random noise below a selected threshold level. When properly set, the squelch control virtually eliminates background noise, so that all you near are incoming signals that can be brought up to a usable level. Potentiometer R2 controls the overall volume fed through C26 to U4, an LM386 low-voltage audio amplifier. Due to the overall design and squelch control, the audio output is quite low in background noise, and yet it's capable of driving simple communications speaker or earphones to excellent volume levels.

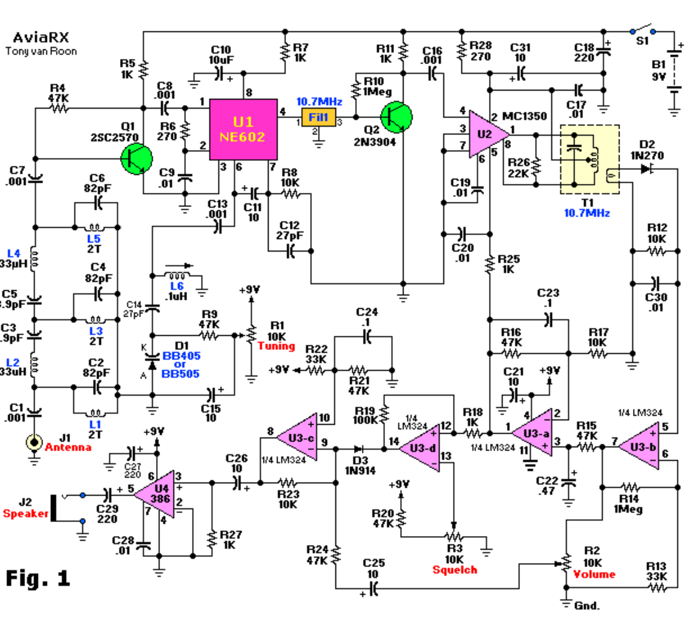

Construction:

The Aviation Receiver was assembled on a Printed Circuit Board, measuring about 4-1/2 x 5-1/4 inches. **Fig. 2** shows a full-size template of that printed circuit board's layout.
Although most of the parts for this project are commonly available through conventional electronic component suppliers, a source for some of the more difficult to find parts is given in the Parts List for those who prefer to do their own shopping. If you opt to gather your own parts or your plan to use what you have on hand, keep in mind that the circuit-board layout was designed to accommodate components of specific dimensions in some cases; jacks J1 and J2, switch S1, transformer T1, and all three potentiometers, for example. However, the potentiometers can be any model if you wish. Just wire them to the board.
Also note that either of the Siemens parts specified in the Parts list for varactor diode D1 will work, but both may be difficult to find from hobbyist sources. However, the second unit (BB505) is available from *Allied Electronics*.
However you go about collecting parts for this project, don't even think about building the receiver circuit without the printed-circuit board. At the component level, a circuit board is a must to ensure proper operation and for trouble-free performance.
Once you have obtained all of the components and the board for the Aviation Receiver, construction can begin. A parts-placement diagram is shown in **Fig. 3**. When assembling the project, take special care that polarity-sensitive components (electrolytic capacitors [keep leads as short as possible], diodes, and transistors) are installed properly. Just one part installed *backward* can cause grievous harm!
Inductors (Aircoils) L1,L3,L5 can be made easily on a 5mm drillbit. Before you wind them, scrape the enamel of each end, about 5mm. Then wind the 1.5 turn. I know it can be tricky especially if you have big fingers like me. Begin by installing the passive components (6 jumper wires, sockets, resistors, capacitors, inductors). Followed by installing the active components; diodes, transistors, and IC's. Once the active components have been installed, check your work for the usual construction errors; cold solder joints, misplaced or reversed-lead components, solder bridges, etc. Once you have determined that he circuit has been correctly assembled, it's time to consider the enclosure that will house the receiver.
The receiver's circuit board can be housed in any enclosure that you choose. Use the picture at the top of this project as an example if you wish. The antenna for the Aviation receiver can be as simple as a 21-inch length of wire or telescopic antenna, or you can get a fancy roof-mounted aviation antenna. If you are near an airport, you'll get plenty of on-the-air action from the wire or telescopic antenna. But if you're more than a few miles away, a decent roof-mount (or scanner) antenna offers a big improvement.

Alignment & Adjustment:

Aligning the Aviation receiver consists of nothing more than adjusting the slug in the local-oscillator coil (L6) for the center of the desired tuning range, and peaking the IF transformer (T1). the receiver can be calibrated using a VHF RF signal generator, frequency counter, or another VHF receiver by setting R1 to its mid-position; remember that you want to set the local-oscillator frequency 10.7-MHz higher than the desired signal or range to be received. Then, using a non-metallic alignment tool--a metal tool of any kind will drastically detune the coil, making alignment almost impossible--adjust L6 (the LO coil) until you hear aircraft or aircraft communications. Once you're receiving aircraft or airport frequencies, adjust T1 for the best reception. Typically, T1 is adjusted 2-3 turns from the top of the shield can. If you don't have any signal-reference equipment or alignment, and are not yet hearing airplanes, your best bet is to pack-up the receiver and the necessary alignment tools, and head for the nearest airport! If the airport has no control tower, visit a general aviation center on the airport grounds, and ask which are the most active frequencies. Then adjust L6 and R1 until you hear the action. It should be obvious that alignment will test your patience if you do not live near a large airport. A ground-service operator or private pilot may be willing to give you a brief test transmission on the 122.8 Unicom frequency. Remember also, that if your airport has ATIS transmissions, you can get a steady test signal as soon as you are within line-of-sight of its antenna. (See the explanation of Unicom and ATIS down the bottom of this document).

Troubleshooting Suggestions:

If the receiver does not work at all, carefully check the obvious things first; battery wires and switch, and the connections to the speaker jack. Also, be sure to check that you've correctly installed all of the jumpers. If the circuit's operation is erratic, a solder connection is usually the culprit, or there could be break in the antenna or speaker wire.
Pay special attention to the orientation of all IC's, transistors, diodes, and electrolytic capacitors. Also, be sure that C11 and C12 in U1's oscillator circuit are of the right values. Local-oscillator operation can be verified with a simple VHF receiver or frequency counter. Remember that the local oscillator should be set to a frequency 10.7-MHz above the desired listening range. If the oscillator works, only a defective or incorrectly installed part can prevent the rest of the receiver circuit from functioning.

What You Can Expect to Hear:

No matter where you live, you will be able to receive at least the airborne side of many air-traffic communication. If you know where to tune, you can hear any aircraft that you can see, plus planes a hundreds miles away and more, since VHF signals travel "line-of-sight".
Similarly, whatever ground stations you may hear are also determined by the line-of-sight character of VHF communication. If there are no major obstacles (tall buildings, hills, etc.,) between your antenna and an airport, you'll be able to hear both sides of many kinds of aviation communication. Be prepared for them to be fast and to the point, and for the same airplane to move to several different frequencies in the span of a few minutes!
At most metropolitan airports, pilots communicate with the FAA on a "Clearance Delivery" frequency to obtain approval or clearance of the intended flight plan, which is done before contacting ground control for taxi instructions.
From the control tower, ground movements on ramps and taxi ways are handled on the Ground Control Frequency, while runway and in-flight maneuvers near the airport (takeoffs, local traffic patterns, final approaches, and landings) are on the Tower Frequency. ATIS, or "Automatic Terminal Information System", is a repeated broadcast about basic weather information, runways in use, and any special information such as closed taxiways or runways. Such broadcast offers an excellent steady signal source for initial adjustment of your receiver, if you are close enough to the airport to receive ATIS.
Approach Control and Departure Control are air-traffic radar controller that coordinate all flight operations in the vicinity of busy metropolitan-airport areas. When you hear a pilot talking with "Jacksonville Center" or "Indianapolis Center", these are regional ATC (Air Traffic Control) centers. The aircraft is really en-route on a flight, rather than just leaving or approaching a destination. A pilot will be in touch with several different Regional Centers" during a cross-country flight.
Airports without control towers rely on the Unicom frequency for strictly advisory communications between pilot and ground personnel, such as fuel service operators. The people on the ground can advise the pilot what they know about incoming or outgoing aircraft, but the pilot remains responsible for landing and takeoff decisions. Typical Unicom frequencies are 122.8 and 123.0MHz.
The FAA's network of FSS (Flight Service Stations) keeps track of flight plans, provides weather briefings and other services to pilots. Some advisory radio communication takes place between pilots and a regional FSS. If there is an in your local area, but no airport control towers, the FSS radio frequency will stay interesting.

Pilot and Controller Talk:

Just to make sure you have a basic understanding of aviation chit-chat, here are a couple of examples what you may be hearing on your receiver. Don't blame the Aviation Receiver if all you hear are short bursts of words that don't make a lot of sense at first. Aviation communication is necessarily and brief, but clear and full of meaning. Generally, pilots repeat exactly what they hear from a controller, so that both know the message or instructions were correctly interpreted. If you are listening in , it's hard to track everything said from a cockpit, particularly in big city areas. Just to taxi, takeoff, and fly a few minutes, all on different frequencies.
Here's the meaning of just a few typical communications:
"Miami Center, Delta 545 heavy out of three-zero-five." Delta Flight 545 acknowledges Miami Center's clearance to descend from 30,000 feet to 25,000 feet. The word "heavy" means that the plane is a Jumbo-Jet, perhaps a 747, DC-10, or LT-1011.
"Seneca 432 Lima cleared to outer marker. Contact tower 118.7" The local Approach Control is saying that the Piper Seneca with the N-number, or "tail-number" ending in "432-L" is cleared to continue flying an instrument approach to the outer marker (a precision radio beacon located near the airport), and should immediately call the airport radio control tower on 118.7 MHz. That message also implies that the controller does not expect to talk again with that aircraft.
"Cessna 723, squawk 6750, climb and maintain five thousand". A controller is telling the Cessna pilot to set the airplane's radar transponder to code "6750", and climb to and level off at the altitude of "5000 feet".
"United 330, traffic at 9 o'clock, 4 miles, altitude unknown." The controller alerts the United Airlines flight of radar contact with some other aircraft off to the pilot's left at a "9 o'clock" position. Since the unknown plane's altitude is also unknown, both controller and pilot realize that it is a smaller private plane not equipped with altitude-reporting equipment.

Parts List and other components:

Semiconductors: KIT available: **[KIT-1]**

```
U1 = NE602AN, or SA602AN (see note 1)
U2 = MC1350 or NTE746
U3 = LM324 or NTE987
U4 = LM386 or NTE823
Q1 = 2SC2570, or NTE107, (Different Pinouts--click here!) NPN UHF silicon transistor
Q2 = 2N3904, or NTE123AP, NPN transistor
D1 = BB405,BB505,(MV2104/NTE612) varactor diode (see note 2)
D2 = 1N270, or NTE109, 1N34, etc. Germanium Diode
D3 = 1N914,NTE519,ECG519, or BAX13 silicon signal diode.
```

Resistors: KIT available: **[KIT-2]**

```
All Resistors are 5%, 1/4-watt
              R1,R2,R3 = 10K PC mount potentiometers
R4,R9,R15,R16,R20,R21,R24 = 47K
    R5,R7,R11,R18,R25,R27 = 1K
                   R6,R28 = 270 ohm
         R8,R12,R17,R23 = 10K
                  R10,R14 = 1 Mega Ohm
                  R13,R22 = 33K
                      R19 = 100K
                      R26 = 22K
```

Capacitors: KIT available: **[KIT-3]**

```
       C1,C7,C8,C13,C16 = 0.001µF, (1nF)ceramic disc
                  C2,C4,C6 = 82pF, ceramic disc
                     C3,C5 = 3.9pF, ceramic disc
  C9,C17,C19,C20,C28,C30 = 0.01µF, ceramic disc
C10,C15,C21,C25,C26,C31 = 4.7 TO 10µF, 16WVDC, electrolytic
                       C11 = 10pF, ceramic disc
                   C12,C14 = 27pF, NPO ceramic disc
           C18,C27,C29 = 100 to 220µF, 16WVDC, electrolytic
                       C22 = 0.47µF, 16WVDC, electrolytic
                   C23,C24 = 0.1µF, 16WVDC, electrolytic
```

Inductors: KIT available: **[KIT-4]**

```
L1,L3,L5 = 1.5 turns #24 to #30 gauge magnet wire (aircoils),
           5mm inner diameter, about 1mm spacing.
   L2,L4 = 0.33µH, molded inductor, *(DigiKey M9R33-ND, or M7807-ND)
           *M9R33-ND is Phenolic and more expensive. M7807-ND is Epoxy coated.
           or Miller #9230-08
      L6 = 0.1µH, 3.5 turns, slug-tuned coil (DigiKey TK2816ND) or TOKO
           #E528SN-100061 (orange, see picture)
           this tiny coil only measures 9x7mm.
      T1 = 10.7MHz, shielded transformer (Mouser 42IF123)
     FL1 = 10.7 MHz, ceramic filter (DigiKey TK-2306)
```

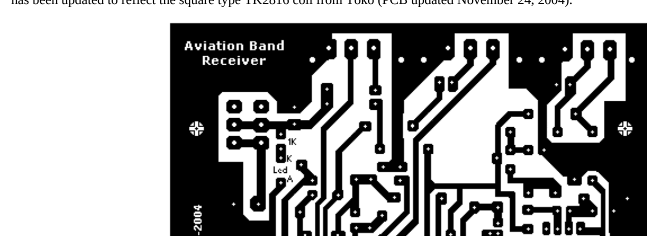

```
A complete KIT is available for all of the above. [KIT-C]
NO battery+holder or enclosure is included.  Shipping to USA and Canada only. email me for details or if you wish to
be on the mailing list for updates and modifications: meridian@kitchener.com
```

Additional Parts & Materials:

```
  S1 = SPST switch, PC mount
  J1 = RCA jack, PC mount
  J2 = Subminiature phone jack, PC mount
  B1 = 9-volt alkaline battery
MISC = PCB materials, enclosure, battery holder and connector,
       wire, solder, knobs for potentiometers R1/R2/R3, etc.
 KIT = Kit is now available.
```

Printed Circuit Board (PCB) **Fig. 2**, and Parts Assembly diagram (layout) is shown in **Fig. 3** to make soldering the unit together a breeze!
Note: PCB pads for the ceramic 10.7MHz filter (FL1) have been modified. The filter should fit perfectly now. Also, L6 in the parts layout diagram has been updated to reflect the square type TK2816 coil from Toko (PCB updated November 24, 2004).

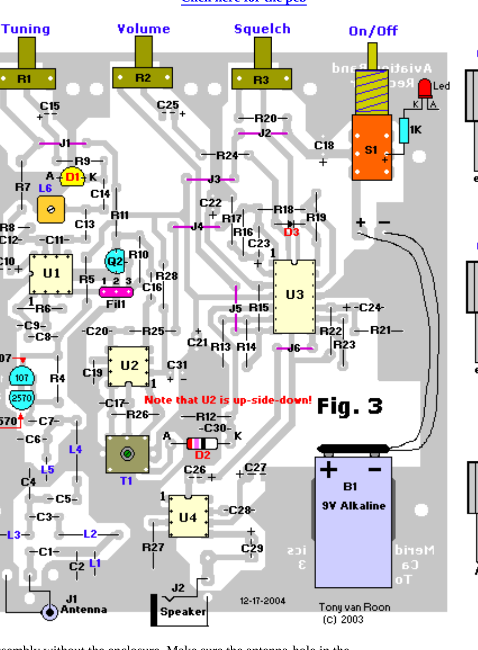

Click here for the pcb

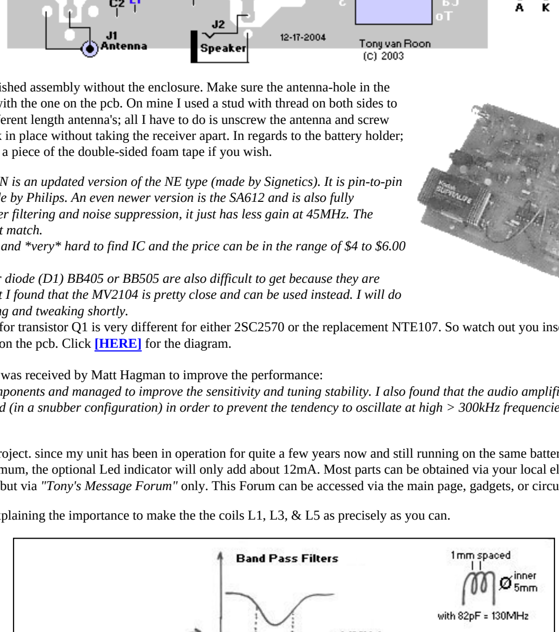

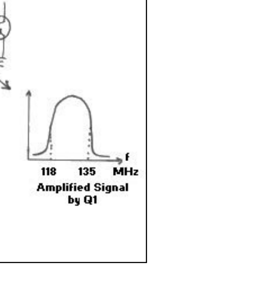

Fig. 4. shows the finished assembly without the enclosure. Make sure the antenna-hole in the enclosure is in-line with the one on the pcb. On mine I used a stud with thread on both sides to enable me to use different length antenna's; all I have to do is unscrew the antenna and screw another antenna back in place without taking the receiver apart. In regards to the battery holder; you can also just use a piece of the double-sided foam tape if you wish.

Note 1: *The SA602AN is an updated version of the NE type (made by Signetics). It is pin-to-pin compatible, and made by Philips. An even newer version is the SA612 and is also fully compatible with better filtering and noise suppression, it just has less gain at 45MHz. The SA602AN is a perfect match.*
*The NE602 is a rare and *very* hard to find IC and the price can be in the range of $4 to $6.00 in US currency.*
Note 2: *The varactor diode (D1) BB405 or BB505 are also difficult to get because they are already obsolete. But I found that the MV2104 is pretty close and can be used instead. I will do some more fine-tuning and tweaking shortly.*
Note 3: The pin-out for transistor Q1 is very different for either 2SC2570 or the replacement NTE107. So watch out you insert the correct lead into the correct hole on the pcb. Click **[HERE]** for the diagram.

The following email was received by Matt Hagman to improve the performance:
"I tweaked a few components and managed to improve the sensitivity and tuning stability. I also found that the audio amplifier IC requires an 8ohm + 0.047uF load (in a snubber configuration) in order to prevent the tendency to oscillate at high > 300kHz frequencies." Good stuff Matt, thanks!

I fully support this project. since my unit has been in operation for quite a few years now and still running on the same battery. Power consumption is minimum, the optional Led indicator will only add about 12mA. Most parts can be obtained via your local electronics store. I will answer all questions but via *"Tony's Message Forum"* only. This Forum can be accessed via the main page, gadgets, or circuits page.

Below is a picture explaining the importance to make the the coils L1, L3, & L5 as precisely as you can.

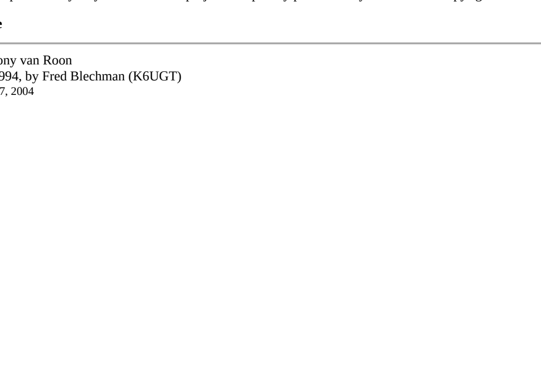

Click on the link to see the **[project and pictures]** of Agustin Sanchez, Canary Islands, Spain. Very nicely done, Agustin!

Some personal pictures showing a different kind of battery holder and a view of **[inductors L1/L3/L5]**.

Copyright and Credits:
Source: "Electronics Hobbyist Handbook", Spring 1994. Copyright © Fred Blechman and Gernsback Publications, Inc. 1994. (Gernsback Publishing is no longer in business).
Document updates & modifications, all diagrams, PCB/Layout, (C) Copyright by Tony van Roon.
Re-posting or taking graphics in any way or form of this project is expressly prohibited by international copyright laws.

Back to Circuits page


Cut tracks here
b
c
e
fold 'b' to this pad and solder
fold 'c' to this pad and solder

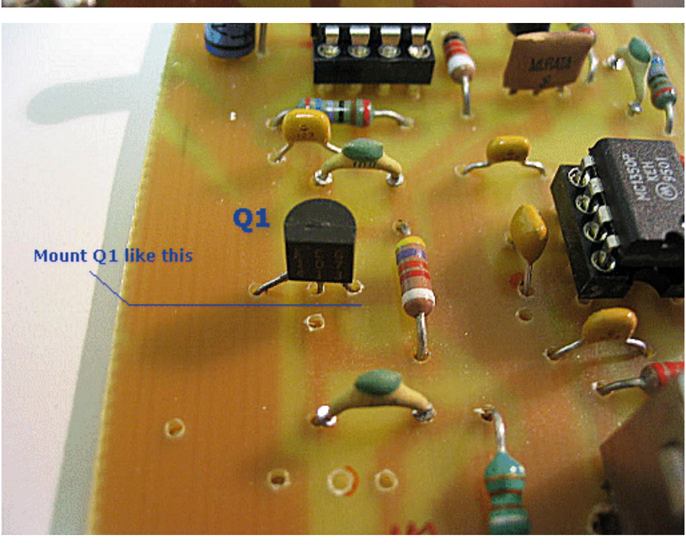
Q1
Mount Q1 like this

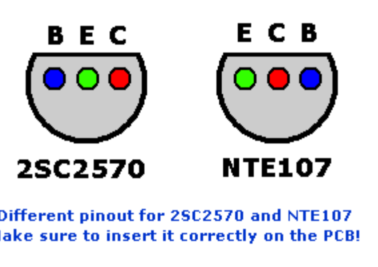
B E C
E C B
2SC2570
NTE107
Different pinout for 2SC2570 and NTE107
Make sure to insert it correctly on the PCB!

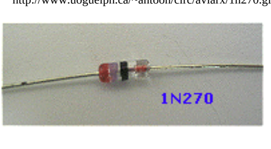
1N270

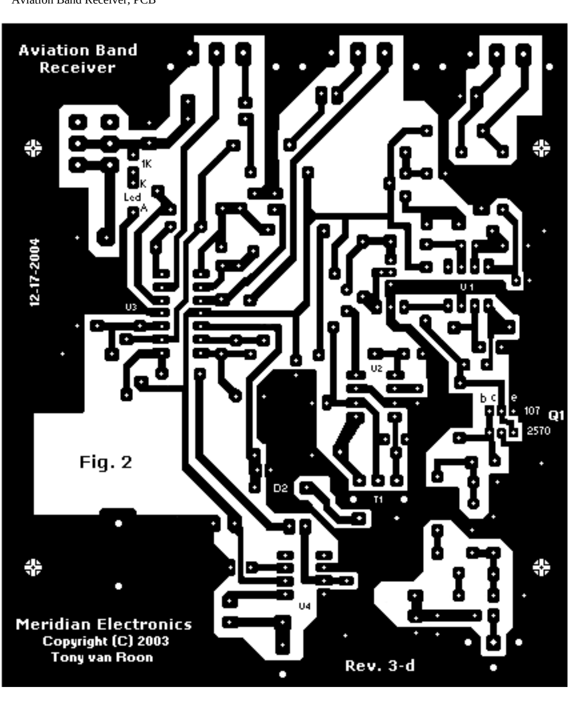
Aviation Band Receiver
12-17-2004
1K
K
Led
A
U3
U1
U2
b c e
107
Q1
2570
Fig. 2
D2
T1
U4
Meridian Electronics
Copyright (C) 2003
Tony van Roon
Rev. 3-d

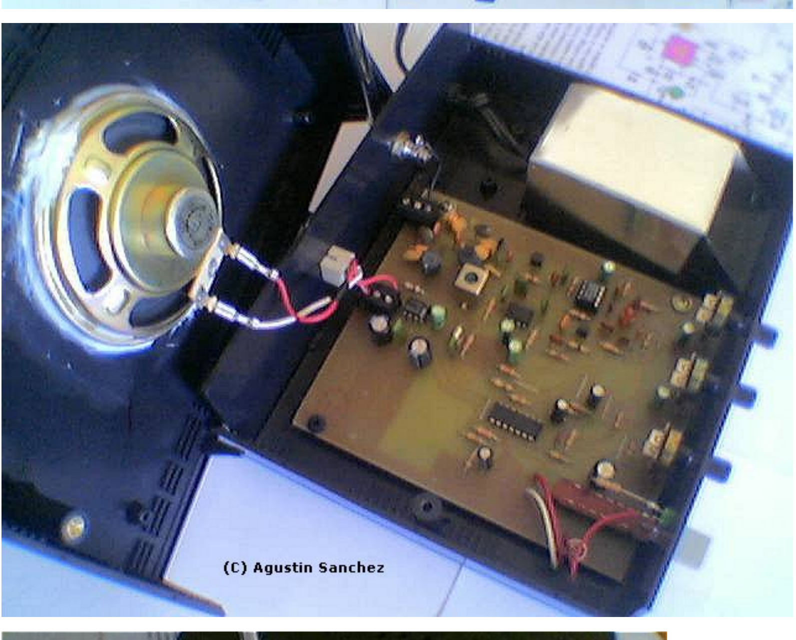

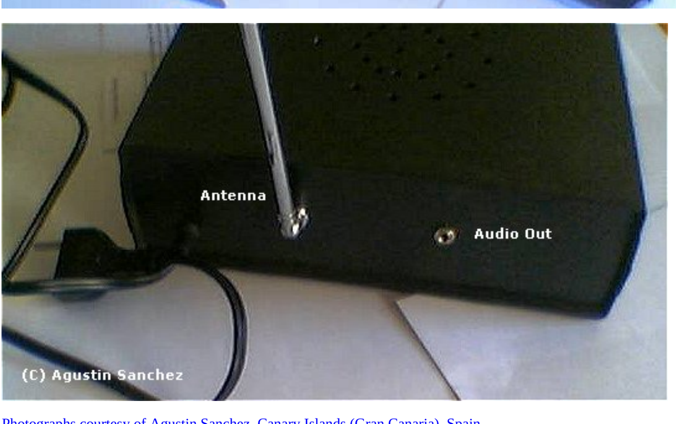

Photographs courtesy of Agustin Sanchez, Canary Islands (Gran Canaria), Spain.

Back to Circuits page

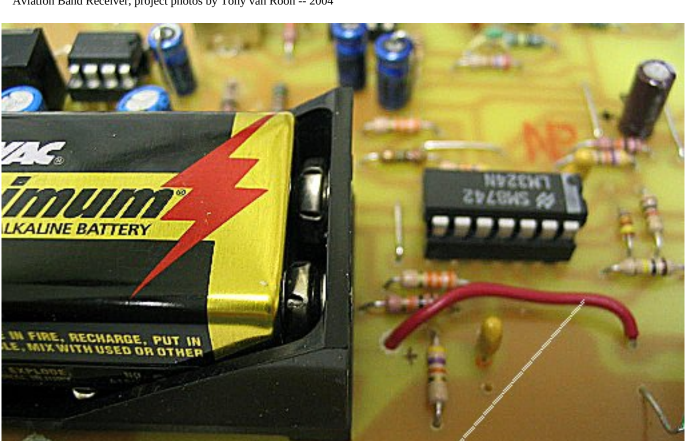

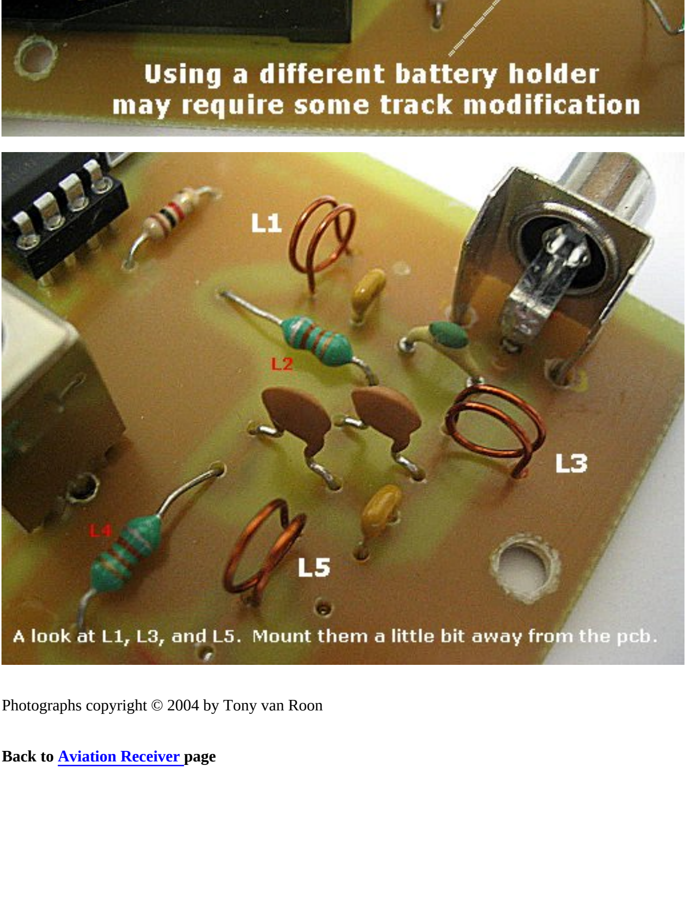

Back to [Aviation Receiver](http://www.uoguelph.ca/~antoon/circ/aviarx) page

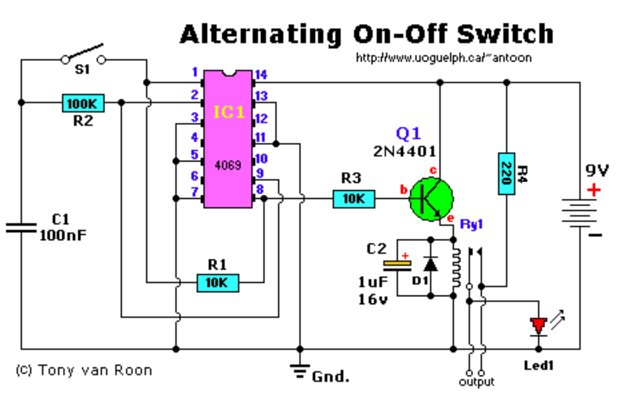

ERROR FIX: The LED (Led1) was drawn up-side-down. Fixed.

Parts List
Resistors are carbon, 1/4 Watt, 5% tolerance.

```
  R1 = 10K
  R2 = 100K
  R3 = 10K
  R4 = 220 Ohm (optional)
  C1 = 0.1µF, Ceramic (100nF)
  C2 = 1µF/16V, Electrolytic
  D1 = 1N4001 (see text)
Led1 = Led, 3mm, red (optional)
  Q1 = 2N4401 (see text)
 IC1 = 4069, CMOS, Hex Inverter (MC14069UB), or equivalent
  S1 = Momentary on-switch
 Ry1 = Relay (see text)
```

Use this circuit instead of a standard on-off switch. Switching is very gentle. Connect unused input pins to an appropriate logic level (I used ground). Unused output pins *MUST* be left open!
First 'push' activates the relay, another 'push' de-activates the relay.

IC1, the MC14069 (or 4069) is a regular Hex-inverter type and is constructed with MOS P-channel and N-channel enhancement mode devices in a single monolithic structure. It will operate on voltages from 3 to 18 volts, but most applications are in the 5 to 15 volts. Although the 4069 contains protection circuitry agains damage from ESD (Electro Static Discharge), use common sense when handling this device. Depending on your application you may want to use an IC-socket with IC1. It makes replacement easy if the IC ever fails.

You can use any type of 1/4 watt resistors including the metal-film type.

The type for D1 in not critical, even a 1N4148 will work. But, depending on your application I would suggest a 1N4001 (or similar) as a minimum.

Any proper replacement for Q1 will work, including the european TUN's. Since Q1 is just a driver to switch the relay coil, almost any type for the transistor will do. PN100, NTE123A, 2N3904, 2N2222, 2N4013, etc. will all work.

For C2, if you find the relay acts not fast enough, you can change it to a lower value or use a ceramic cap of around 0.1µF. It is there as a spark-arrestor together with the diode (D1).

For the relay I used a 6 volt type with the above circuit and 9 volt battery. The circuit will work fine with 12 Volt, the only thing to watch for is the working voltage of C2; increase that to 25V if you use a 12V supply.

I added the Led to have a visual indication of being 'on'. For use with 12V supply make R4 390 ohms. The LED and R4 are of course optional and can be left out. Your application may already have some sort of indicator and so the LED and R4 are not needed.

Back to Circuits page

Audio Booster

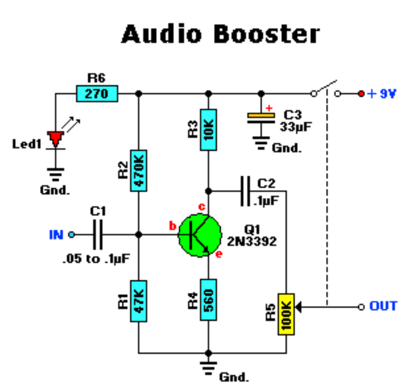

Parts List:

Part	Description	Radio Shack #	DigiKey #	Notes
Q1	2N3392			Transistor, NPN
R1	47K resistor			yellow purple orange gold
R2	470K resistor			yellow purple yellow gold
R3	10K resistor			brown black orange gold
R4	560 Ohm resistor		560QBK-ND	green blue brown gold
R5	100K potmeter+switch			Linear
R6	270 ohm resistor			red purple brown gold
LED1	LED, red	276-033		Ultra-Bright
C1	Capacitor, .05-.1µF			Ceramic, 50V type
C2	Capacitor, 0.1µF			Ceramic, 50V type
C3	Capacitor, 33µF/25V			Electrolytic

Couple Notes:
The 2N3392 transistor is a low-noise type in a TO-92 housing and can be replaced by a NTE199 or ECG199. If you wish to use a TUN, cross reference the parameters with one of the units from this list: **TUP-TUN**
Potentiometer R5 of 100K is a linear type with an on/off switch attached.
The value of C1 may need to be between 0.05µF and 0.1µF (47nF/100nF). Experiment with the value for best performance.

The phone number for DigiKey is 1-800-Digi-Key.

Back to Circuits Page

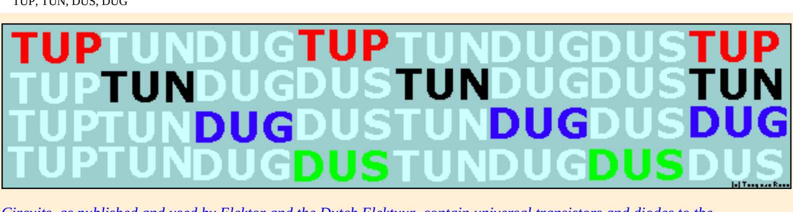

Circuits, as published and used by Elektor and the Dutch Elektuur, contain universal transistors and diodes to the abbreviations: TUP (Transistor Universal Pnp), TUN (Transistor Universal Npn), DUS (Diode Universal Silicon), and DUG (Diode Universal Germanium). Many transistors and diodes fit this way in these categories and makes component selection easier. Good system!

Table 1a.	Transistors					
	Type	U_{ceo} (max)	I_c (max)	h_{fe} (min)	P_{tot} (max)	f_T (min)
TUN	NPN	20Volt	0.1 Amp	100	0.1 Watt	100 Mhz
TUP	PNP	20Volt	0.1 Amp	100	0.1 Watt	100 Mhz

The minumum specifications have to be met, in Table 1a above, before you can call it a 'TUP' or a 'TUN'.

Table 1b.	Diodes					
	Type	U_R (max)	I_F (max)	I_R (max)	P_{tot} (max)	C_D (max)
DUS	Si	25 Volt	0.1 Amp	1 uAmp	0.25 Watt	5 pF
DUG	Ge	20 Volt	0.035 A	100 uAmp	0.25 Watt	10 pF

The minumum specifications have to be met, in Table 1b above, before you can call it a 'DUS' or a 'DUG'.

Table 2. TUN (NPN)		
BC107	BC208	BC384
BC108	BC209	BC407
BC109	BC237	BC408
BC147	BC238	BC409
BC148	BC239	BC413
BC149	BC317	BC414
BC171	BC318	BC547
BC172	BC319	BC548
BC173	BC347	BC549
BC182	BC348	BC582
BC183	BC349	BC583
BC184	BC382	BC584
BC207	BC383	

Table 3. TUP (PNP)		
BC157	BC253	BC416
BC158	BC261	BC417
BC159	BC262	BC418
BC177	BC263	BC419
BC178	BC307	BC512
BC179	BC308	BC513
BC204	BC309	BC514
BC205	BC320	BC557
BC206	BC321	BC558
BC212	BC322	BC559
BC213	BC350	
BC214	BC351	
BC251	BC352	
BC252	BC415	

In the above tables, Table 2 & 3, you can use several different transistor types for a TUP or a TUN. Obviously the tables are not complete. It would be almost impossible to list all available transistor types available today. From the above listed types are all A, B, or C types usable.

Table 4. DUS		DUG
BA127	BA318	OA85
BA217	BAX13	OA91
BA218	BAY61	OA95
BA221	1N914	AA116
BA222	1N4148	
BA317		

Several different types of diodes are suitable as a 'DUS' or 'DUG'.

Table 6.	NPN	PNP
	BC107 BC108 BC109	BC177 BC178 BC179
U_{ceo} (max)	45 V 20 V 20 V	45 V 25 V 20 V
U_{ebo} (max)	6 V 5 V 5 V	5 V 5 V 5 V
I_c (max)	100 mA 100 mA 100 mA	100 mA 100 mA 50 mA
P_{tot} (max)	300 mW 300 mW 300 mW	300 mW 300 mW 300 mW
f_T (min)	150 Mhz 150 Mhz 150 Mhz	130 Mhz 130 Mhz 130 Mhz
F (max)	10 dB 10 dB 4 dB	10 dB 10 dB 4 dB
(A), (B) or (C) added to transistor type: (A) = hfe 125 to 260 (B) = hfe 240 to 500 (C) = hfe 450 to 900		

The most important parameters of the BC107...BC109 and the BC177...BC179. These transistors have been choosen as an example of information.

Table 5. Row 1				Row 2				Row 3			
NPN	PNP	Case	Note	NPN	PNP	Case	Note	NPN	PNP	Case	Note
BC107 BC108 BC109	BC177 BC178 BC179			BC317 BC318 BC319	BC320 BC321 BC322		$I_{c\,max}$ = 150 mA	BC467 BC468 BC469			P_{max} = 220 mW
BC147 BC148 BC149	BC157 BC158 BC159		P_{max} = 250 mW	BC347 BC348 BC349	BC350 BC351 BC352			BC167 BC168 BC169	BC257 BC258 BC259		100/250: $I_{c\,max}$ = 50 mA
BC171 BC172 BC173	BC251 BC252 BC253		251....253 Noise Free	BC382 BC383 BC384				BC547 BC548 BC549	BC557 BC558 BC559		P_{max} = 500 mW
BC182 BC183 BC184	BC212 BC213 BC214		$I_{c\,max}$ = 150 mA	BC407 BC408 BC409	BC417 BC418 BC419		P_{max} = 250 mW	BC582 BC583 BC584	BC512 BC513 BC514		$I_{c\,max}$ = 200 mA
BC207 BC208 BC209	BC204 BC205 BC206			BC413 BC414	BC415 BC416		Noise Free		BC261 BC262 BC263		Noise Free
BC237 BC238 BC239	BC307 BC308 BC309			BC437 BC438 BC439			P_{max} = 220 mW	http://www.uoguelph.ca/~antoon			

The letter after the transistor indicates the hfe.
Example: BC107A, hfe = 125 ... 260
BC107B, hfe = 240 ... 500
BC107C, hfe = 450 ... 900

Substitutes within the BC series of transistors are also possible. In Table 6 you see that the transisors are grouped in three. Example, the BC107, BC147, BC317 and BC413 can be substituted with each other, but a BC548 may not be exchanged for a BC107. Why? The BC548 is the second of a group of three. Your choice would be a BC547(A,B, or C).

Back to Circuits or R/C Gadgets Page

Audio Pre-Amplifier

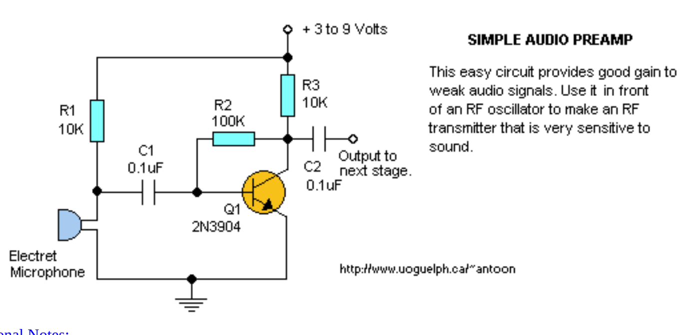

Additional Notes:
(N/A)

Back to Circuits page

Automatic 9-volt battery charger, by Jan Hamer.

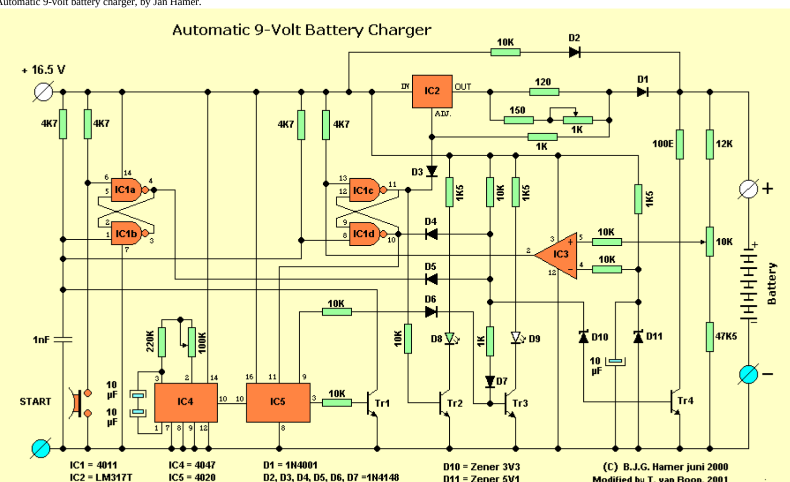

Published & Translated with permission of Jan Hamer, The Netherlands.

Good care given to your NiCad batteries will ensure a long life. However, they do need to be handled and charged with special care.

It is therefore important to first discharge the NiCad to 1 Volt per cell, ensure that the battery is discharged, and then start the charge cycle. Manufacturers recommend a charge current of 1/10th the capacity for a duration of about 15 hours uninterrupted.

In reality, we learn some hard lessons when we forget to switch the charger off after the 15 hours and find that one or more cells inside the battery no longer accept a charge. That is the very reason that the circuit above is fully automated.
The only thing to do is connect the battery and press the 'Start' button. When the discharge cycle is finished the circuit switches over to charge for 15 hours. After the 15 hours the circuits maintains a trickle charge to keep the battery 'topped-up'.

Before I go into the schematic details I like to explain some of the component descriptions in the schematic. Jan Hamer lives in the Netherlands and so the circuit details are based on european standards.
120E, 150E, etc. The '**E**' just stands for Ohms so 120 ohm, 150 ohm. The original circuit specified the HEF type of cmos IC's which are not readily available in most of Canada. So just get any other type of CMOS chip like the MC4011, MC4020, MC4047 from Motorola. Any other type will do fine too. The BC548B is replaceble by a NTE123AP (NOTE: make sure it is the 'AP' type, the regular NTE123A is a total different transistor), ECG123AP, and the 2N3904 will work also. Watch for the correct pin locations since the BCE may be reversed with this european type. The LM317T is a TO-220 type and replaceble with a ECG956 or NTE956. The LM339N can be replaced with a ECG834 or NTE834

Although this circuit looks quite impressive and maybe a bit difficult it is certainly not difficult to understand. The circuit needs to be hooked-up to a DC supply voltage of between 16.5 and max 17.5 volt, otherwise the CMOS IC's will go defective. Because I didn't feel like to design a seperate powersupply for this circuit I connected it to my fully adjustable bench top powersupply.
First we connect a 'to-be-charged' 9-volt nicad battery to the appropriate connections. Then hook it up to the powersupply. Upon connection the 1nF capacitor starts up the two RS Flip-Flops formed by IC1a, IC1b, IC1c, IC1d, and pulls pins 3 and 10 'high' and pins 4 and 11 'low'. The clock pulses are created by the free-running multivibrator IC4. IC4's frequency is determined by the 10uF capacitors, the 220K resistor and the 100K trimpot. The clock runs continuesly but the counter behind, IC5, is not counting yet because pin 11 (the master-reset) is kept high. When the 'START' button is pressed, output pin 4 from IC1a goes high and biases TR4, which is made visible by the Red LED (D9) which remains lit. The NiCad is now being discharged via this transistor and the 100 ohm resistor.
The 10K trimpot (at the right of the diagram) is adjusted in such a way that when the battery voltage dips below 7 volt, the output of IC3 goes LOW and the output pin 11 of IC1a HIGH. At hte same time the output pin 10 of IC1d goes LOW, and the red LED turns off.
Because output pin 11 went HIGH the green LED (D8) lights up and at the same time the voltage level rises causing the battery to be charged. The charge-current is determined by the 120 ohm, 150 ohm, and the trimpot of 1K, at the right side of IC2. Actually we could have used one resistor, but the output voltage of different brands for IC2 may differ, by about 1.25 volt. Because the charging current is devided by value of the resistors, with the trimpot the current can be adjusted to the correct value of your own 9-volt NiCad. (In my case, the battery is a 140 mA type, so the charge current should be adjusted for 14 mA (c/0.1).
At the same time the LOW of output pin 10 from IC1d starts the counter of the clock. On pin 9 of IC5 appear pulses which light up the red LED. This is implemented for two reasons, the clock-frequency can, with the 100K trimpot, be adjusted to the correct value; the red LED has to come ON for 6.59 seconds and for the same duration going OFF and except for that fact the green LED, who indicates the charge current, can be checked if the total charge-time is correct.
When the counter has reached 8192 pulses (x 6.59 = 53985.28 sec = 14.99 hours) the output pin 3 of IC5 goes high again, transistor Tr1 activates and resets the two flip-flops to the start position.
The charging process stops and goes over to trickle charge via the 10K resistor and the D2 diode and keeps the battery topped-up.
The adjustments of the project are really very simple and nothing to worry about. Turn the walker of the 10K pot in the direction of the 12K resistor, ground connection point of 10K resistor/diode D2, like the adjustment pin of IC2, apply a voltage of 7-volt to the battery connection terminals, switch the power ON and slowly turn the pot backward until the greeen LED starts to light up. Switch OFF the power and take away the connections you made to make the adjustment.
Insert an amp-meter between the battery and the output connection and again switch the power ON. The battery will, in case it is not completely empty, totally discharged (to a safe level) and as soon as the 7 volt margin is reached goes over to the charge cycle. The charge current is at this time adjusted via the 1K trimpot (which is connected in series with the 150 Ohm resistor and in parallel with the 120 ohm resistor) accurately to the desired value.
Addendum: It is strongly recommended to include small 100nF ceramic capacitors over the powersupply lines feeding EACH CMOS IC to keep possible interference to a negliable value.

If you have improved upon or know ways to improve it, Jan Hamer will appreciate your feedback. Klick on his name at the top of this page or contact him via his website specified below. Thanks!

Please visit Jan Hamer's website in the Netherlands!

Return to Circuits Page

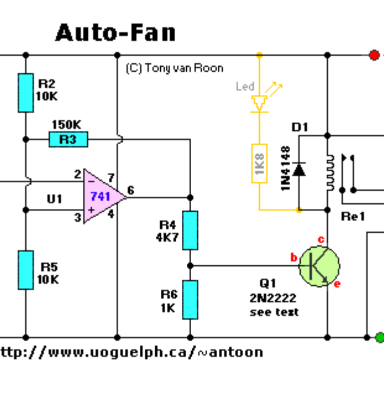

"This circuit was designed to automatically activate a set of three or four small DC fans to cool a large cool-rib for a 10 Amp powersupply. Can be used in a variety of other applications as well."

Table 1

Part	Description	Radio Shack	Digi Key	Newark	Notes
IC1	LM741 Op-Amp	276-007	LM741CN-ND	LM741CN	NE741,µA741, etc.
Q1	2N2222A transistor	276-2009	2N2222A-ND	2N3904	See text
D1	1N4148 Diode	276-1122	1N4148GICT-ND	1N4001	1N4001, or others
Th1	50K Thermistor		KC005T-ND	96F3309	KC005T in prototype
Re1	12V Relay	275-249	Z753-ND	83F8057	RS is 1A
R1	15K, 5% resistor			84N2487	brown-green-orange
R2,R5	10K, 5% resistor			84N2479	brown-black-orange
R3	150K, 5% resistor			84N2485	brown-green-yellow
R4	4K7, 5% resistor	271-1330		50N1628	yellow-purple-red
R6	1K, 5% resistor	271-1321		50N6012	brown-black-red
P1	100K Trimmer Pot		CT94P104-ND	44F3536	Cermet Multi-turn

Replacement Parts:

```
  Q1 = 2N3053, 2N3904, NTE123A, ECG123A, NTE128, ECG128, etc.
  D1 = 1N4001, NTE519, ECG519, NTE116 etc.
 Th1 = Thermistor, 22K - 100K.  Used 50K in prototype.
 Re1 = Relay.  A reed relay will work too.
```

Newark Electronics
Digi-Key
Radio Shack/Tandy

Radio Shack's pittyful selection of parts these days is a real headache. So I'm no longer gonna waste my time looking for partnumbers. Unless I'm sure they carry the part. Too bad...

Couple Notes:

Th1, the 50K thermistor, is a standard type. Mine was a bar or rectangular looking thingy. Available from Tandy/Radio-Shack. Almost any type will do. I experimented with different models from 22K to 100K and all worked fine after replacing the trimmer pot.
The one used in the above circuit diagram was a 50K model made by Fenwal (#197-503LAG-A01). This 50K was measured at exactly 25 °C and with 10% tolerance. The resistance increases as the surrounding temperature decreases. Tolerance for my application (cooling a large powersupply coolrib) is 10%. Another name for this thing is 'NTC'. NTC stands for "Negative Temperature Coefficient" which means when the surrounding temperature decreases the resistance of this thermistor will increase. You may have to shop around to get the cheapest price. Some thermistors can be had for as little as $4.00 but as much as $55.00 Canadian currency for the glass encapsulated type (the best).
I replaced my thermistor for a 60K hermetically sealed glass type since the environment for my application may contain corrosive particles which may affect performance on a future date.

P1 is a regular Bourns trimmer potentiometer and adjusts a wide range of temperatures for this circuit. I used the 10-turn type for a bit finer adjustment but the regular type may work for your application.

R1 is a 'security' resistor just in case the trimmer pot P1 is adjusted all the way to '0' ohms. At which time the thermistor would get the full 12 volt and it will get so hot that it puts blisters on your fingers... :-)
R3 feeds a bit of hysteresis back into the op-amp to eliminate relay 'chatter' when the temperature of the thermistor reaches its threshold point. Depending on your application and the type you use for Q1 and Re1, start with 330K or so and adjust its value downwards until your satisfied. The value of 150K shown in the diagram worked for me. Decreasing the value of R2 means more hysteresis, just don't use more then necessary. Or temporarily use a trimmer pot and read off the value. 120K worked for me.

Transistor Q1 can be a 2N2222(A), 2N3904, NTE123A, ECG123A, etc. Not critical at all. It acts only as a switch for the relay so almost any type will work, as long as it can provide the current needed to activate the relay's coil.

D1, the 1N4148, acts as a spark arrestor when the contacts of the relay open and eliminates false triggering. For my application the 1N4148 was good enough since the tiny relay I used was only 1 amp. However, you can use a large variety of diodes here, my next choice would be a regular purpose 1N4001 or something and should be used if your relay type can handle more then 1 amp.

If you like to make your own pcb, try the one below. The pcb is fitted with holes for the relay but may not fit your particular relay. It was designed for a Aromat HB1-DC12V type. The variety and model of relays is just to great. How to mount it then? Well, I left ample space on the pcb to mount your relay. You can even mount it up-side-down and connect the wires individually. Use Silicon glue, cyanoacrylate ester (crazy glue), or double-sided tape to hold the relay in place. Works well. Note that the pcb and layout is not according to the circuit diagram in regards to the hookup of the fans. The PCB measures approximately 1.5 x 3 inches (4.8 x 7.6mm) If you print the pcb to an inkjet printer it is probably not to scale. Try to fit a 8-pin ic socket on the printed copy to make sure it fits before making the pcb...

Click here for the PCB

Back to Circuits page

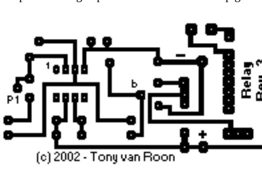
1
P1
b
Relay
Rev. 3
(c) 2002 - Tony van Roon

Basic IC MonoStable Multivibrator

by Tony van Roon

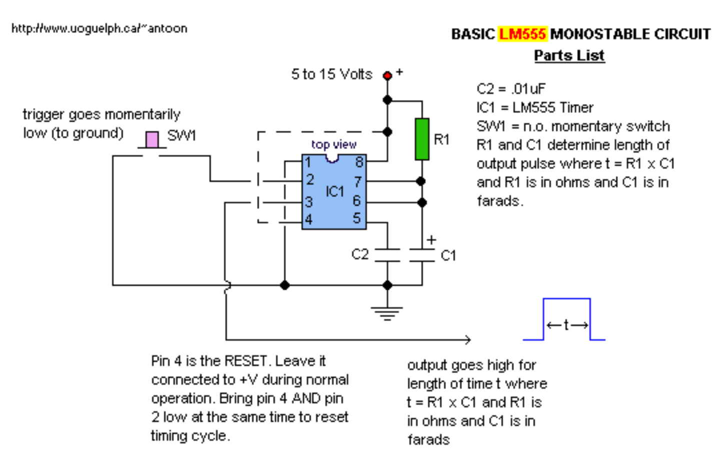

Back to Circuits page

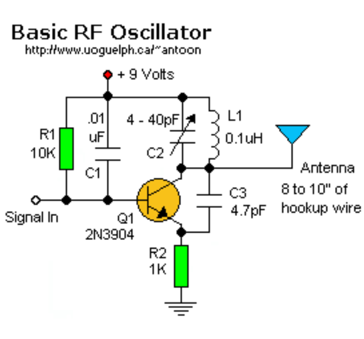

This basic circuit is easy to build and the components are not critical. Most of them can be found in your junk parts box. The L1 antenna coil can be made by close winding 8 to 10 turns of 22 gauge insulated hookup wire around a 1/4 inch form such as a pencil. You can experiment with the size of the coil and the number of turns to see how it affects the frequency and signal output of the oscillator. You should be able to pick up its signal with a standard FM radio receiver. The "Signal in" should be coupled by a disc capacitor of about 0.1uF to the stage in front of it.

Back to Circuits page

Led Flasher with the LM3909 IC

http://www.uoguelph.ca/~antoon

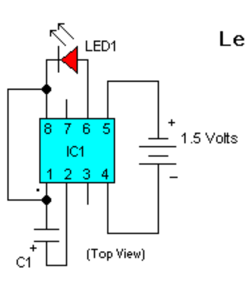

PARTS LIST

C1 = 100uF electrolytic capacitor
IC1 = LM3909 led flasher IC
LED1 = Red LED
Battery = 1.5 Volt AAA

Back to Circuits Page

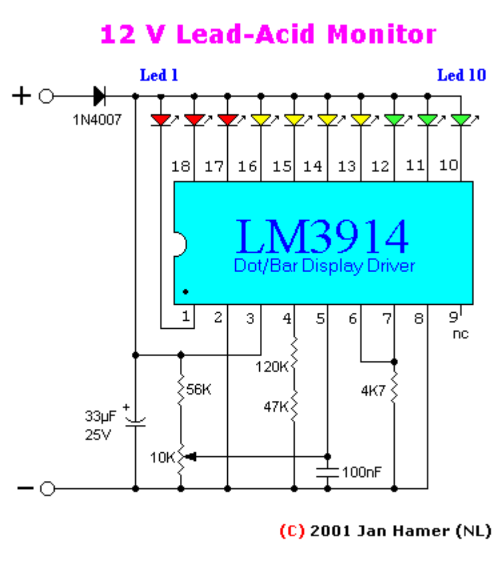

Posted with permission of Jan Hamer

This simple circuit makes it posible to monitor the charging process to a higher level. If you need more information then check out the LM3914 Datasheet.
Final adjustsments are simple and the only thing needed is a digital voltmeter for the necessary accuracy.
Connect an input voltage of 12.65 volt between the positive and negative poles and adjust the 10K trimmer potentiometer until Led 10 lights up. Lower the voltage and in sequence all other Led's will light up. Check that Led 1 lights up at approximately 11.89 volts.

At 12.65 volt and higher the battery is fully charged, and at 11.89 is considered 'empty'.
The green Led's indicate that the battery capacity is more than 50%, the yellow Led's indicate a capacity of 30% - 50% and the red Led's less that 30%. This circuit, with the components shown, uses less than 10mA.
Ofcourse you can adapt this circuit to your own needs by making small modifications. The circuits above is set for 'DOT' mode, meaning only one Led at a time will be lit. If you wish to use the 'BAR' mode, then connect pin 9 to the positive supply rail, but obviously with increased current consumption.
The LED brightness can be adjusted up- or down by choosing a different value for the 4K7 resistor connected at pin 6/7
You can also change the to monitoring voltage level. For example, let's say you wanted to change to 10 - 13 volt, you connect 13volt to the input (+ and -) and adjust the 10K potentiometer until Led 10 lights up. Change temporarily the resistors at pin 4 with a 200 Kilo-ohm potentiometer and reconnect a voltage from 10 Volt to the input. Now, re-adjust the 200K potentiometer until Led 1 lights up. When you are satisfied with the adjustment, feel free to exchange the 200K potentiometer with resistors again.(after measuring the resistance from the pot, obviously).
The diode 1N4007 was included to protect the circuit from a wrong polarity connection.
It is however strongly recommended to connect the monitor directly to the battery, in principle a connection to the cigarrette lighter would suffice but for reasons unknown at this time the voltage at that point is 0.2 volt lower than the voltage measured directly on the battery. Could be some residual resistance caused by ignition switch and path through the fuse?

If you have any questions or suggestions, put them to Jan Hamer in the Netherlands. He does speak and write english.

Back to Circuits Menu page

Battery Tester for 1.5 and 9V

by Matthew B.

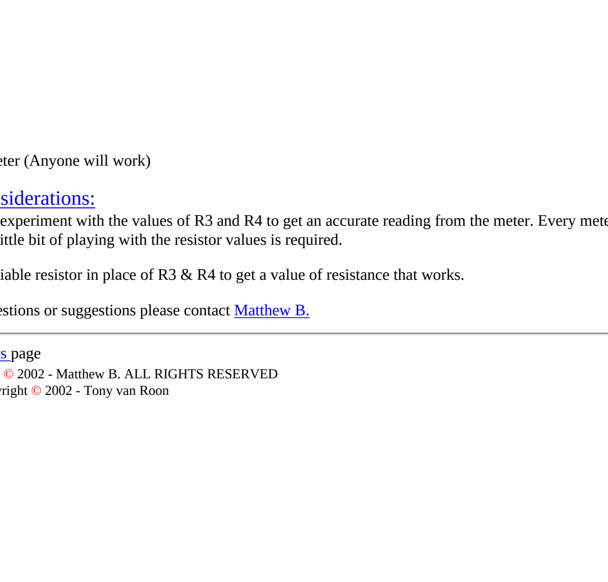

Parts List:

R1 = 18K
R2 = 240 Ohm
R3 = 8.2K
R4 = 3K
R5 = 10 Ohm
M1 = Panel Meter (Anyone will work)

Design Considerations:

You may have experiment with the values of R3 and R4 to get an accurate reading from the meter. Every meter is different, so a little bit of playing with the resistor values is required.

Try using a variable resistor in place of R3 & R4 to get a value of resistance that works.

If you have questions or suggestions please contact Matthew B.

Back to Circuits page

Bench Top Power Supply -- Part 1.

"This 30 volt Bench Top Power Supply is rated at 10 amp, and it is so versatile and powerful that it will slowly turn your regular 115VAC power drill. It was designed to work under the most extreme circumstances and fully short-circuit protected, even in the 10-Amp setting. Cooling fan(s) keep the semiconductors and the large cooling rib cool automatically."

by Tony van Roon, VA3AVR

Introduction:

This "jumbo" power supply is build around the monolithic volt regulator IC from Motorola, the MC1723, which is the cmos version of the old µA723 from Fairchild Semiconductors. Other versions of this IC, like the LM723 from National and others, and even the old MC723 metal-can will work too. The µA723 voltage regulator was designed by Bob Widlar and first introduced in 1967, and used ever since. It is a flexible, easy-to-use regulator with excellent performance.

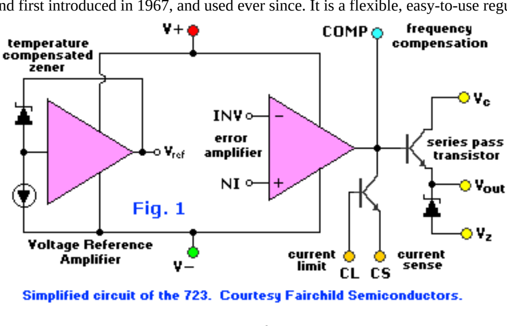

Simplified circuit of the 723. Courtesy Fairchild Semiconductors.

Looking at Fig. 1., this 14 pin regulator is not of your average type. You find this regulator everywhere, in a variety of applications including military. This IC can function both as a positive ***or*** negative voltage regulator and designed to deliver a load-current of 150mA DC. With external 'pass' transistors the output current can be increased to significant levels, as in our project to about 10 amps (depending on your transformer). A special temperature monitoring circuit (optional) will activate two to four CPU fans (optional) automatically if the temperature of the large cool rib exceeds an adjustable temperature and activate or deactivate the fans within a 2.3°C temperature variation. Pretty good for a *'cool'* rib in my opinion. Even at 1 amp the cool rib may get warm, but at 10-amp it gets really hot and so the fans will not only keep the temperature at a safe level it also is an added safety feature to give this powersupply a life-span of at least 30 years! The semiconductors in the shaded, light yellow area on the **Circuits Diagram** below go all on the large cool rib. See Fig. 5.

Voltage Output in 'Low' setting is variable from 0.7 - 6 volts (more later why the 0.7V), in the 'High' setting the voltage is variable from 3 - 37 volts. Current is adjustable in the 'Low' position from 0 - 1 amp and in the 'High' setting from 1 to 10 amps. 0.1% line and 0.03% load regulation. Ripple is less than 0.001Vpp. Scale tolerance Low: 0.2%, High: 0.5%. Another welcome feature is the short-circuit protection. Beautiful chip. The normal commercial temperature range is 0°C to 70°C (MC1723CD, CL, CG, and CP package). The military version (MC1723G or L) can handle a temperature range of -55°C to +125°C. That one you can really freeze or cook!

Voltage Regulation:

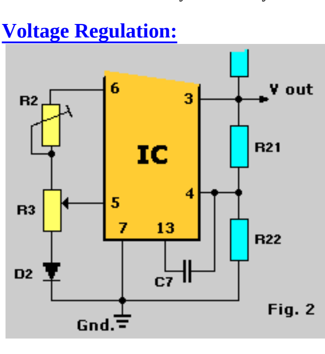

Shown in Fig. 2. was the initial idea of voltage regulation and method we will be using. As mentioned before there are two scales, 0.7 to 6 volts and 3 to 30 volts. A nice problem way to do that is with a DPDT switch (S2). Plus we will add a Led to indicate which scale we are on. This toggle-switch switches both the volt-scale and the volt-meter.

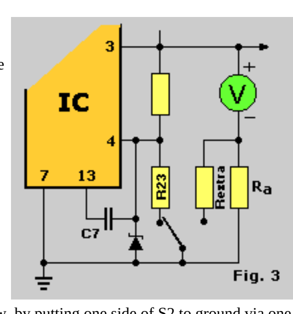

In Fig. 3. you can see how, by putting one side of S2 to ground via one resistor, the output voltage is in the 3 - 30V scale, and the other side of S2 via another resistor (R-extra) to switch to the 0.7 - 6 V scale. At the same time we switch a parallel resistor with it as a shunt for the panel-meter. If we calculate the value of this resistor to represent the meter R_i for the 6V scale, then everything is a piece-of-cake. A single pole switch is in this scenario sufficient, without limiting any performance. A second pole is used to switch the led-indicators, making S2 a double-pole-double-throw type. The 'Voltage' on the front panel is controlled with potentiometer R3 and the scale adjusted with trimmer pot R2.

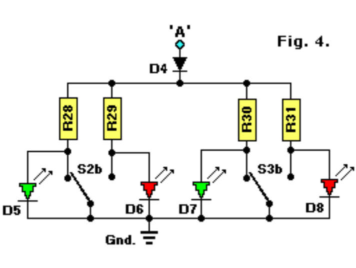

The Led indicators have a voltage of between 1.8 and 2.0 volts dc and the current no more then 25mA max. They can also use be used to glow on AC, only then an extra diode will be required (see Fig. 4.) which also protects the Led's just in case we accidentally connect them the wrong way. Point 'A' is connected to the same as indicated on the circuit diagram. Leds D6 & D8 are for the 30-volt and 10-amp respectively and D5 & D6 are the 6-volt and 1-amp settings but are not lit because they are shorted by the switch S2b and S3b. Resistors R28 to R31 are chosen accordingly to input voltage. A rule of thumb is about 100 ohms per volt input voltage. This means a little less than 10 milliamps per Led and that is enough to light them up. Depending on the Led type you use (regular, high-, or ultra brightness) you may have to adjust these resistors to suit your needs. You could use trimmer pots instead of resistors but that is such an overkill and waste. So, not needed, just a bit of tinkering may be required. The method of short circuiting the unused leds was chosen since this was the simplest and cheapest way of going about it. They also serve as a "On/Off" indicator of the power supply when it is switched on because a minimum of two led's will always be on. It is okay to use two bi-color leds but they are more expensive.

Part 2 - of this project will start with the construction of the large cool rib, mounting and wiring up all semiconductors, and (optionally) the cooling fans. Then the back panel and the 115VAC wiring of the on/off switch, transformer, fuse holder and powercord/receptacle, and last the bridge rectifier BR1 and the large electrolytic capacitor C3. There are lots of photographs and pictures to help you get through all this. The Printed Circuit Board and Lay-out are also available in Part 2. The finished product is a worth while project and outperforms many commercial units.

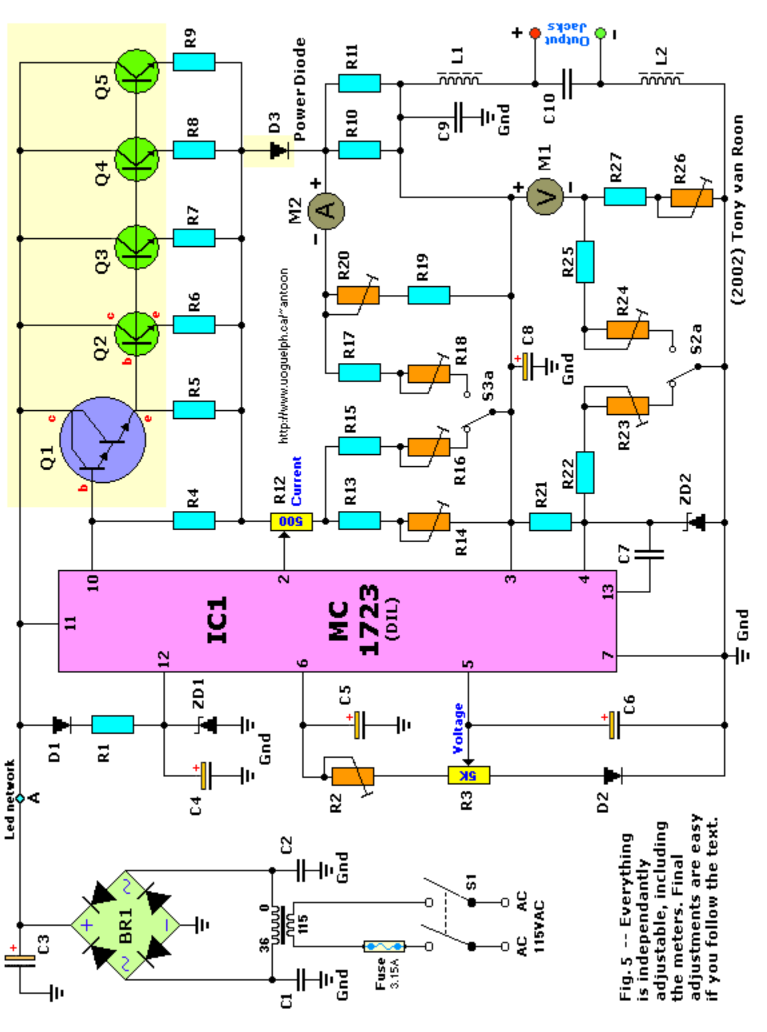

Click here for a full size version in horizontal view. Only the diagram above prints correctly though.

Back to Circuits Page or Continue to **Part 2**

Last Updated: November 7, 2003

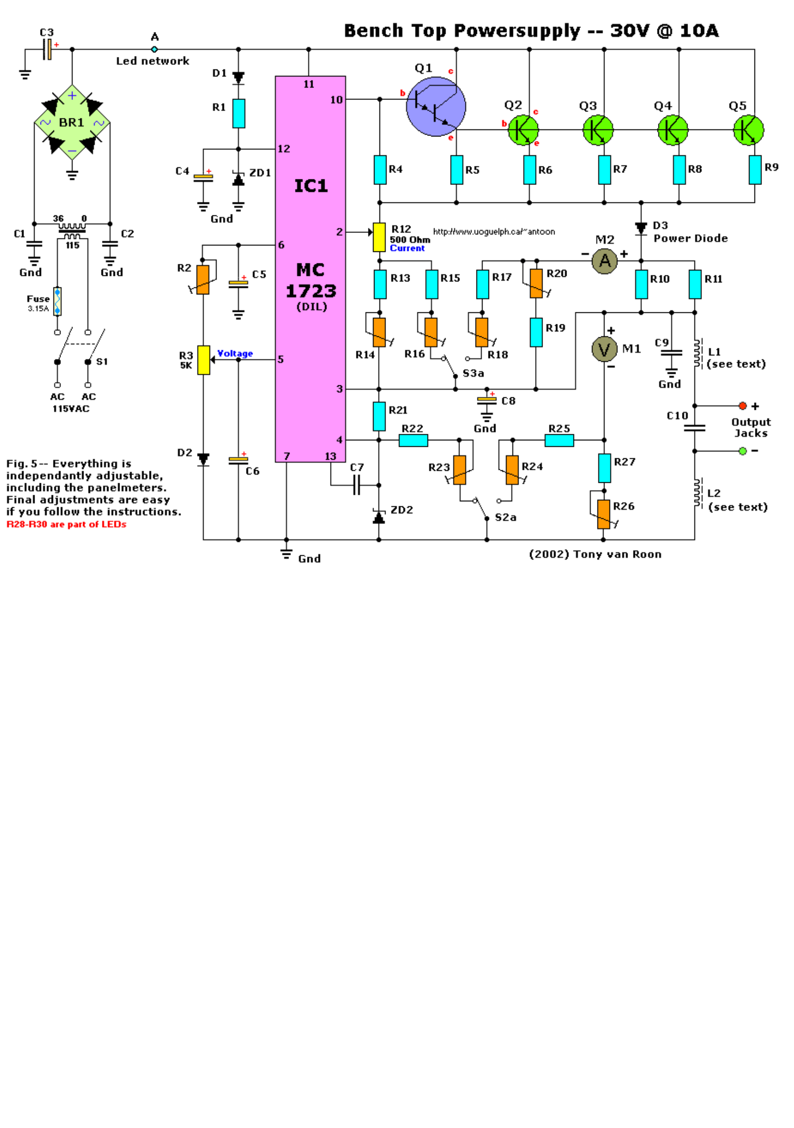

Fig. 5 -- Everything is independantly adjustable, including the panelmeters. Final adjustments are easy if you follow the instructions.
R28-R30 are part of LEDs

Bench Top Powersupply -- Part 2

"In this second part of the Bench Top Power Supply project we will cover the construction, assembly, and wiring of the large coolrib and the optional Automatic Fan Control circuit. When that is done the transformer T1, 115VAC components, large capacitor C3, and the bridge rectifier will be installed and wired up. There are lots of pictures and photos to help you out. Main thing to remember is to TAKE-IT-EASY, read the explanations and take your time. This is definately a NO rush job."

by Tony van Roon, VA3AVR

The Large Coolrib:

Building the large coolrib was a lot of fun. I found an old coolrib in one of my parts boxes which measured about 11" x 4-1/8" (28 x 10.5cm) which is perfect because it fitted the back of the Hammond Instrument Case perfectly with room to spare for the AC-side (see photo). The Hammond Instrument Case is not cheap, but is a ventilated, low-profile, series 1426V type with dimensions of about 12x8x4 inches. Make sure **your** transformer fits your instrument case!

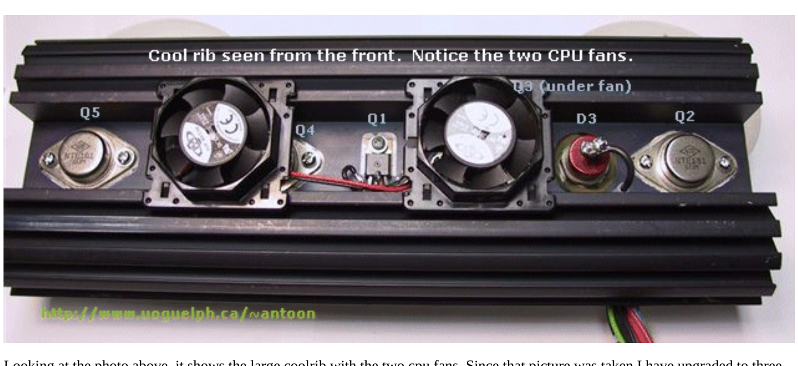

Looking at the photo above, it shows the large coolrib with the two cpu fans. Since that picture was taken I have upgraded to three ball-bearing cpu fans which have more blades and run quieter. They also are of a different model and required a bit of tinkering to mount them on the coolrib without drilling more holes. But that's the fun part of it, making things fit and work. I didn't say building this power supply was easy, well, what I mean by that is that some stuff needs to be modified in order to use it. I mounted the fans in such a way so they blow the cool air over the semiconductiors and the coolrib instead of sucking the hot air away from it.

Try to do a good job on the coolrib, it'll pay later down the road. I mention this because we are not all Tool-and-Die mechanics and for some of us this can be a real chore. But don't worry, just take your time and you get it done. It took me almost a week on and off.

Before starting to mount the transistors and power diode D3, make sure all the holes are drilled. Take a large drill bit and remove the burrs. Including several extra holes to feed the wires through from D3, the transistors and a spare just in case. Once everything is wired and bolted together it is pretty hard to drill any hole anywhere. I'm not inclined to give drill bit #'s and hole sizes at this time. Just make sure the holes are large enough to snug-fit the plastic hole-insulators. Mount the TO-3 power 2N3772 (or NTE181) transistors, Q2, Q3, Q4, and Q5. Use silicon heatsink compound on all semiconductors mounted on the coolrib, between coolrib, mica-washer, and transistor. Use insulators to screw down the transistors. Use the photo's and drawings as a guide if you are not familiar with this method. That done, mount the TO-220 transistor Q1 (2N6388 in my case). Again, make sure it is mounted insulated.

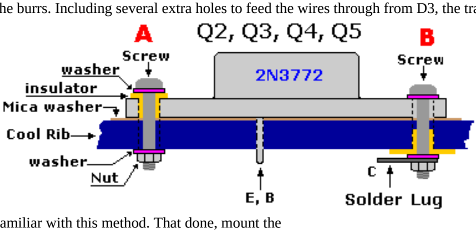

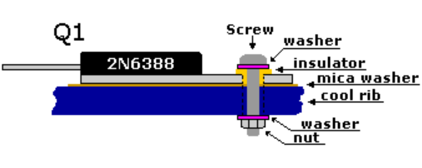

Power diode D3, needs some pre-work if you use the stud-mounted model, like I did. The **two** mica washers and heat-shrink tubing makes sure that this component also is insulated from the coolrib (see pictures). Note again that D3 uses mica washers on each side of the coolrib and a bit of heat shrink tubing in between, the size of the thickness of the coolrib, to prevent the stud from touching the coolrib via the inside of the mounting hole. You need to drill the hole a little bigger to account for the extra thickness of the heat shrink tubing. Shrink the heat-shrink with a hairdryer or something to make it a sturdy fit. Try to make it a good fit as possible inside the mounting hole [illegible]

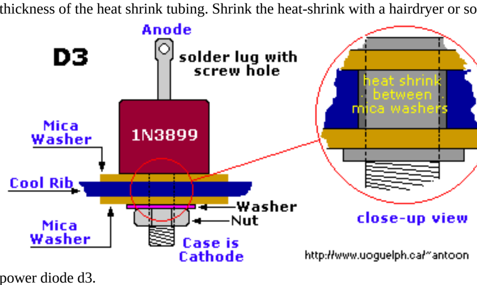

[illegible]

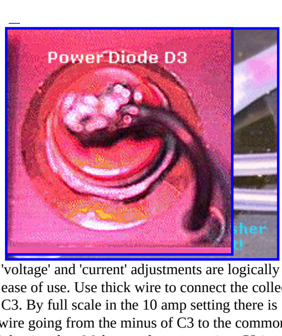

[illegible]

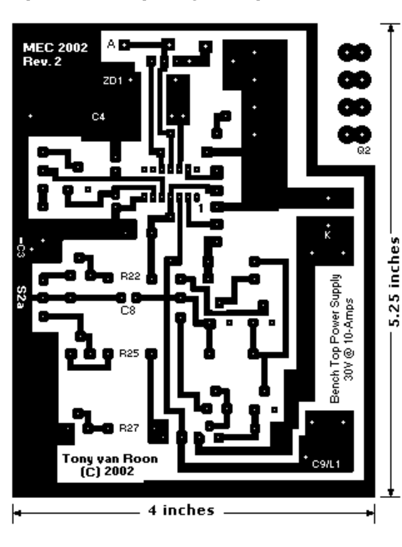

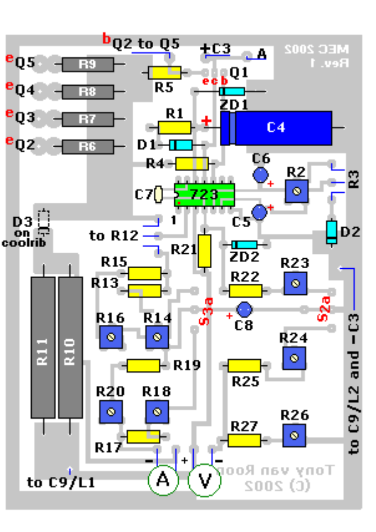

Wire-wound resistors R10 and R11 need to be mounted 'raised' from the pcb because they may get hot and placing them on ceramic standoffs or something will prevent burning the pcb in that area. Diode D3 and transistor Q1 are drawn on the layout but are actually mounted on the large coolrib, so take note.
When you are ready to wire up the switches then it is important to know that they are drawn in the 30-volts (S2a) and 10-amps (S3a) positions. Dimensions of the PCB are: 4 x 5.25 inches or 295 x 385 pixels for Paint Shop Pro. The pcb shown above is NOT to scale.

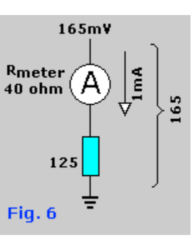

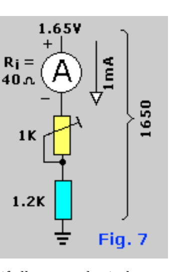

The Panel Meters:

A big boy like this Jumbo power supply earned to have a set of good panel meters. In the prototype a set of 1-milliamp full-scale units were used. But I leave it to your own fantasy and creativity how to solve the problem to enhance the overall cosmetic view of this power supply. As you can see on circuit diagram (Fig. 5, Part 1), both meters have four switching resistors. Two of them are mounted permanent in series with the measuring system, the other two are paralleled by means of a switchable section.

You should get panel meters with a very low own current use and on top of that if possible types with 30 or better still 60 indicator stripes (or markings) on it. A low current usage also means a low internal resistance (R*i*) which will benefit in the area of current measurement of that particular panel meter.
We assume that in the low 0 to 1-amp setting there are only small voltages available over R10-R11 and if all goes to plan is the maximum voltage around 165 millivolt and that is for low-ohm meters feasible. So, try for a model with about 100 millivolt at full-scale. Which means that a 100 millivolt type only pulls 1 milli-amp at full scale. A 100µA type will have a R*i* of about a 1000 ohm. Check it yourself with Ohm's Law. For the current panel meter try to get a type with 50 or 100 indicator stripes (or markings). This is less critical for the 'Volt' unit. Basically you can use any model as long as its own power is not higher than a couple milli-amps. The internal resistance or R*i* is less important since any type of internal resistor will be removed anyways.

To calculate these resistors (R17 to R20 for **current**, R24 to R27 for **voltage**), you have to determine your meter's specifications. And here again, play with Ohm's Law. Point is that in both cases, for current and voltage, we measure **voltage** every time. For the measurement of current is that 165 millivolt in the 1-amp position and 1.65 volt in the 10 amp position. An example is given to make that very clear. Imaging we have a unit which at full deflection pulls 1 milli ampere and has an internal resistance of 40 ohms. If we want this unit to measure 165 millivolts then we have to calculate the values as shown in the Fig. 6. example. The 165 mV is the voltage, so the current has to be 1 milli-Ampere, using ohm's law that gives us a total resistance of 165 ohms. This is the total resistance of everything. To get the value of the shunt resistor just deduct the internal resistance. So, the shunt resistor has to be exactly: 165 - 40 = 125 ohms. To comfortably be able to adjust the meter's deflection we devide this up in regular resistor of 68 ohm and a trimmer pot of 100 ohms. The desired value of 125 ohms lays somewhere in between. But we are not done with that. We still have to take the 1 - 10 Amp setting in consideration because there are already a couple shunt resistors in series with the meter and those are the components for the 10 amp scale. Looking at the example in Fig. 7, we have to measure there 1.65 volt and that means a resistance value of 1650 minus 40 is 1610 ohms. This weird resistance value can be obtained with a regular 1.2K resistor and a trimmer potentiometer of 1K.
The required value of 125 ohm can be acquired by adding another resistor parallel with the funny 1610 ohm one. Doing the math (ohm's law), it turns out the value of this parallel resistor is about 135.5 ohms and that is easily obtainable with a 68 ohm resistor plus a 100 ohm Bourns trimmer potentiometer. And if you're a perfectionist you can even choose a 82 ohm and a 100 ohm trimmer potentiometer. In the end you will be getting something as shown in Fig. 8. If you have different types or values of panel meters, the math is exactly the same. The trimmer pots with do the rest.

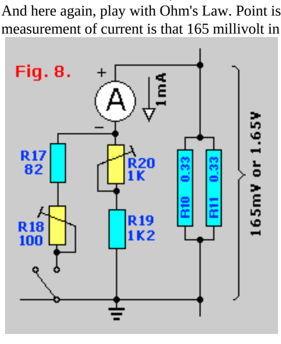

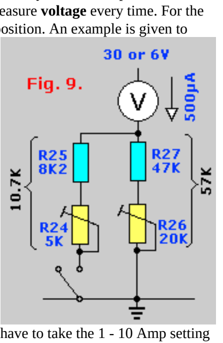

The indication for the Volt-meter is similar. Note that we have taken a 500µA meter as an **example!** I mention again, you have to find out the characteristics for the meter ***YOU*** are using. (No, I will not do the math or other calculations, please do it yourself I don't have the time). It is not all that difficult. Simply assume we're gonna measure in the 6 and 30 volt ranges which happens to occur with a lot easier resistor values. Let's say we have a panel meter with an 'internal resistance' of 3000 ohms and that at full-scale it uses about 500µA, then the shunt resistors are looking like this: for 30 volt the circuit needs a total resistance of 60K, so we need a 57K as shunt which is put together of a regular 47K resistor plus a 20K trimmer potentiometer. For the 6 volt scale we need a total shunt of about 9K which is put together by putting a 10.7K resistor parallel with a 57K resistor. Again a strange value but 8.2K plus a 5K trimmer potentiometer will make it work. In Fig. 9 I used, where ever I could, metalfilm resistors instead of the regular carbon type. They are more temperature stable. But carbon types will work fine.

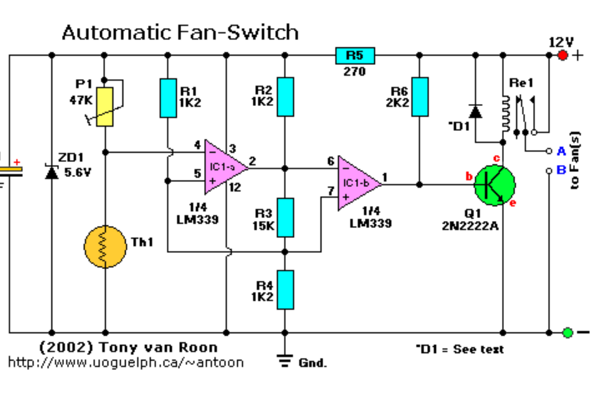

Shown above is the circuit diagram for the automatic temperature control switcher. The thermistor, a 1.7K at 70°F model available from Radio Shack (not sure), will keep tab on the coolrib's temperature (adjustable with a 10-turn trimmer potentiometer P1) and activate the cpu fans (or one larger fan) to keep things cool. This circuit is not part of the Power Supply PCB at this time, but (given time) I will change that early in the new year. I played with several different value thermisters; 1.7K, 5K, 10K. They all worked fine after playing with the resistor network a bit.
The D1 diode can be a signal diode like the 1N914 or 1N4148 for micro relays, use a 1N4001 or higher for relays above 100mA. D1 acts like a spark arrestor/filter when the coil is de-energized.

Just in case, here is **another circuit** and this one **Heat Sensor** using the more common 741 op-amp. Good circuits, working fine and a bit cheaper. All parts are available from Radio Shack and Tandy. I found the 741-circuit easier to adjust and there are no capacitors or zener-diode. But, make your own choice. The "Heat Sensor" circuit works great and uses a minimum of easily obtainable parts.

If you have any questions, I'll gladly answer them via "Tony's Message Forum". I regret not answering personal emails!

Back to Circuits Page or Continue to **Part 3**

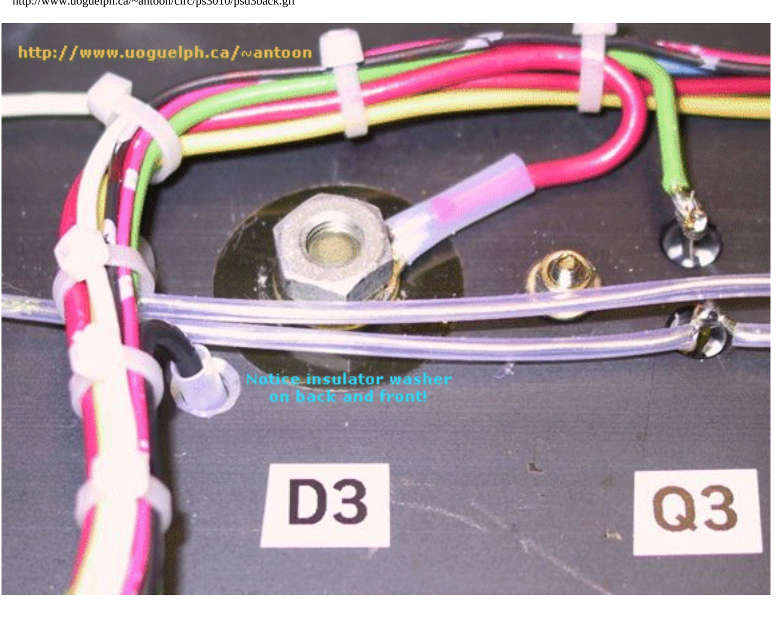
http://www.uoguelph.ca/~antoon
Notice insulator washer
on back and front!
D3
Q3


CPU Fan
Power Diode D3
2N3772
NTE181
NTE181
http://www.uoguelph.ca/~antoon

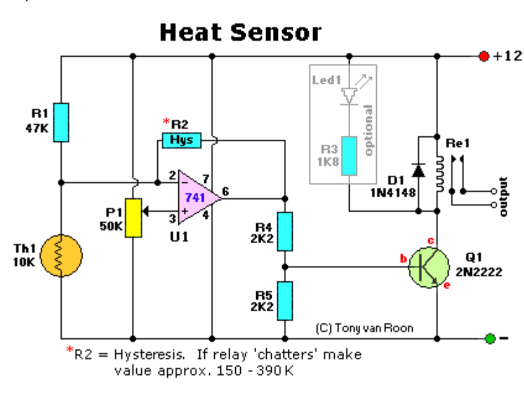

Table 1

Part	Description	Radio Shack	Digi Key	Newark	Notes
IC1	LM741 Op-Amp	276-007	LM741CN-ND	LM741CN	NE741,µA741, etc.
Q1	2N2222A transistor	276-2009	2N2222A-ND	2N3904	See text
D1	1N4148 Diode	276-1122	1N4148GICT-ND	1N4001	1N4001, or others
Th1	10K Thermistor	271-110	KC003T-ND	96F3309	KC003T in prototype
Re1	12V Relay	275-249	Z753-ND	83F8057	RS is 1A (min)
R1	47K, 5% resistor				yellow-purple-orange
R2	5%, Resistor				see text
R3	1K8, 5% resistor		Optional		brown-gray-red
R4,R5	2K2, 5% resistor				red-red-red
P1	50K Trimmer Pot				Multi-turn

Couple Notes:

The Thermistor, or NTC (Negative Temperature Coefficient) of 10K, is a standard type. Most types will work. The one in the diagram is a 10K model made by Fenwal (#197-103LAG-A01).

The resistance lowers as the surrounding temperature increases which affects the output (pin 6) and energizes the small relay and Led1(optional, just cosmetic and can be left out).

P1 is a regular Bourns trimmer potentiometer and adjusts a certain range of temperatures. I used a 50K, 10-turn type for a bit finer adjustment but any type will work.

R1 is there to protect the Thermistor (NTC) from a full 12V just in case trimmer pot P1 is adjusted all the way down to '0' ohms. In which case it gets very hot and probably burn.
R2 is optional in case your relays tends to 'chatter' a bit. It provides a bit of hysteresis when the set temperature of the thermistor reaches its threshold point. This value may need to be adjusted anywhere between 120K and 470K (although I indicated different values on the schematic).

Transistor Q1 can be a 2N2222(A), 2N3904, NTE123A, ECG123A, etc. Not critical at all. It acts only as a switch for the relay so almost any type will work, as long as it can provide the current needed to activate the relay's coil.

D1, the 1N4148, acts as a spark arrestor when the contacts of the relay open and eliminates false triggering. Feel free to use any other type, like a 1N4001 or something. Solder directly onto the '+' and '-' relay terminals.

If you need a 'Frost' sensor, just swap positions of the R1 and Th1 positions.

Back to Circuits page

Bench Top Power Supply -- Part 3

by Tony van Roon.

Where applicable, click on the picture for enlargements. Above you see the photo of my finished model. Looks good, performance is excellent, and I am very happy with it. Notice however that the panel meters are shown non-modified, meaning that I added and modified the stripes for the two settings after the picture was taken. I don't own a digital camera so am dependent on others to help me out.

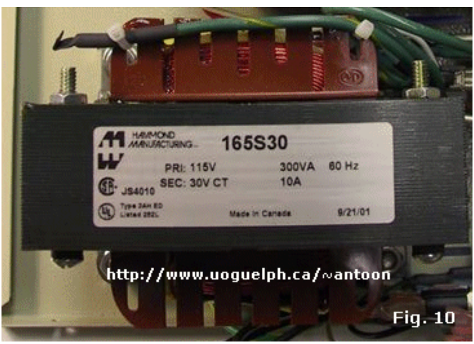

Fig. 10

I purchased a brandnew transformer, model 165S30 manufactured by Hammond. It is of the regular kind. You can get a 'low-profile', horizontal type which mounts a bit lower. Whatever model you have or buy make sure it fits your case including the large capacitor. The 165S30 transformer has 5 wires, the primary side has two black wires which are connected to your 115 vac. The secondary has 3 wires, in my case two green and one green/yellow. The green/yellow is not used. Isolated it with some heat shrink and tie it up, see Fig. 10. I never cut the wire off. The two green wires go to your Bridge Rectifier. It is probably marked 'AC' or '~'. Make sure the transformer makes good ground with the chassis, which in my case meant removing the paint. I then use a file to take the varnish off one bottom corner of the transformer. When you finish mounting the transformer into the case, take a multimeter or continuity tester and make sure the chassis of the transformer makes good connection with the chassis of the power supply.
The fuse is a 3.15A slow-blow type to prevent it blows when you switch on the power supply with a bit of load. This transformer is a real heavy one and weighs several pounds. If you're planning to use it with heavy loads, I would suggest to get one which can provide 12-15Amps at a desired voltage, but, the 10-amp transformer listed in the parts list will work. The difference is that the 10 amp transformer gets pretty hot if you use it at the maximum current. If you would have a 12-15 amp type it will only get a little warm. In my case, I do use the 10amp setting often but not for extended periods. A couple hours at best.
It is probably best to mount the Bridge Rectifier, fuse holder, and power cord first before bolting down the transformer. As you can see in Fig. 11, I used a mounting bracket for the large capacitor, this bracket is also mounted on the back panel so don't forget to drill the holes first. I used a 115vac receptacle, fuse, and on/off switch combo which I had laying around and the whole thing is mounted on the back panel.

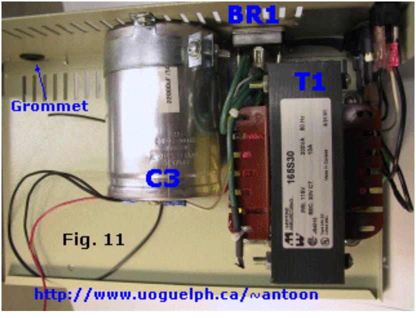

Fig. 11

Crimp spades onto the two secondary green wires and mount the transformer. Connect those wires to the Bridge Rectifier as mentioned earlier. Install the large capacitor and wire up to the '+' and '-' of the Bridge Rectifier. From this point on all other '+' and '-' connections are taken from the large capacitor terminals. Use thick wire.
As mentioned earllier, instead of a Bridge Rectifier you could use four seperate 'stud-mount' diodes and make your own bridge. The two anti-rattle capacitors, C1 and C2, should be mounted directly onto the transformer or the bridge rectifier for best performance. Power diode D3 is a very vital component in this power supply and so was choosen a bit over-rated to make sure it will perform satisfactory under all circumstances and temperature changes. You probably already know that a diode is temperature sensitive which is most noticable in the 0.7Volt range. Since the same D3 also has a job of current limiting it is best to make sure this diode does not get too hot. So, we really want a solid diode of 20 amps minimum.
In case of a short circuit, there is at least 2.5 amps of current going through each power transistor, and that is a lot at about 60 to 70 watts of dissipating energy. That is why the 2N3772 power transistors come in which can dissipate 350 watts or so. And so, as a matter of speaking, at 30 volts we could well assured short out the output jacks and fry an egg on the output power transistors.

Now lets have a look at L1 & L2. L1, C9, L2, C10 are soldered as close as possible to the output jacks. We even have to cut the solder leads as short as possible. C10 is soldered directly on to the '+' and '-' output jacks. C9 is soldered parallel over the L1/C10/L2 network. The two thick wires coming from the printed circuit board are soldered onto each leg of C9. Oh yeah, I mention again that the PCB has to be mounted **isolated** from the case. The common ground connection is connected to the '-' jack via L2. This is a little bit of tinkering but can be done. We are working here with 10 amps so worth all the efforts.

I call the ferrite beads "pig snouts" because that's what it looks like to me, but hey, call it whatever you want. You need to make two of them. On the circuit diagram they are indicated as L1 and L2. One or two turns of thick magnet wire will do the trick.

By now you must be anxious to try everything out. Well, be patient, we're almost done. We still have to adjust the eight trim potentiometers on the pcb. And you really need to sit down for it and carefully take your time. Look for a time and place when you can do this quietly and undisturbed. The last thing you want is to open this heavy power supply up again and re-adjust it because of initial sloppy adjustments. So, take your time, go slow, and verify each adjustment until you're satisfied.
The adjustments are done in a special sequence and if you keep yourself to this procedure then I doubt you would encounter any problems. Okay then, here goes it.

Fig. 12

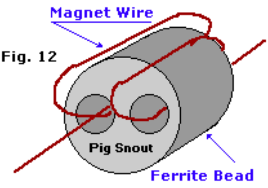

Adjustment procedures:

FIRST check for correct wiring from and to pcb, jacks, meters, and coolrib. Very important.
Before starting the adjustments, familiarize yourself with the trim pots on the printed circuit board and the potentiometers on the front panel. The two on the front panel are R3 and R12, the others are on the pcb. I mention this to avoid confusion while doing the adjustments. If you wish, mark all the pots ahead of time by writing the 'R' numbers on a piece of scotch tape or something. It will help a lot!
Important: make sure to 'zero' the panel meters with the little plastic screw attached to the needle movement unit.

Open up the connection of the thick wire between the pcb and the positive of C3 and insert a small fuse of a couple hundred milliAmps. If you don't have a small fuse handy then you can also use a 1/2 watt 10-ohm resistor or something similar. Do NOT plug in the power supply yet! Turn all trim pots to the left (counter-clock-wise) all the way. Set the two potentiometers on the front panel about halfway. Set the two switches on the front panel (1/10A, 6/30V) to the low settings, meaning the current switch on 1 amp, and the volt switch on 6 volt.
Take your digital multimeter and secure its minus (black) lead on the minus output jack. Plug in the power supply and switch the power. If all is well and there is no smoke, the main fuse and small temporary fuse on C3 remain okay, we can continue.
Put the plus (red) multimeter probe on topside of potentiometer R3. This is the position closest to the minus of C4 on the pcb. You have to measure there a voltage of precisely 6 volts.

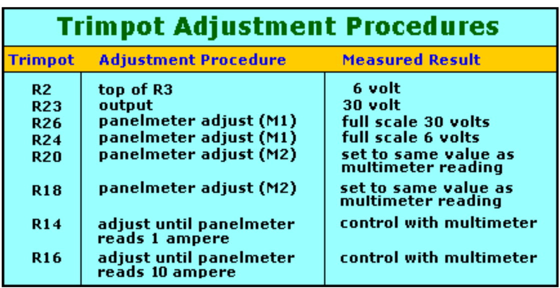

Trimpot Adjustment Procedures

Trimpot	Adjustment Procedure	Measured Result
R2	top of R3	6 volt
R23	output	30 volt
R26	panelmeter adjust (M1)	full scale 30 volts
R24	panelmeter adjust (M1)	full scale 6 volts
R20	panelmeter adjust (M2)	set to same value as multimeter reading
R18	panelmeter adjust (M2)	set to same value as multimeter reading
R14	adjust until panelmeter reads 1 ampere	control with multimeter
R16	adjust until panelmeter reads 10 ampere	control with multimeter

If needed, this voltage can be adjust by turning the R2 pot. Turning the potentiometer (R3) on the frontpanel will move the panelmeter but NOT the multimeter. If you move the red probe to the '+' output jack and you should find a variable voltage (via R3) between 0.7 and 6 Volt. Don't worry about the current meter at this time, it probably will not move at all because there is no current. All you do at this time is adjusting the low-voltage scale.
Leave the multimeter probes connected to the '+' and '-' output jacks and switch the Volt-switch (S2a) on the frontpanel to the 30 Volt position. You will see that the voltage makes a big jump upwards. We adjust R3 all the way to the right (clockwise) and adjust trimmer potentiometer R23 until your multimeter shows 30 volts. We now adjust R26 until the panel meter shows the same, 30 volts. Switch back to the 6-volt position and adjust the panel meter to 6-volt full-scale with R24. If you're done with this and you are satisfied then have beer on me for a job well done. You are half way finished!

Switch off the power, unplug the powercord. Remove the temporary fuse between the positive of C3 and the pcb and re-connect the wire to start adjustments on the current settings.
Switch the panel meters to the 6 volt and 1 amp positions and turn current-limiter R12 on the front panel all the way to the left (counter-clock-wise). Set the volt meter on the frontpanel to 4 volt with R3. Select a setting on your multimeter of 100 or 300 milli-amps dc. Take the red probe and insert a resistor of 39 ohms between the red probe and the '+' of the output jack. You will notice that current flows through that resistor. The panel meter also shows a bit of current and at the same time the needle of the panel-voltmeter falls back a little to about 2 volts or even lower. If that is the case you know your current limiter is working properly and you can continue with the adjustment procedures.
Remove the 39 ohm resistor. Switch your multimeter to the highest current setting (preferably 10A) and connect it directly to the '+' and '-' output jacks. The meter should show no more current than with the 39-ohm resistor, even less this time. Carefully open up R12 (front panel) clockwise until you see increased current on both multimeter and panel meter. A good multimeter will go to at least 10 amps, but I guess the job can be done with 2 or 3 amps also. On the other hand It would be actually better to borrow a good multimeter from a friend or rental shop if you don't have one yourself.
Okay, on with it. Open R12, slowly, as far as possible and note the current reading. REMEMBER you are still at the 1A/6V setting! If there are no problems the current reading probably shows 1/2 amp or something in that area. Let it sit in that condition for awhile and observe the temperature of the large cool rib. It should warm up a little bit. If all is okay and still no smoke you can safely assume that the circuitry works correctly.

So far so good. The following adjustments have to be done in the correct sequence. Switch the power supply **OFF.** Set the panel switch to the 10-Amp setting and also the multimeter to as high a current setting as possible. Turn R12 all the way to the left, the multimeter still connected to the '+' and '-' output jacks on the front panel. Turn the power supply **ON**. No should notice almost no current at all. The setting of the 'Volt' potentiometer does not matter much at this time so don't worry about it. Carefully adjust R12 to a high as possible value and stop when it shows about 5 amps on the multimeter. Adjust the panel meter with R20 until it shows the same value as the multimeter. When you're done the panel meter should show half way the 10-A scale. Just make sure that your multimeter can handle 10 amps. If not, then don't exceed that value with R12 or you blow up your multimeter.

Turn R12 again all the way to the left and flick the switch on the front panel to the 1-A setting. Adjust R12 all the way to the right and with R18 adjust the value of the multimeter with the value of the panel meter until they're equal.
In the mean time the coolrib is getting quite hot during all the adjustments in the 10-A settings. But that is done now. You have now adjusted six of the eight trimmer pots and so still two to go.
Remove the multimeter. Turn both potentiometers on the frontpanel (R3/R12) all the way to the left (0 position). Return the switches to the 1-A and 6-V settings. Short out the output jacks on the frontpanel with a piece of wire. Turn R12 all the way to the right and adjust R14 until the 'current' panel meter indicates precisely 1-amp (full scale).
That done, turn R12 back all the way to the left and place the current switch in the 10-A setting. Adjust the full scale of the panel meter with R16 until it shows exactly 10 amps. At this setting the cool rib heats up quickly so keep an eye on the temperature. You are done. Finished. I'll bet you are smiling now. After all, you now have an analog piece of equipment equal or better then the commercial unit and for a fraction of the cost.

Inside the enclosure I keep a little plastic box which contains some spare parts just in case I need it in the future. The parts I use are the 723 IC, the zener diodes, darlington, and one 2N3772 power transistor. Why? Well, just because everything is so-called short-circuit-protected it does not mean it can't happen, for example by a power surge or lightning. Murphy is always on the look-out. But on a safe note, this power supply is almost indestructible and you really have to abuse it to blow a fuse.

Now, what can you do with this power supply? Anything you want. Charge regular NiCad or Lead-Acid batteries, run all kinds of motors, styro-foam cutter, etc. It is limited only by your imagination.

Parts List:

Resistors
1/4 Watt, Carbon, 5% (or better), unless otherwise indicated

R1 = 470 ohm, 1/2 watt, yellow-purple-brown
R2 = 2 K, trimmer pot
R3 = 5 K, potentiometer, linear
R4 = 560 ohm
R5 = 47 ohm, yellow-purple-black
R6 = 0.1 ohm, ww, 5%, 1-watt
R7 = 0.1 ohm, ww, 5%, 1-watt
R8 = 0.1 ohm, ww, 5%, 1-watt
R9 = 0.1 ohm, ww, 5%, 1-watt
R10 = 0.33 ohm, ww, 5%, 10-watt
R11 = 0.33 ohm, ww, 5%, 10-watt
R12 = 470 ohm, potentiometer, linear
R13 = 820 ohm, gray-red-brown
R14 = 500 ohm, trimmer pot
R15 = 150 ohm, brown-green-brown
R16 = 100 ohm, trim pot
R17 = See Text
R18 = See Text
R19 = See Text
R20 = See Text
R21 = 5K, metalfilm, 1%
R22 = 820 ohm, gray-red-brown
R23 = 500 ohm, trimmer pot
R24 = See Text (non-variable: 25K trim pot)
R25 = See Text (omit for non-variable voltage)
R26 = See Text
R27 = See Text
R28 = 3.3K, 1/2 watt, 5%, orange-orange-red
R29 = 3.3K, 1/2 watt, 5%, orange-orange-red
R30 = 3.3K, 1/2 watt, 5%, orange-orange-red
R31 = 3.3K, 1/2 watt, 5%, orange-orange-red

Capacitors

C1 = 3.3 nF, ceramic
C2 = 3.3 nF, ceramic
C3 = 15000 µF or higher, 45V+, electrolytic
C4 = 1000 µF, 63V, electrolytic
C5 = 4.7 µF, 25V, tantalum
C6 = 4.7 µF, 25V, tantalum
C7 = 4.7 nF, ceramic
C8 = 10 µF, 63V, electrolytic
C9 = 1 µF, foil type. see text
C10 = 22 nF, ceramic

Semiconductors

D1 = 1N4004, 1N4005, 1N4007, BY127, etc.
D2 = 1N4148, BAX13, BAX16, etc.
D3 = 1N4389 power diode, 20A+ (see text)
D5,D6,D7,D8 = Leds, any type (see text)
ZD1 = 1N4754A, Zenerdiode, 1 watt, 39V
ZD2 = 1N4636A, Zener, 250mW, 6.2 or 6.8V
Q1 = TIP140, MJ2501, BD267A, 2N6388, etc.
Q2,Q3,Q4,Q5 = Transistor, 2N3772/NTE181
L1 = Ferrite Bead (see text)
L2 = Ferrite Bead (see text)
IC1 = MC1723, MC723, µA723, LM723
BR1 = Bridge Rectifier (see text)

Miscellaneous

M1 - Panelmeter, see text
M2 - Panelmeter, see text
T1 - Transformer, Hammond 165S30 (30V/10A), or similar
F1 = Fuse, 3.15A, slow-blow
S1 = Toggle switch, ON-OFF, DPDT, sub-mini
$S2_{a-b}$ = Toggle switch, ON-OFF-ON, DPDT
$S3_{a-b}$ = Toggle switch, ON-OFF-ON, DPDT
S4 = For use with one panelmeter: ON-OFF-ON, DPDT
Fuseholder, very large coolrib for the 4 power transistors, Q1, and D3 (isolated), wire, solder, 2 knobs, instrument case, power cord, etc. The meter scales are re-scaled with rub-on lettering.

Possible Component Substitutes:

D1 = 1N4004, 1N4005, 1N4007, BY127, NTE116, NTE125
D2 = 1N4148, BAX13, BAX16, NTE519
D3 = Possible types: MUR2510, MUR3010CT, NTE6246, NTE6247, etc.
ZD1 = 1N4754A, NTE5086A, ECG5086A
ZD2 = 1N4736A, NTE5071A
Q1 = BD267A, TIP140, MJ2501, NTE263, NTE270
Q2 = NTE181
IC1 = µA723, LM723, NE723, NTE923D

Last Minute changes and other info:

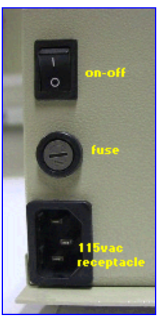

- At the right you see the AC stuff I used. Came of another defective unit. It contains the on/off switch, fuse, and receptacle. Works just beautiful. Click on the picture for an enlarged view. The cool rib is a little smaller in width then the enclosure so was just a nice opportunity to get a more professional look. Click on the picture for an enlarged view.

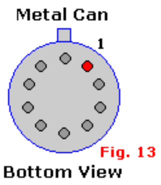

Fig. 13

- If you decide to use the older 'metal-can' version of the 723, the pin out is shown at the left.

- For the Led's I personally choose green for the low scales (0-6V/0-1A) and red for the high scales (1-30V/1-10A). But hey, use whatever preference you have. High-brightnes types is what I'm using, but again, use whatever you like.

- The bridge rectifier is one with a metal part attached for mounting on a coolrib. You can use 4 seperate stud-mount diodes of 75V/12-15A minimum. They *MUST* be mounted isolated on a coolrib.

- Powerdiode D3: I used an older "stud-mount" type of 35Amps because I had it available and it has to go onto the coolrib assembly. But use whatever you have laying arround, just keep in mind it needs to be cooled and needs to be a minimum of 20A.

- Don't forget to mount R10/R11 a little bit away from the PCB. I used 1/4" (5mm) ceramic stand-offs.

- Capacitor C3: Big sucker, but needed. Mine is a computer-grade 22000µF at 50V. Came from a powersupply out of an old 'floor-model' tape-drive. You can buy them new but you pay the price, around $35.00 CAN in my area. Keep in mind, if you are thinking of combining two or more capacitors that the their working voltage must be the same and that you may need a larger enclosure.

- Panel meters: I decided to stick with the analog panel meters. I like to see exactly what i'm doing and in this project they are just as accurate. The 'Volts' panelmeter will most likely be a 100-millivolt type with 30 or 60 scale stripes. The 'Amps' meter will probably be a 1-mA type with 50 or 100 stripes on the scale. The internal resistance (Ri) of the meters is not at all important since anything with a build-in resistor or resistance wire will be removed anyways.

- Cooling Fans: After some experimenting I decided to increase the 2 cpu fans with one more making the total 3. I also decided to exchange the cpu fans, depicted in the photograph, for a different type which is a bit larger and has more fins. The whole cooling circuit with the fans now work like a charm. I will likely modify the circuit and use a more common op-amp such as the 741, and create a printed circuit board and parts layout for ease of use. Most types of thermistors will work so don't worry too much. You just may have to play with the series resistance a bit. No big deal.

- Optional Led (yellow 3mm) and 1K8 resistor for the automatic fan control. Added this later after the front panel was alread finished. Although you may be able to hear the fans when they kick in, I prefer a visual indicator as well. Secondly, I like bells and whistles...(grin).

Copyright and Credits:

Back to Circuits Page or Continue to **Part 4 (construction photos)**


On-Off switch
Fuse holder
115VAC power
receptacle
www.uoguelph.ca/~antoon

Bench Top Power Supply -- Additional Construction Photos.

"I have been asked several times to include more construction pictures and photos. Well here they are. A couple of them can be magnified to full size; just click on them. I will add photos of the shunts for the panel meters and associated calculations on a later date. In the mean time this will get you going for a while."

by Tony van Roon

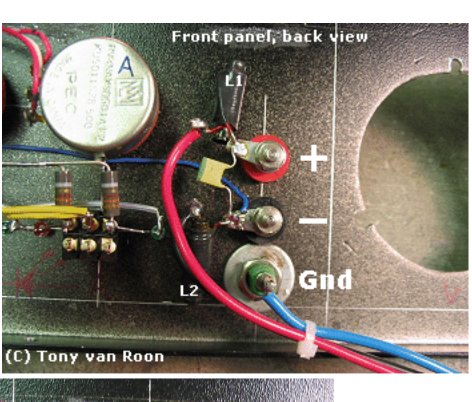

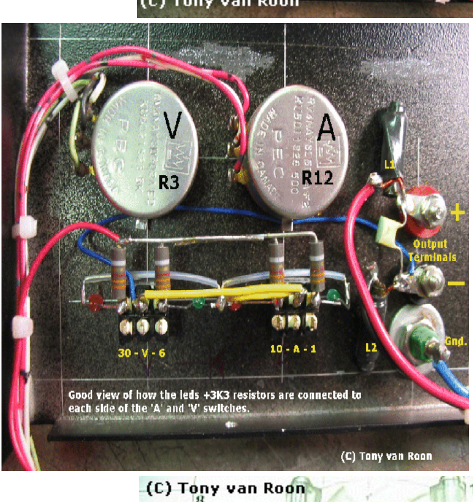

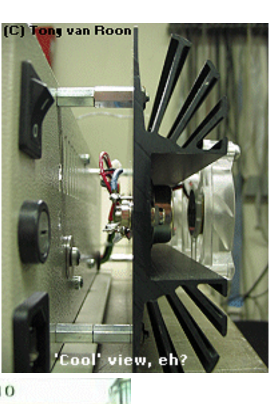

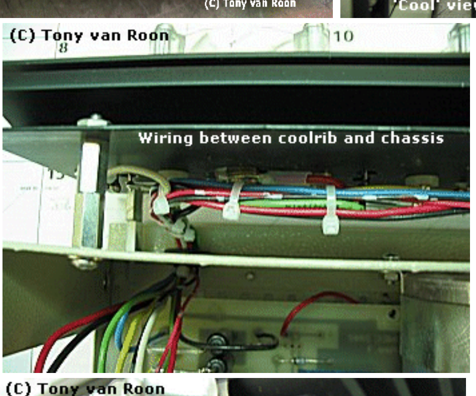

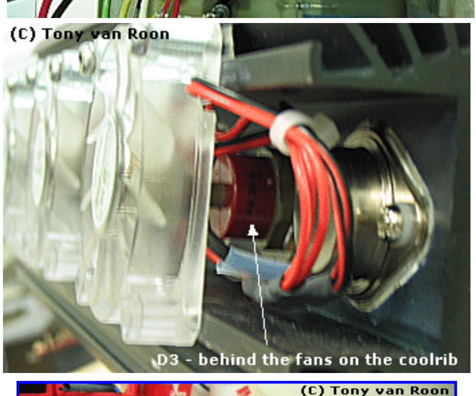

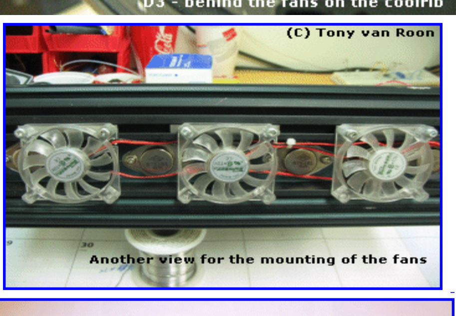

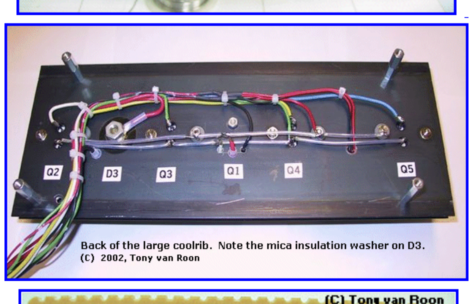

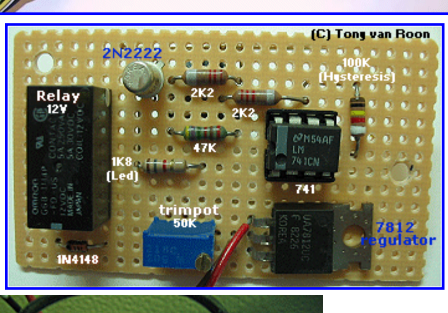

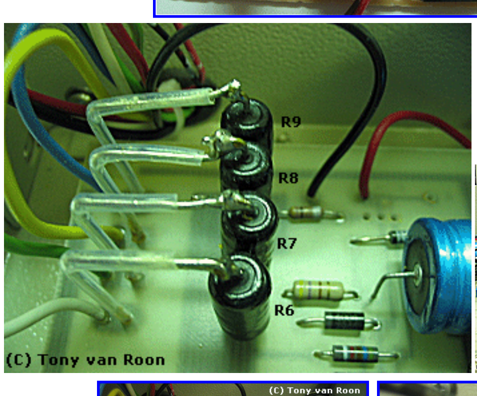

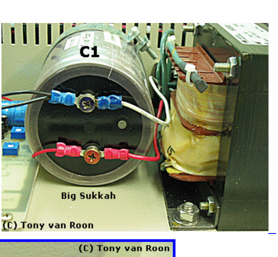

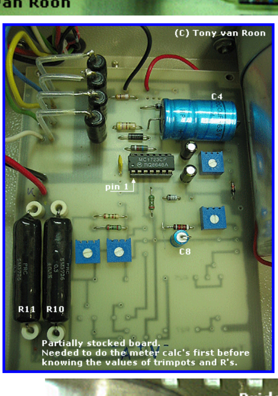

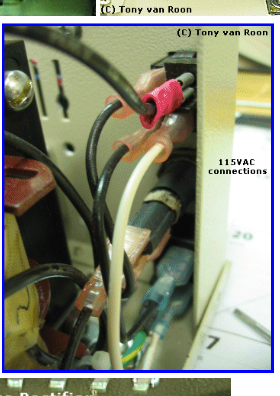

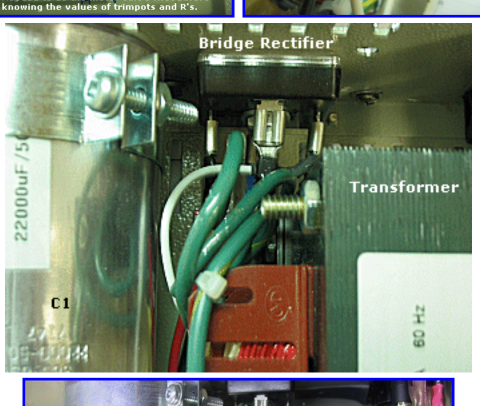

Back to Circuits Page

Last Updated: August 25, 2004

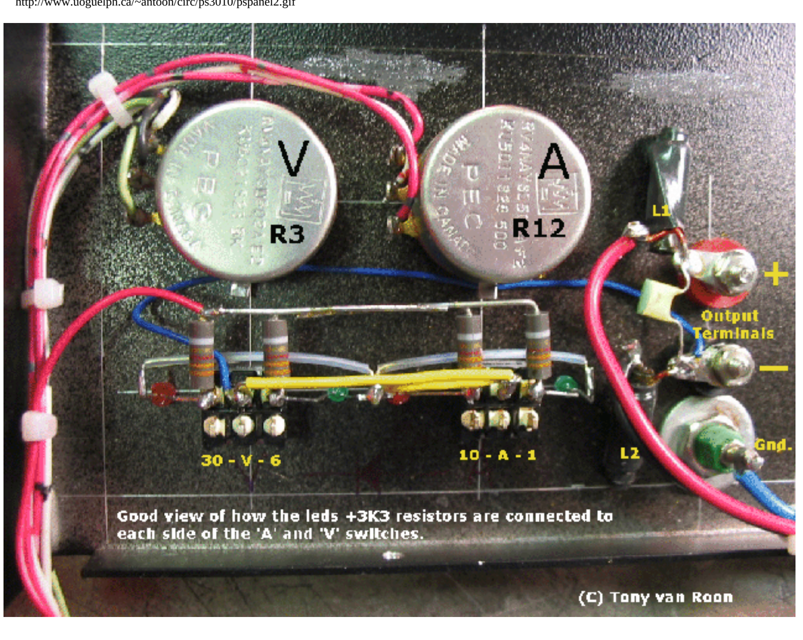
V
A
R3
R12
L1
+
Output Terminals
−
Gnd.
L2
30 - V - 6
10 - A - 1
Good view of how the leds +3K3 resistors are connected to each side of the 'A' and 'V' switches.
(C) Tony van Roon

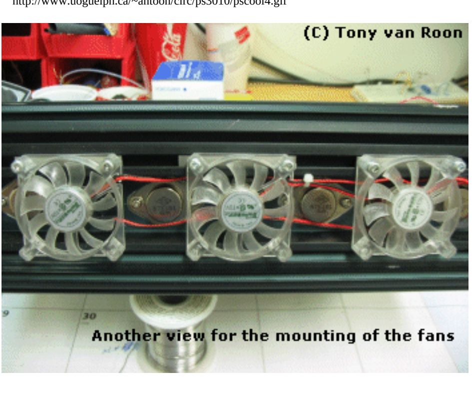
(C) Tony van Roon
Another view for the mounting of the fans

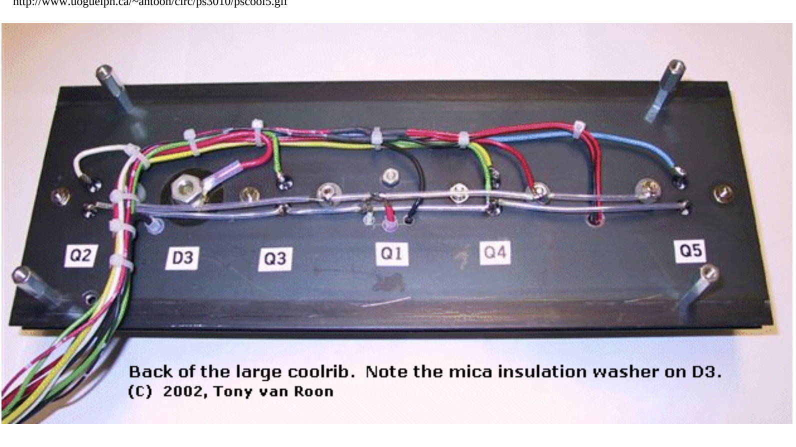
Q2
D3
Q3
Q1
Q4
Q5
Back of the large coolrib. Note the mica insulation washer on D3.
(C) 2002, Tony van Roon

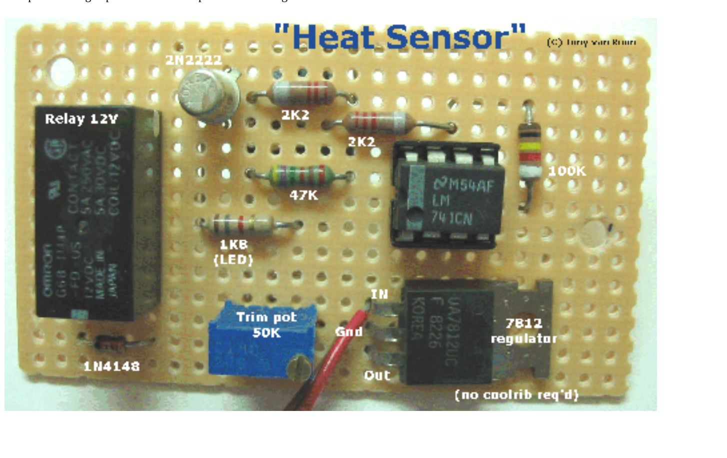
"Heat Sensor"
2N2222
Relay 12V
2K2
2K2
100K
47K
1KB
(LED)
Trim pot
50K
IN
Gnd
Out
7812
regulator
1N4148
(no coolrib req'd)

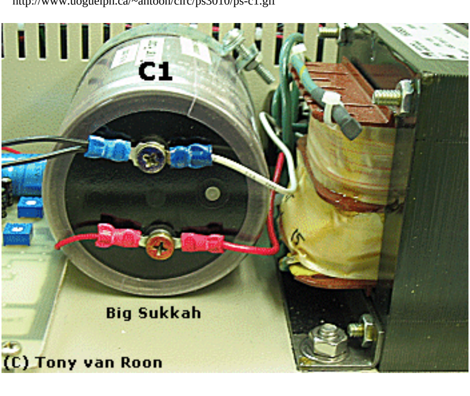
C1
Big Sukkah
(C) Tony van Roon

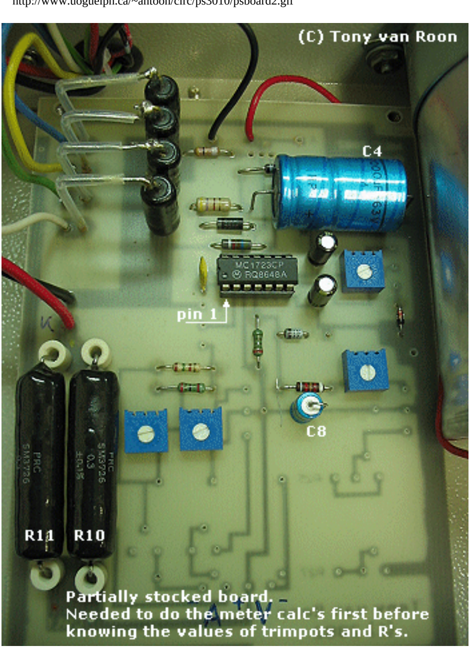
(C) Tony van Roon
C4
MC1723CP
pin 1
C8
R11
R10
Partially stocked board.
Needed to do the meter calc's first before
knowing the values of trimpots and R's.

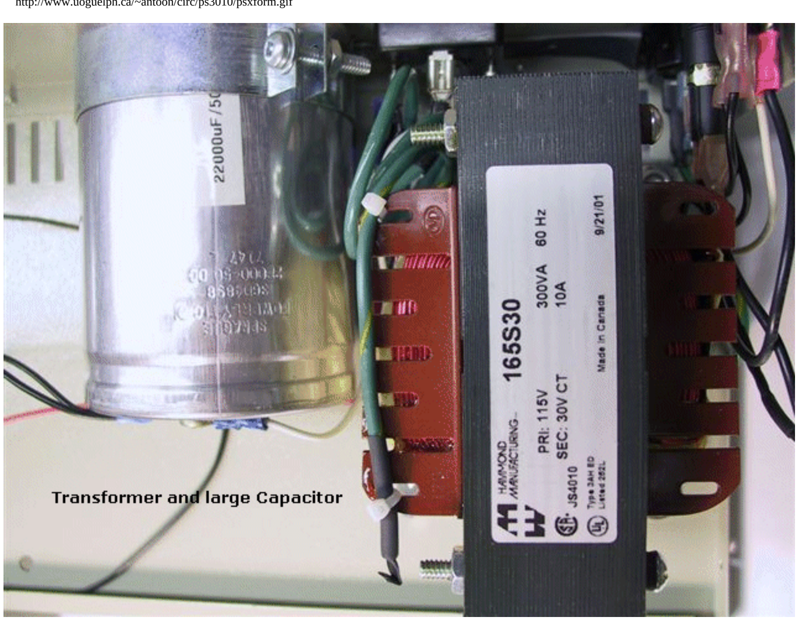
22000uF /50
165S30
HAMMOND MANUFACTURING
PRI: 115V
SEC: 30V CT
300VA
10A
60 Hz
JS4010
Made in Canada
9/21/01
Transformer and large Capacitor

Automatic Fan Switch

"This unit was designed to work with the Bench Top Powersupply project to help keep the coolrib cool in the 10-A setting."

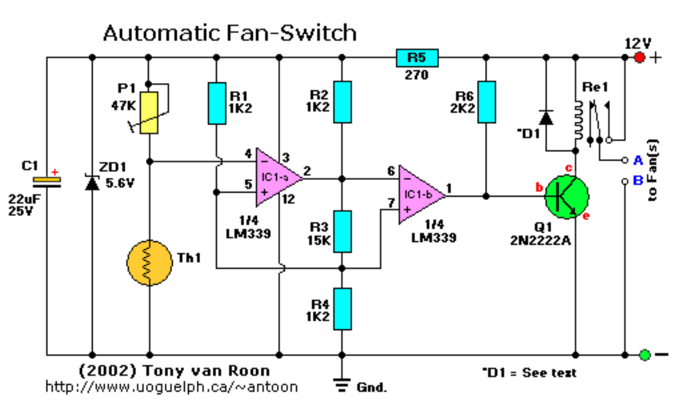

Parts List:

```
 R1 = 1K2       C1 = 22µF, 25V, electrolytic or tantalum
 R2 = 1K2       D1 = 1N4001, regular silicon diode
 R3 = 15K      Re1 = Relay, 12V
 R4 = 1K2       Q1 = 2N2222, NPN transistor
 R5 = 270      IC1 = LM339, quad op-amp
 R6 = 2K2       P1 = 47K, 10-turn trimmer potentiometer
Th1 = 1.7K type available at Radio Shack
```

How It Works:

The op-amp used is a readily available LM339. This IC contains four op-amps but we use only two of them. Use the others for spare or do something else with it.
For the thermistor I used a small, very expensive ($52), glass-encapsulated type because I had it laying around but almost any type will do. I experimented with a couple different types and all worked.

Copyright and Credits:

Back to Circuits page

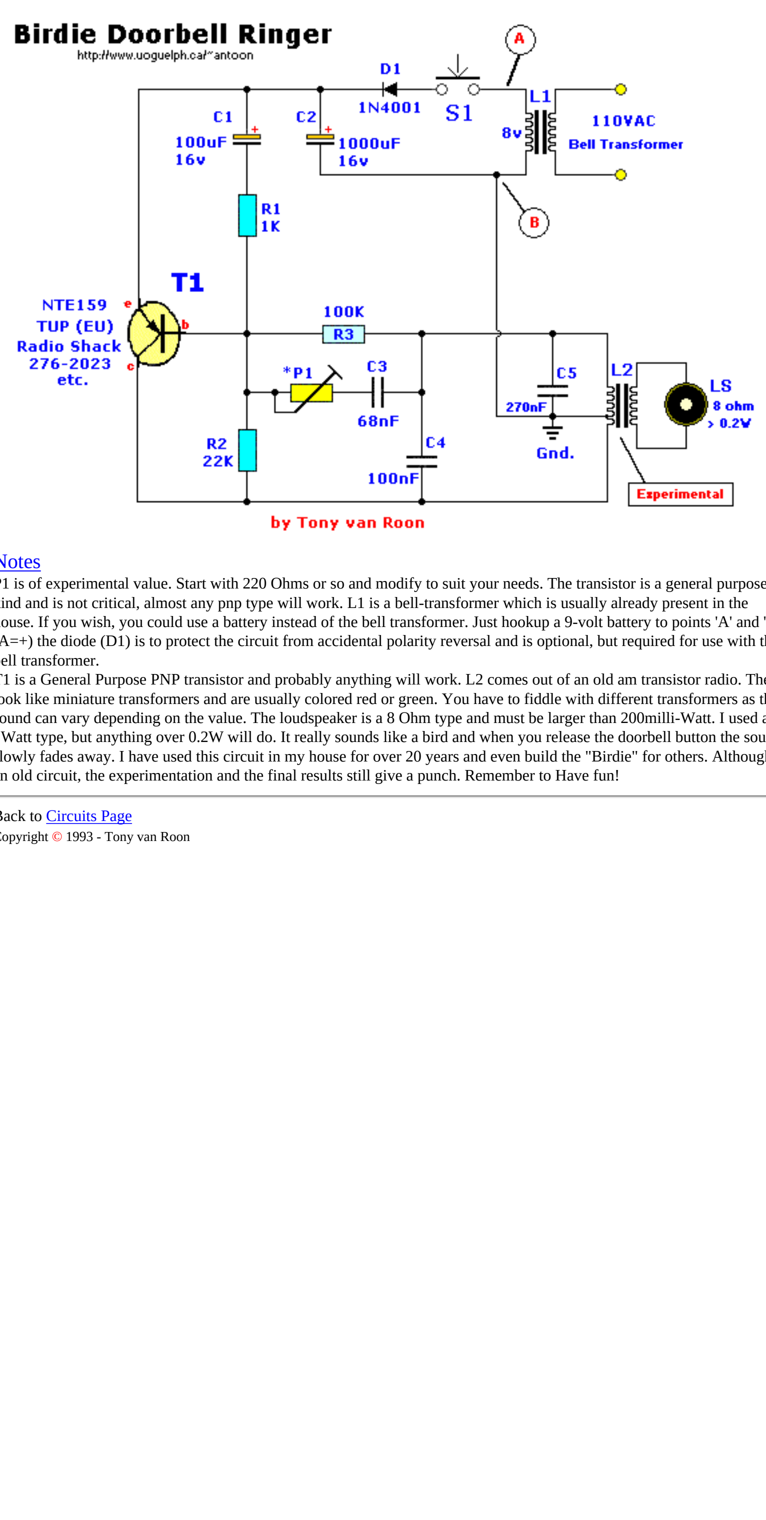

Notes

P1 is of experimental value. Start with 220 Ohms or so and modify to suit your needs. The transistor is a general purpose kind and is not critical, almost any pnp type will work. L1 is a bell-transformer which is usually already present in the house. If you wish, you could use a battery instead of the bell transformer. Just hookup a 9-volt battery to points 'A' and 'B' (A=+) the diode (D1) is to protect the circuit from accidental polarity reversal and is optional, but required for use with the bell transformer.

T1 is a General Purpose PNP transistor and probably anything will work. L2 comes out of an old am transistor radio. They look like miniature transformers and are usually colored red or green. You have to fiddle with different transformers as the sound can vary depending on the value. The loudspeaker is a 8 Ohm type and must be larger than 200milli-Watt. I used a 2Watt type, but anything over 0.2W will do. It really sounds like a bird and when you release the doorbell button the sound slowly fades away. I have used this circuit in my house for over 20 years and even build the "Birdie" for others. Although an old circuit, the experimentation and the final results still give a punch. Remember to Have fun!

Back to Circuits Page

Broadcast-Band RF Amplifier

By Tony van Roon

"Unless you own a top of the line receiver or car radio, your AM reception may be as good as it should be. The reason is that few low-to mid-price receivers and radios include RF amplifiers. By adding on yourself, however, you can improve reception at minimal cost. The RF amp shown here uses readily available parts, has wide bandwidth, and is very stable. In addition, by varying the values of several resistors, you can match the amplifier's input impedance to your antenna, and its output impedance to your radio."

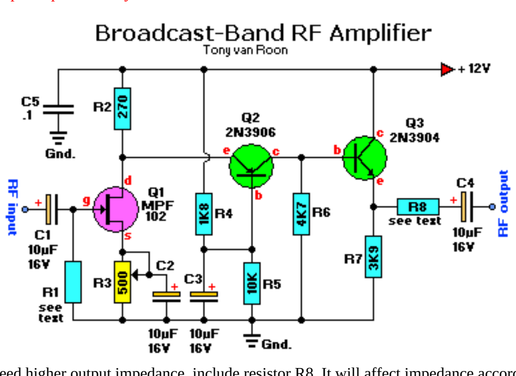

How it Works: The complete schematic is shown in **Fig. 1.** The circuit has frequency response ranging from 100Hz to 3MHz; gain is about 30dB.
Field Effect Transistor Q1 is configured in the common-source self-biased mode; optional resistor R1 allows you to set the input impedance to any desired value. Commonly, it will be 50 ohms.
This signal is he direct-coupled to Q2, a common-base circuit that isolates the input and output stages and provides the amplifier's exceptional stability.
Last, Q3 functions as an emitter-follower, to provide low output impedance (about 50 ohms). If you need higher output impedance, include resistor R8. It will affect impedance according to this formula: **R8 ~ Rout - 50**. Otherwise, connect output capacitor C4 directly to the emitter of Q3.

Construction: The circuit can be wired up on a piece of perfboard; a PC board is not necessary, although one can be used. However you build the circuit, keep lead lengths short and direct, and separate the input and output stages. You may have to install the amplifier in your receiver. Otherwise, installing it in a metal case will reduce stray-signal pickup. You'll have to provide appropriate connectors on the case. Connect the amplifier to the antenna and radio using short lengths of coax.
The circuit has only one adjustment. Connect a source of 12-volt DC power to the circuit, and adjust R3 so that there is a 1.6-volt drop across R2.
If you're not sure of the impedance of your antenna, connect a 500-ohm potentiometer for R1, and adjust it for best reception. Then substitute a fixed-value resistor for the potentiometer.
You may want to follow the same procedure with the output circuit (R8), if you're not sure of your receiver's input impedance. Common impedances are 50, 75, and 300 ohms, so the same 500-ohm potentiometer can be used.
You can connect an external antenna through the amplifier to a receiver that has only a ferrite rod antenna. Connect the amplifier's output to a coil composed of 10-15 turns of #30 hookup wire wound around the existing ferrite core, near the existing winding. To obtain best reception, experiment with the number of turns and their placement. You may need to reverse the connection to the coil if the output is weak.

```
Parts List:
R1 = see text                C1,C2,C3,C4 = 10µF, 16volt
R2 = 270 ohms                C5 = 0.1µF, ceramic disc
R3 = 500 ohm potentiometer
R4 = 1K8 (1800 ohms)         Q1 = MPF102 J-FET, or use NTE451
R5 = 10K (10,000 ohms)       Q2 = 2N3906, PNP-transistor (or use NTE159)
R6 = 4K7 (4700 ohms)         Q3 = 2N3904, NPN-transistor (or use NTE123AP)
R7 = 3K9 (3900 ohms)                  note the 'AP' extension.
R8 = see text
```

Back to Circuits page

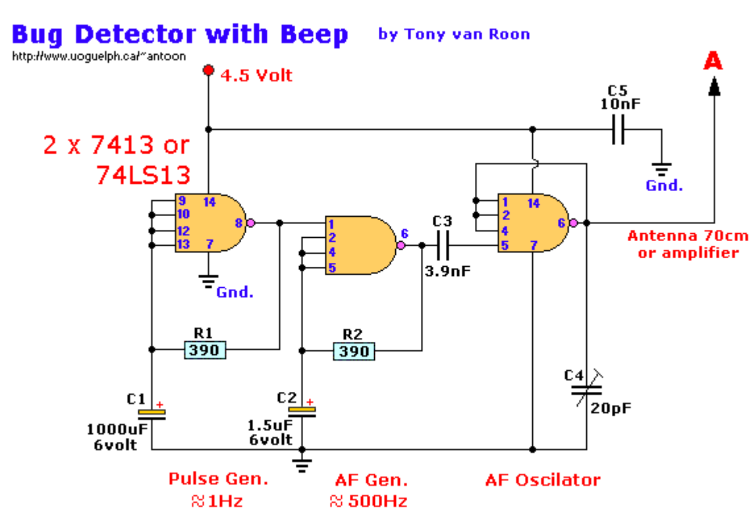

Parts List

R1 = 390 ohm, 5%
R2 = 390 ohm, 5%
C1 = 1000uF, 6V
C2 = 1.5uF, 6V
C3 = 3.9nF
C4 = 20pF, trimmer
C5 = 10nF (0.01uF)
IC = SN7413 or SN74LS13 (2)

Please note: This circuit is not open for discussion. Although working perfectly, it was experimental. I will answer no emails in regards to this circuit.

Back to Circuits page

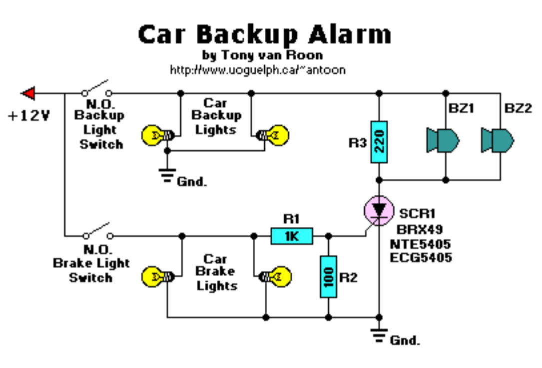

The brake lights of the automobile trigger this circuit on and off. This save the annoyance of the alarm when it is not needed. This is an older circuit which was published in Popular Electronics Magazine, but still a good circuit today.

Back to Circuits page

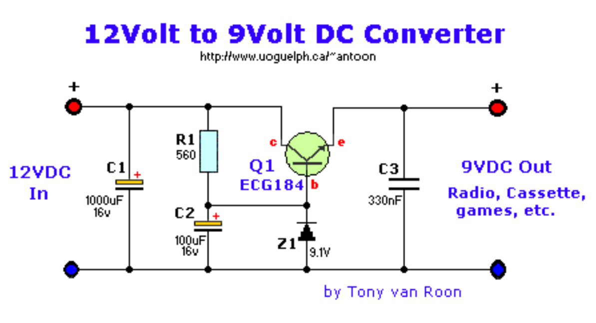

Parts List:

R1 = 560 ohm
C1 = 1000µF/16V, Electrolytic
C2 = 100µF/16V, Electrolytic
C3 = 330nF, Ceramic
Z1 = 9.1V, 0.4watt zener
Q1 = ECG184, NTE184

Notes:

To get a more precise output voltage, replace zener diode Z1 with 10V and R1 with a 1Kilo ohm potentiometer. A Coolrib for Q1 is optional. Simple circuit to power your 9 volt cassette recorder and other stuff.

Back to Circuits Menu

Christmas Lights Tester

© by Jan Hamer

Like every year around the same time, I hurried to get my Christmas tree all set up and the first thing we do when the tree is 'standing' we like to hang the lights in the tree. Okay, better first test them before putting all 50 of them in the tree. Yep! Working beautifully. I started a carefully planned organization of the lights so they would be evenly divided over the branches. Now the second string of lights, tested, yep working. In the tree with them. Putting the plugs into the receptacle and... oh no-- one series of them are on in full glory, all the others are out. Annoyed I tried to 'fix them' by trying to push each bulb further into their sockets. Still no go.

It was a crime trying to pull all the bulbs out of their sockets to measure them for continuity. Funny enough, and against the law of nature, it was not even the last bulb in the string of 50 which was defective, but number 41.
I put a new bulb in it, and yes here we go, they all light up beautifully. Alright! Happy again I again hung them in the tree. Finally the big moment arrived, as soon as I plugged them in they would shine in all their glory. Right? Oh no! The second I plugged in my lights only the first series of bulbs lighted up, same as before. All my work for nothing. Sigh...

In the mean time it was already way past midnight and so I decided for my next attempt to wait till next morning. Irritated and very annoyed I went to bed. However, I was so irritated that I couldn't sleep immediately and so was thinking of a smart way to get to the defective bulb the easy way. All over sudden I got it; if the bulb was not lit, there was no current draw either and up to the defective bulb I would measure the 115V AC (phase). Now I knew the solution, I almost fell asleep satisfied right away.

The next day I had to get some groceries in I noticed new xmas lights for a small price. $5.95 for a string of 100 lights, and with a CSA and UL sticker. Wow, I thought for that kind of money I might as well forget the repair and buy a new set. So I did. Coming home I plugged the new lights into the receptacle and yes, all 100 were doing fine.

Happy again with the new lights I again hung them in to the Christmas tree, not suspecting that this could be another rotten day. After fiddling with the lights to get them all neatly organized in the tree the moment had arrived to plug them in and awe at the fascinating beauty of those little lights. Yes? NO! Not again. Isn't this to explode out of your skin! Angry I was looking for a solution, but there was none. I finally decided to put a circuit together on a piece of experimenters board from Radio Shack.

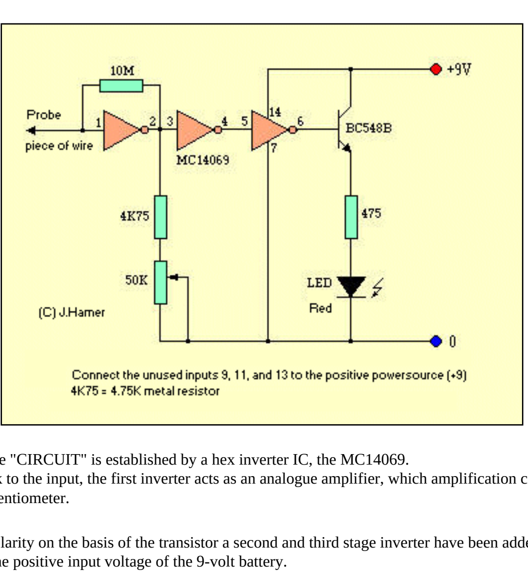

The heart of this little "CIRCUIT" is established by a hex inverter IC, the MC14069.
By positive feedback to the input, the first inverter acts as an analogue amplifier, which amplification can be adjusted a bit via the 50K trim potentiometer.

To get the correct polarity on the basis of the transistor a second and third stage inverter have been added the same way. The others I put to the positive input voltage of the 9-volt battery.
When you touch a voltage carrying wire, with the antenna connected to pin 1 of the MC14069, the led will light up. The antenna is just a sturdy small piece of wire.

Armed to the teeth with this little tester I re-investigated the cords. At the first try I of course picked the wrong wire; the neutral (0). The moment I tried it on the other wire (phase) the led came on right away. I followed the cord from bulb to bulb sliding the piece of antenna wire over the cord until I hit the broken xmas bulb and the led went out. Aha! Finally got the bloody little sucker! The broken bulb showed voltage on one site of the wire (led on) and none at the other end of the bulb (led off). This little tester can also be used for other AC applications, like checking for broken wires behind the wall and stuff.

If you have questions about this circuit, please direct them to Jan Hamer or visit his website in the Netherlands (if you can read Dutch).

Published & Translated from Dutch into English with permission of Jan Hamer, The Netherlands.

Back to Circuits page

Clock Generator

by Tony van Roon

http://www.uoguelph.ca/~antoon

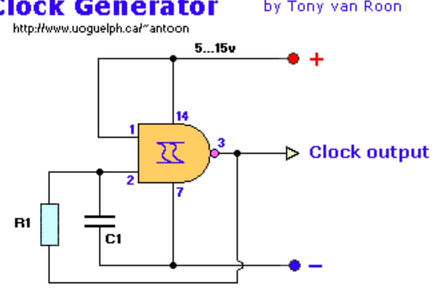

o - Excellent clock generator to drive 4017 type cmos circuits.
o - R1 = 10K to 10M, C1 = 100pF to 47uF.
o - Fo is ±1Kz when R1=100K and C1=10nF.
o - Input voltage can be from 5 to 15V.

Please note: I will answer no email in regards to this circuit.

Back to Circuits page

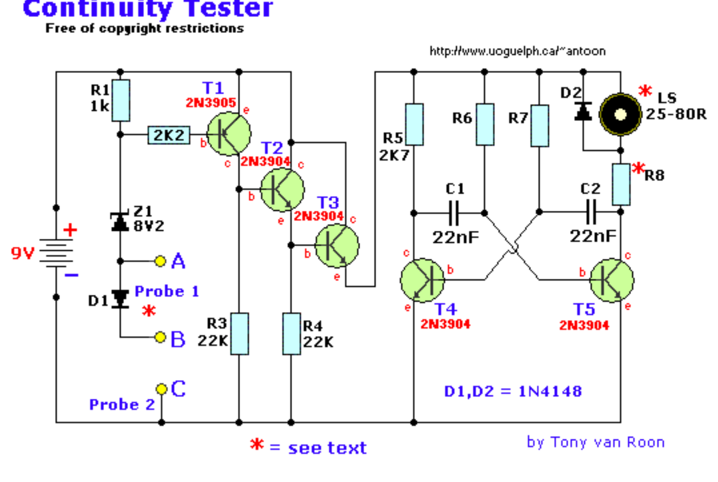

Parts List:

```
   R1 = 1K                 D1,D2 = 1N4148
   R2 = 2K2                   Z1 = 8V2, 1/4 watt
R3,R4 = 22K                   T1 = 2N3905 (PNP)
   R5 = 2K7              T2,3,4,5 = 2N3904 (NPN)
R6,R7 = 56K              9volt Alkaline battery
   R8 = *See text        suitable loudspeaker
C1,C2 = 22nF             housing & probes
```

An on-off switch is not necessary. D1 is used when the battery is brand-new and giving over the nominal 9 volt, T1, T2 and T3 acting as the switch for supplying power to the multivibrator.

Design Considerations:

Several simple circuits were tried -- a lamp, battery and probes still demanded the attention of the eyes; replacing the lamp with a buzzer was more successful but needed some three to four volts and gave no indication of a series semiconductor junction if the polarity was correct while the current flow was large enough to damage the more delicate devices within the circuit under test. An extension of the principle to operate an astable (multivibrator) type of oscillator gave good audibility but would operate from zero through to several thousands of ohms and so was too general an indication.

A set of specifications was becoming apparent; (1) probe current to be small; (2) probe voltage to be as low as possible, preferable less than 0.3V to avoid seeing germanium or silicon junctions as a continuous circuit; (3) no on/off switch to be used.
The above circuit was the result and several have been designed and are earning their keep for both "heavy" electricians and electronic technicians.

How it works:

Starting with a 9 volt supply, when the probes are shortcircuited there is a 8.2 volt drop accross the zener diode Z1 leaving a maximum of 0.8 volt across R1. Aplication of Ohms' Law shows that a maximum current of 0.8/1,000 = 0.8 mA lows via the probes and this satisfies the first design requirement of low probe current.

T1 is a silicon type and the base-emitter voltage will need to be about 0.5 to 0.6 volt to forward-bias the junction and initiate collector current. With a maximum of 0.8 volt availabe across R1 it is seen that if a semiconductor junction or resistor is included in the outside circuit under test and drops only 0.3 volt then there will be 0.5 volt remaining across R1, barely enough to bias T1 into conduction.

Assuming that the probes are joined by nearly zero resistance, the pd across R1 is 0.7 - 0.8 volt and T1 turns on, its collector voltage rising positively to give nearly 9 volt across R3. T2 is an emitter follower and its emitter thus rises to about 8.3 volt and this base voltage on T3 (a series regulator circuit or another emitter-follower if you prefer it) results in some 7.7 volt being placed across the T4 - T5 oscillator circuit. All the transistors are silicon types and unless the probes are joined, the only leakage current flows from the battery thus avoiding the need for an On-Off switch. When not in use, the battery in the tester should have a life in excess of a year. My own unit lasted for more than 2 years with one standard Alkaline battery.

Descriptive Notes:

The output from the speaker is not loud but is more than adequate for the purpose. I used a small transistor radio loudspeaker with an impedance of 25 - 80 Ohms. The resistance should be brought up to 300 ohms by adding series resistor R8. Example, if your speaker is 58 ohms, then R8 = 242 ohms.

An experiment worth doing is to select the value of either C1 or C2 to produce a frequency oscillation that coinsides with the mechanical resonant frequency of the particular loudspeaker in use. Having choosen the right value, which probably lies in the range of 10n - 100n, the tone will be louder and more earpiercing. A "freewheel" diode D2 is connected across the transducer since fast switching action of the oscillator circuit can produce a surprisingly high back e.m.f. across the coil and these high voltages might otherwise lead to transistor damage or breakdown.

Zener diodes do not provide an absolutely constant volt-drop regardless of current; at the 0.8 mA design current an 8.2 volt diode will quite possibly give only about 8.0 volt drop since test current for zener selection and marking is typically 5 mA or more. A further possible source of error is the battery; the one suggested, nominally provides 9V but a brandnew one may be as much as 9.2 - 9.6V until slightly run-down and this "surplus" voltage, combined with an "under-voltage" zener volt-drop will leave considerably more than the forecast voltage available at the probes. A silicon diode D1 is therefore connected in series with the zener to decrease the probe voltage by a further 0.6 volt or so.

During your final testing and before boxing your circuit, the most suitable connection, A or B, is selected for the positive probe wire. The aim is to have the circuit oscillating with short circuited probes but to stop oscillation with the least amount of resistance or the inclusion of a diode (try both ways) between the probes.

No sensitivity control is fitted because I don't think it is worthwhile nor necessary and would spoil the simplicity of the circuit.

There is no easy way to proof the unit against connection to the supply. Be ***careful*** if checking AC line wiring and switch off first. In a similar way, if checking electronic apparatus for unwanted bridging between tracks, for instance or a suspected crack in a PCB (Printed Circuit Board) track switch off power first also. **DISCHARGE ALL LARGE CAPACITORS.** Good luck!

Click here for the PCB.

The pcb pattern above is shown full-size at 73mm x 33mm (2-7/8" x 1-1/4")

Back to Circuits page

http://www.uoguelph.ca/~antoon/circ/cntnpcb.gif

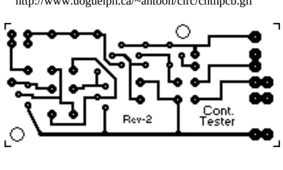

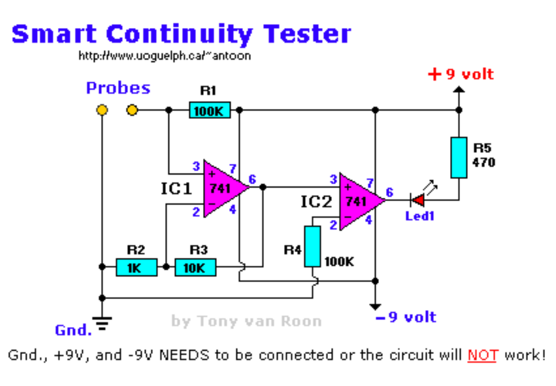

Parts List:

```
   R1 = 100K                  Led1 = Your choice. I used High Brightness LED, RED, 5mm
   R2 = 10K                IC1,IC2 = LM741, Op-Amp
   R3 = 1K                           9 volt Alkaline battery, case, probes
   R4 = 100K
  *R5 = 470 ohm  (see text)
```

How it works:

Occasionally you need a continuity test between two points in an electronic circuit. Unfortunately, most continuity testers are prone to "lie". They don't do that deliberately, but if they see a small resistance, they *still* tell you that you have continuity. They just don't know any better.
This unit is different. If you have continuity it will tell you so. And if you're reading even a low resistance through a component, the unit will tell you that as well.
The unit uses two LM741 op-amps. It offers a short-circuit test current of less than 200µA. It detects resistance values of less than approximately 3 ohms. Nicest of all, it will not break down a PN junction. Since then I have long ago upgraded to the 'Latching' tester since it suits the type of work I do better.
In building this circuit, use good electronic practice, mounting the 741's in suitable ic sockets on perf-board. While there's nothing critical here, keep the work neat, and leads nice and short. *If needed, reduce the value of R5 to 330 ohms if you are using an older type led. When you're done, mount the unit in a small plastic box. A small dab of silicon rubber adhesive keeps the 9-volt battery in place at the bottom of the case, and will last a long time.
At the bottom of the page I have included the diagram how to connect the dual 9v power.

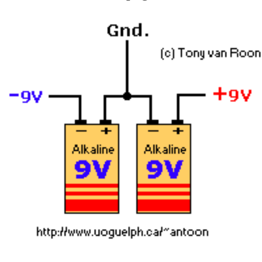

Just in case you're just starting out in electronics, here is how to get the -9, +9, and Gnd(Ground) connections.

A small hole with a grommet keeps the leads (probes) together. Another hole with a grommet holds the LED in place on top of the box where it is plainly visible. This makes a nice one-evening project. Enjoy!

Caution:

There is no easy way to proof the unit against connection to the supply. Please, please be ***careful*** if checking AC line wiring and switch off first. In a similar way, if checking electronic apparatus for unwanted bridging between tracks, for instance or a suspected crack in a PCB (Printed Circuit Board) track switch off power first also. Always practice good safety and ***think-before-you-do!***

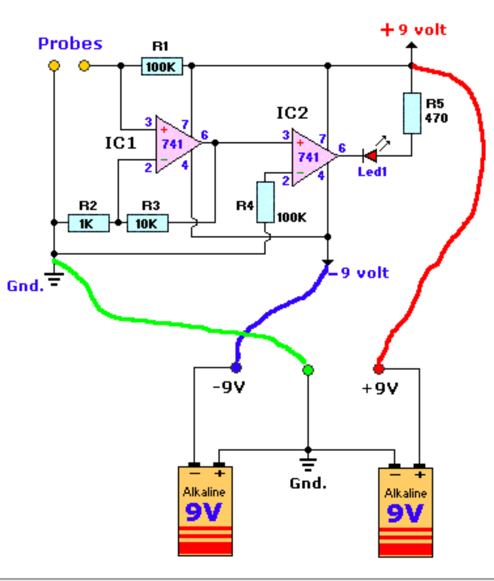

Back to Circuits Menu

Latching Continuity Tester

by Tony van Roon

"This Latching Continuity Tester can help you locate those difficult-to-find intermittent short and opens that other testers always seem to miss. It has been part of my workbench for many years and performs superb. I have solved many intermittent problem with this highly flexible unit."

A continuity tester is a must on every service bench for testing cables, pcboards, switches, motors, plugs, jacks, relays, and many other kinds of components. But there are times when a simple continuity test (or your multi-meter) doesn't tell the whole story. For example, vibration-induced problems in automobile wiring can be extremely difficult to detect because a short or open is not maintained long enough for a non-latching tester to respond. And an anolog meter is too slow to react.
This latching continuity tester detects intermittent (and steady state) opens and shorts. The tester will detect and latch on an intermittent condition with a duration of less than a millisecond. In addition, it provides both visual and (defeatable) audio indicators, uses only one inexpensive and easy-to-find IC, and can be built from all new parts for about $35, or less if you have a well-stocked junk box.

Circuit Elements:

The heart of the circuit is a 4093 quad two-input NAND Schmitt trigger, one gate of which is shown in Fig. 1-a. The gate functions as shown in Fig. 1-b. Nothing happens until the *enable* input goes high. When that happens, the output responds to the input as follows.

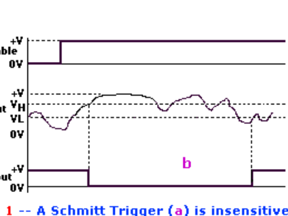

As long as the input voltage stays between V_H and V_L, the output stays high. But when the input goes above V_H, the output goes low. The output will not go high again until the input goes below V_L. That characteristic is what gives the Schmitt trigger its ability to "square-up" a slowly changing input signal.

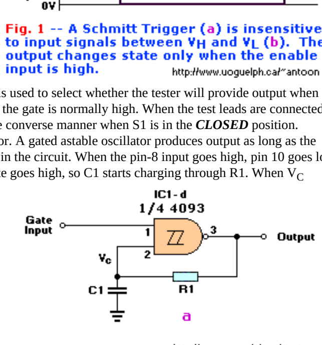

Fig. 1 -- A Schmitt Trigger (a) is insensitive to input signals between V_H and V_L (b). The output changes state only when the enable input is high. http://www.uoguelph.ca/~antoon

The Schmitt trigger is ideally suited for our application because it is not dependent on edge triggering, and because both slow and fast signals trigger it when either threshold is exceeded.
We use two gates of the 4093 as a combination detector and latch. The gates are cross connected to form an SR (*S*et-*R*eset) flip-flop. When pin 12 goes low, pin 11 will go high. That high may be used to enable an LED or other indicator. Switch S1 is used to select whether the tester will provide output when it detects an open or a short. In the ***OPEN*** position, pin 12 is held low, so the output of the gate is normally high. When the test leads are connected across a short, pin 12 is pulled high, so the output drops low. The circuit works in the converse manner when S1 is in the ***CLOSED*** position.
As shown in Fig. 2-a, we use another Schmitt trigger to build a gated astable oscillator. A gated astable oscillator produces output as long as the ***GATE*** input is high. Fig. 2-b shows the waveforms that are present at various points in the circuit. When the pin-8 input goes high, pin 10 goes low, and C1 starts discharging through R1. When V_C falls below V_L, the output of the gate goes high, so C1 starts charging through R1. When V_C exceeds V_H, the output again drops low. Oscillation continues in that way as long as the gate input remains high. The frequency of oscillation is given by a fairly complex equation that can be simplified, for purposes of approximation, as F = 1 / R1C1.

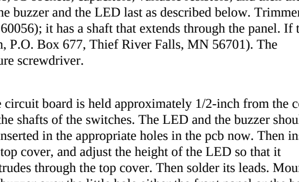

Putting it all together:

The complete circuit is shown in Fig. 3. In that circuit, IC1-a and IC1-b function as the flip-flop/detector. The output of IC1-a is routed through S4, ***AUDIO***. When that switch is closed, IC1-d is enabled and an audio tone will be output by BZ1. The frequency of that tone can vary from 1000Hz to well above the audio range (100KHz), according to the setting of R4. In addition, R4 varies frequency and volume simultaneously, so you can set it for the combination that pleases you best. Originally we used a PM (Permanent Magnet) speaker. When the detector has not been tripped, the full power-supply voltage is across the buzzer, but no current is drawn. The reason is that the piezo element is like a capacitor and does not conduct DC current. When the circuit is oscillating, the buzzer consumes a current of only about 0.5 milli-amp. The output of the flip-flop/detector circuit also drives IC1-c. If S2 is in the ***AUTO*** position, the output of IC1-c will automatically reset the flip-flop after a period of two to six seconds, depending on the position of R7. If S2 is in the ***MANUAL*** position, the LED will remain lit (and the buzzer will continue buzzing, if S4 is on) until manual ***RESET*** switch S3 is pressed

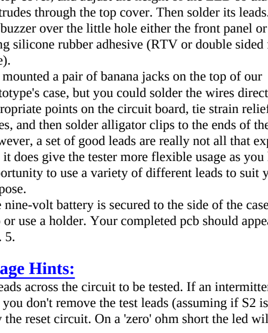

Fig. 2 -- An Astable Oscillator (a) may be built from a single gate, a resistor and a capacitor. The circuit oscillates at a frequency of about 1/R 1C1 whenever the gate input is high (b).

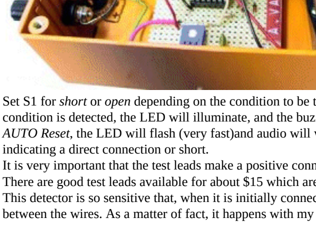

Construction:

Picture at the left shows the tester from the back. The hole is for the piezo buzzer. The circuit may be built on a piece of perfboard or Vero-board, or on a PCB. The PCB is designed to take board-mounted switches, which makes a neat package and eliminates a rat's nest. (see prototype picture below).
Referring to Fig. 4, mount and solder the components in this order: diodes, fixed resistors, IC-sockets, capacitors, variable resistors, and then the pcb mounted switches. The regular ones will work too it just means more wire. Mount the buzzer and the LED last as described below. Trimmer potentiometer R7 is manufactured by Piher (903 Feehanville Drive, Mount Prospect, IL 60056); it has a shaft that extends through the panel. If the Piher pot is unavailable, an alternate is available from Digi-Key (701 Brooks Ave, South, P.O. Box 677, Thief River Falls, MN 56701). The disadvantage of the alternate is that it has no shaft, so it must be adjusted using a miniature screwdriver.

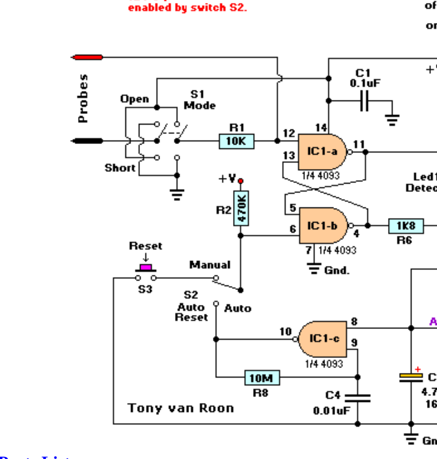

The circuit board is held approximately 1/2-inch from the cover by the shafts of the switches. The LED and the buzzer should be inserted in the appropriate holes in the pcb now. Then install the top cover, and adjust the height of the LED so that it protrudes through the top cover. Then solder its leads. Mount the buzzer over the little hole either the front panel or the back using silicone rubber adhesive (RTV or double sided foam-tape).
We mounted a pair of banana jacks on the top of our prototype's case, but you could solder the wires directly to the appropriate points on the circuit board, tie strain reliefs in the wires, and then solder alligator clips to the ends of the wires. However, a set of good leads are really not all that expensive and it does give the tester more flexible usage as you have the opportunity to use a variety of different leads to suit your purpose.
The nine-volt battery is secured to the side of the case with a clip or use a holder. Your completed pcb should appear as in Fig. 5.

Usage Hints:

Set S1 for *short* or *open* depending on the condition to be tested. Then connect the test leads across the circuit to be tested. If an intermittent condition is detected, the LED will illuminate, and the buzzer will sound (if S4 is on). If you don't remove the test leads (assuming if S2 is set for *AUTO Reset*, the LED will flash (very fast)and audio will warble at a rate determined by the reset circuit. On a 'zero' ohm short the led will flicker, indicating a direct connection or short.
It is very important that the test leads make a positive connection with the circuit to be tested. In fact, clips should be used instead of test leads. There are good test leads available for about $15 which are hardened stainless-steel and have sharpened points which were my personal choice. This detector is so sensitive that, when it is initially connected across a long length of parallel wires or traces, it may latch due to capacitance between the wires. As a matter of fact, it happens with my model all the time. Just press the reset switch S3 (if in manual mode) when that occurs.

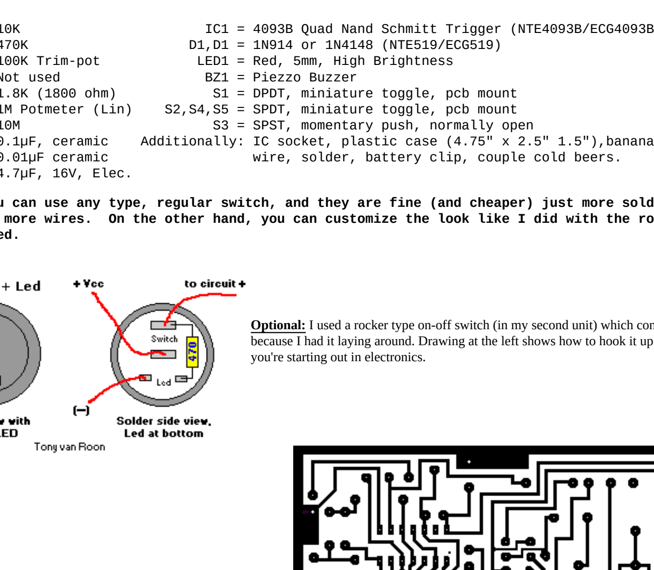

Parts List

```
   R1 = 10K                         IC1 = 4093B Quad Nand Schmitt Trigger (NTE4093B/ECG4093B)
R2,R3 = 470K                      D1,D1 = 1N914 or 1N4148 (NTE519/ECG519)
   R4 = 100K Trim-pot              LED1 = Red, 5mm, High Brightness
   R5 = Not used                    BZ1 = Piezzo Buzzer
   R6 = 1.8K (1800 ohm)              S1 = DPDT, miniature toggle, pcb mount
   R7 = 1M Potmeter (Lin)    S2,S4,S5 = SPDT, miniature toggle, pcb mount
   R8 = 10M                          S3 = SPST, momentary push, normally open
   C1 = 0.1µF, ceramic    Additionally: IC socket, plastic case (4.75" x 2.5" 1.5"),banana jacks,
C2,C4 = 0.01µF ceramic                  wire, solder, battery clip, couple cold beers.
   C3 = 4.7µF, 16V, Elec.
```

Note: You can use any type, regular switch, and they are fine (and cheaper) just more soldering and more wires. On the other hand, you can customize the look like I did with the rocker switch/led.

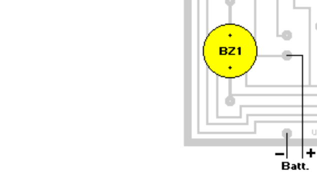

Optional: I used a rocker type on-off switch (in my second unit) which contains an led because I had it laying around. Drawing at the left shows how to hook it up just in case you're starting out in electronics.

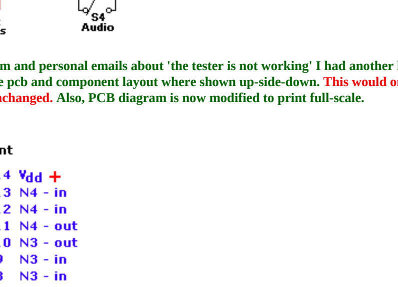

Click here for the PCB.

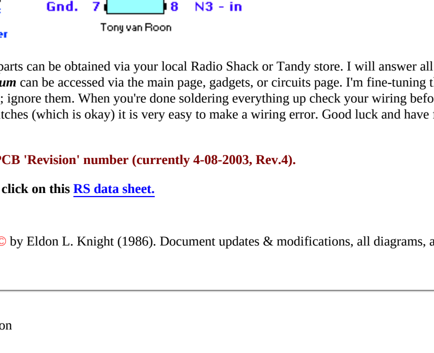

ERROR FIX: After several messages both in the message forum and personal emails about 'the tester is not working' I had another look at this page. Turns out, schematic diagram is correct but both the pcb and component layout where shown up-side-down. This would only affect those of you making their own pcb. Everything else is unchanged. Also, PCB diagram is now modified to print full-scale.

The assembled pcboard reveals the low parts-count and easy assembly of the continuity tester

I fully support this project. Most parts can be obtained via your local Radio Shack or Tandy store. I will answer all questions but via the message forum only. ***Tony's Message Forum*** can be accessed via the main page, gadgets, or circuits page. I'm fine-tuning this project at this time. There are a couple of extra holes on the pcb; ignore them. When you're done soldering everything up check your wiring before connecting the battery. Especially if you use non-pcb switches (which is okay) it is very easy to make a wiring error. Good luck and have fun building this most versatile project.

ALWAYS check for the latest PCB 'Revision' number (currently 4-08-2003, Rev.4).

For Radio Shack part numbers click on this RS data sheet.

Copyright and Credits:

Back to Circuits page

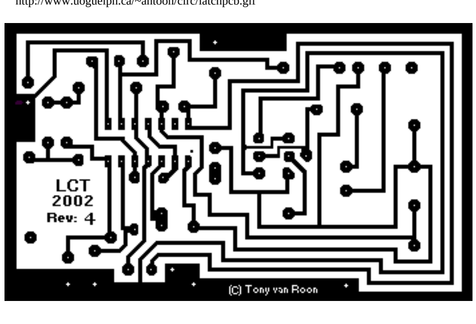
LCT
2002
Rev: 4
(C) Tony van Roon

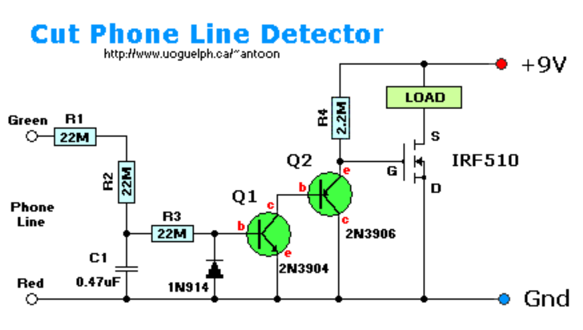

Parts List

```
R1,R2,R3 = 22M, Resistor
      R4 = 2.2M, Resistor
      C1 = 0.47uF, 250V, Mylar, Capacitor
      D1 = 1N914, NTE519, or other small signal diode
      Q1 = 2N3904, NTE123AP, Transistor
      Q2 = 2N3906, NTE159, Transistor
      Q3 = IRF510, NTE2382, Power MosFet
```

Description:

This circuit speaks for itself. When the phone line is okay, Q1 acts as a short with a very high ohms value via R1, R2, and R3 for a total of about 66 MegaOhm so very high. When the phone line is cut (open), it activates the MosFet (Q3) via transistor Q2 to drive the load. Substitutes are fine, none of the components are critical.
The 'Red' and 'Green' wires of the telefphone wire are *NOT* the positive and negative. They are the TIP and RING wires. So, don't get confused why the red telephone wire is connected to Gnd.

The 'LOAD' can be anything you like. A relay, motor, lamp, tape-recorder, stereo, security system, or whatever.
Keep in mind that Phone companies don't like to have anything 'directly' connected to their wires for obvious reasons, so use this circuit at your own risk. If you like to play it save use an Opto-Isolator or something, which also will keeps your phone company happy. They don't like anything hooked up to their wires directly.

Return to Circuits Page

Dark/Light Activated Relay

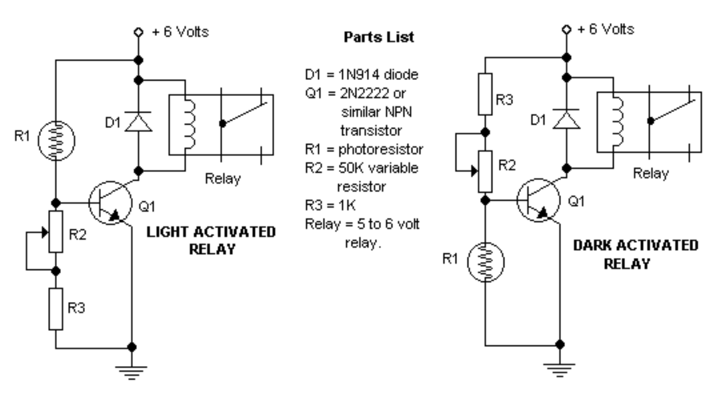

Additional Notes

None of the parts are critical and easy available. The potmeter adjust the trigger 'on' level. The diode in the diagram shows to be 1N914. This is ok if you have a light-duty relay, also the 1N914 is a signal diode so actually does not qualify. Use a 1N4001 (or better) instead. A couple of substitutes for the 2N2222 transistor are: NTE123A, ECG123A, PN100, etc.

Back to Circuits page

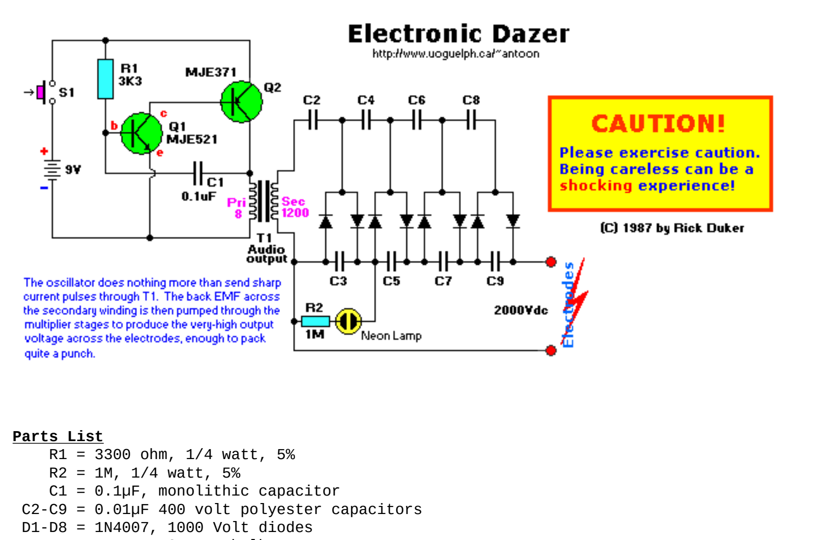

Parts List

```
    R1 = 3300 ohm, 1/4 watt, 5%
    R2 = 1M, 1/4 watt, 5%
    C1 = 0.1µF, monolithic capacitor
 C2-C9 = 0.01µF 400 volt polyester capacitors
 D1-D8 = 1N4007, 1000 Volt diodes
  Neon = Type NE-2 neon bulb
    Q1 = MJE521 NPN power transistor (40V/40W/4A)
    Q2 = MJE371 PNP power transistor (40V/40W/4A)
    T1 = 1200:8 ohm audio power transformer (Armaco AT-49)
    S1 = SPST momentary-contact, pushbutton switch
```

Additionally:
9-volt battery clip, 10 x 5 x 2.5cm plastic case, 7.5 x 4cm perfboard or pcboard, two 8/32 x 1-1/4 bolts and nuts for electrodes, adhesive for mounting NE1, circuit board standoffs (optional), hookup wire, solder, etc.

Substitutes:
Q1 (MJE521), the NTE184 or 2N5190 will work, and for Q2 (MJE371) the NTE185 or 2N5193 will work. T1: Mode 60-282-0 (Audio) about $2.00, Armaco AT-49 (Audio) about $5.00, Hammond 141P (Audio) about $19.00. I have not experimented with the 1000:8 ohm type. Try it. No guarantees it will work. Why an audio power transformer? The windings are much finer and the overall size of this transformer is much smaller than the average power transformer. Compare it this way, holding a mini-cell phone versus a stone brick. Again, and just in case you don't know, the Audio Transformer mentioned for this project is measured in **OHMS** (impedance) and not turns or windings.

WARNING: THIS DEVICE IS NOT A TOY! We present it for EDUCATIONAL and EXPERIMENTAL purposes ONLY. The circuit develops about 2000 volts at a respectable amperage. It can cause you pain and even damage if you become careless and touch its output terminals. The unit can also damage property as well so use it wisely. You should NEVER use the device on another person! It may not be against the law to possess such a device in your area, but if you use it on someone you may be deemed liable a a civil and/or criminal action suit. Don't just follow the golden rule after constructing the project, instead just don't do it unto anyone. Included in the article are a number of instructions on how to build, test, and operate the Dazer; all of them must be followed to the letter. **Do not deviate from the procedure.**

The *Electronic Dazer* is a modern, portable, non-lethal-personal-protection appliance. It generates high potential energy to ward off vicious animals or other attackers. It is an aid to help escape from a potentially dangerous situation. This device develops about 2000 volts. Higher voltages may be attained by adding additional multiplier stages, but it should be noted that those stage(s) will also increase the overall size of the unit.
The Dazer is very compact, being built into a small plastic case. It is powered by a single 9-volt Alkaline battery.
The high voltage is applied to two electrodes which require only light contact to be effective. When touched with the Dazer, the victim or animal will receive a stunning, but non-lethal jolt of electricity that will usually discourage any further encounters.
The electronic Dazer is a power supply which consists of a micro-size regenerative amplifier/oscillator coupled to an energy multiplier section. It should not be confused with cheap induction-type cattle prods. The Dazer is more versatile than other high-voltage stun devices currently being sold. Those devices are basically high-voltage, AC generators which jam the nervous system. However, the Dazer may be used for heating and burning applications, or anywhere a high voltage DC supply is required.
*(**Tony's Note:** Don't confuse the Dazer with a Stun-Gun. The Dazer emits high voltage about 2000V **DC**, a Stun-Gun can generate VERY High Voltages varying from 15,000V to 650,000V**AC** (as claimed by some manufacturers), and can cause personal injury or even death. Stun-Guns are considered banned illegal fire-arms, you risk criminal prosecution if law enforcement finds one in your possession (Canada, not sure about USA).*

How it Works:
Refering to the schematic diagram, the two power transistors Q1 and Q2, form a regenerative amplifier operating as a power oscillator. When Q1 turns on, Q2 turns on and that shorts the power supply across the primary of T1. That current pulse induces a high voltage in the secondary of T1. As C1 charges, Q1 turns on again and the cycle repeats itself. Therefore, a rapid series of DC pulses are generated and stepped up by T1 to approximately 300 volts at full battery charge. That voltage is rectified and increased by the voltage multiplier section which consists of C2 to C9, and D1 to D8. The final output is approximately 1500-2000 volts. The neon bulb 'Neon' is used as a charge indicator and indicates that the unit is charged and operating properly, but can be left out.

Check out fig. 1 at the right; these are standard voltage doublers found in many data books and others like the NTE, Newark, or Electro-Sonic catalogs. They can even be found on the internet. Just do a search on one of the major search engines like Yahoo or Google and search for 'voltage doubler' or 'HV'.

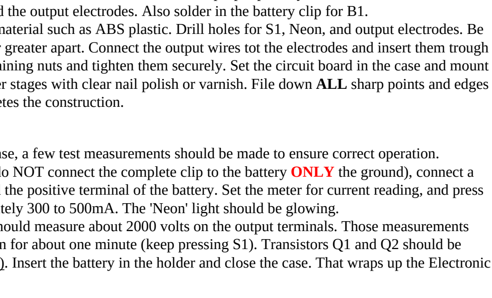

Fig. 1

Construction:
As with all projects start out by laying out and identifying. If you do not wish to make a printed-circuit-board, then you may use perf board as long as you remember to keep the leads of all high-voltage components isolated. That is to prevent sparks from arcing across your board. A 4 x 7.5 cm of perfboard is suitable for that purpose.
The first components you should mount are the two transistors Q1, Q2, transformer T1, resistor R1, and neon bulb 'Neon'. Solder them in place (for PCB construction) being sure that the transformer and transistors are hooked up correctly. Apply a small amount of adhesive to the base of NE1 to hold it securely in place.
Mount D1 to D8 and C2 to C9 on the board and make all solder connections. Note proper polarity of the diodes. The off-board components are next. Solder in leads for S1, and the output electrodes. Also solder in the battery clip for B1.
Build the enclosure from some nonconductive material such as ABS plastic. Drill holes for S1, Neon, and output electrodes. Be sure that the output electrodes are about a cm or greater apart. Connect the output wires tot the electrodes and insert them trough holes from inside of the case. Thread on the retaining nuts and tighten them securely. Set the circuit board in the case and mount S1, securing with a nut. Coat the voltage doubler stages with clear nail polish or varnish. File down **ALL** sharp points and edges to prevent sparking at those points. That completes the construction.

Testing:
Before inserting the battery and closing the case, a few test measurements should be made to ensure correct operation.
With the ground clip connected to the battery (do NOT connect the complete clip to the battery **ONLY** the ground), connect a volt or multimeter between the positive clip and the positive terminal of the battery. Set the meter for current reading, and press S1. You should measure a current of approximately 300 to 500mA. The 'Neon' light should be glowing.
With a high voltage multimeter or VOM, you should measure about 2000 volts on the output terminals. Those measurements indicate proper circuit operation. Let the unit run for about one minute (keep pressing S1). Transistors Q1 and Q2 should be warm, but not hot to the touch (BE CAREFUL!). Insert the battery in the holder and close the case. That wraps up the Electronic Dazer. (see pictures below)

Operation and Use:
CAUTION! Activate the unit by pressing S1. The Neon-bulb will light indicating the dazer is fully charged and ready to use. Notice also that only one pole of the neon light will glow, indicating DC voltage present. **It is important to remember that the device holds a charge even after S1 is off.** To discharge, (do not press S1) touch the electrodes to a metal object and note the healthy spark discharge.
The Electronic Dazer was designed as a self-defense weapon for use against vicious dogs or other attacking animals. The device is most effective when the electrodes contact an area of low resistance such as skin or flesh. Those include the snout or mouth since the resistance of those areas are much lower than areas of hair or of fur. The electrodes could be pointed to penetrate these areas better. The dazer generates great stopping power. One contact will give a powerful jolt and should discourage any further attacks.
The device can burn and heat materials with low resistance. Those include flesh, moistened paper or wood, etc. That makes the unit potentially hazardous to humans. Remember, the dazer is *not* a toy but a quality electrical appliance and therefore must be treated accordingly. Use the utmost discretion with this device!
Another use for this device is as a high voltage DC power supply. It may be constructed as variable power supply if output taps are taken from various stages of the voltage multiplier section. Remember, always disconnect the battery and fully discharge the capacitors before working with the circuitry.
Note that if you decide to 'Turbo-charge' your unit, select diodes and capacitors which can handle the extra voltage. This unit can easily be damaged (and stops working) by incorrect parts choice, careless (sharp) soldering joints, and so on. So be careful and watch yourself. Again, being careless is gonna hurt!!!

Copyright and Credits:
The author and owner of the original project is Rick Duker. Gernsback Publishing is out of business. Project was published in Hands-on Electronics magazine, 1987. Posted with permission of Rick J. Duker, 2003. Copyright Rick Duker, 1987.

Again, this project is for educational and/or laboratory purposes only and even so, it is your responsibility to check with local, provincial, and federal law enforcement in regards to the legality for having in possession or the construction of this high voltage device. I take no responsibility, whatsoever, for the use, experimentation, or having possession of this high voltage device.

Back to Circuits page

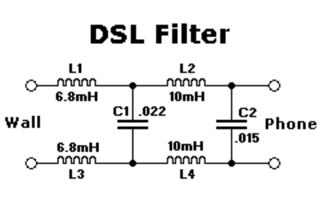

Parts & Description

```
L1,L2 = 6.8mH, inductor
L3,L4 = 10mH, inductor
   C1 = 0.022uF, 250-600V
   C2 = 0.015uF, 250-600V
```

The above diagram is a standard low-pass telephone line filter (L1,C1,L3,C2). L2 and L4 are needed since we're dealing with the 'Tip' and 'Ring' of a phone line.

I used a similar circuit on 3 phone-lines back in the early 80's when I was running Scottsdale BBS and the filters performed fine. Additional info can be found in the ARRL Handbook, etc. For the two capacitors, the higher the voltage the better, but the 400V types are the easiest to obtain.

Back to Circuits page

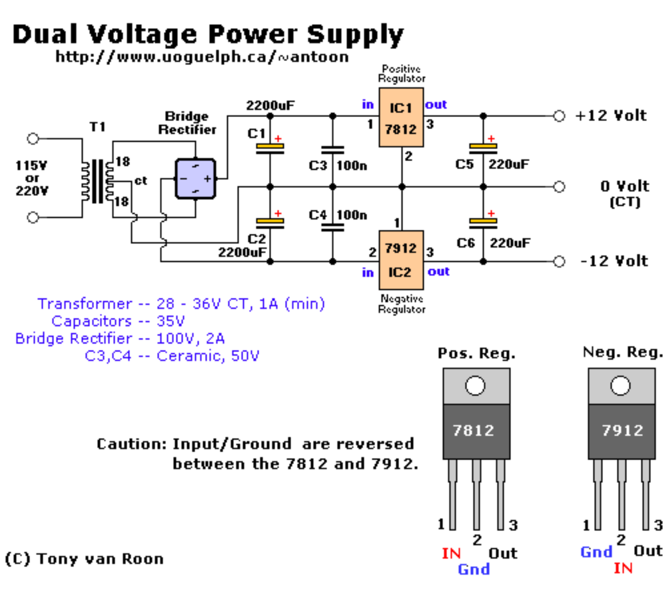

Back to Circuits page

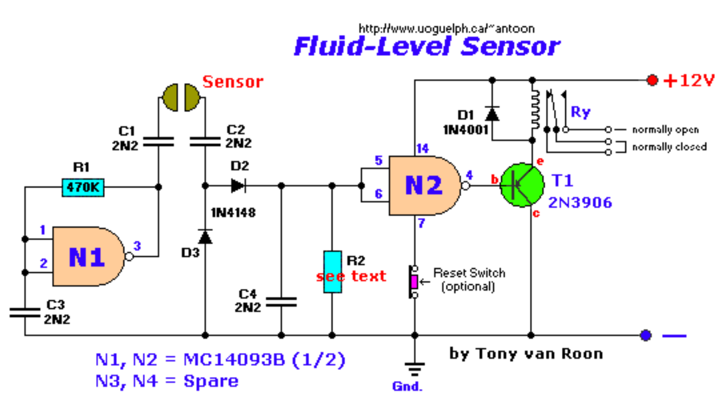

Parts List:

```
   R1 = 470K                  N1,N2 = MC14093B
   R2 = 15M*                     T1 = 2N3906 (these will work also: PN200, 2N4413)
C1-C4 = 2N2 (2.2nF)                        (NTE159, ECG159, BC557, BC157, TUP)
   D1 = 1N4001                   Ry = Relay (12V or matching supply voltage)
 D2,3 = 1N4148               Sensor = Stainless Steel probes, brass, chrome, etc.
```

The above circuit uses an AC-sensing signal to eliminate electrolytic corrosion on the probes. The AC signal is rectified and used to drive Transistor T1 that drives the relay. The relay is a 12-V type of your choice.
Transistor T1 can also be a TUP. Check out the **TUP/TUN** document for a large selection of European transistors and what this system is all about.
Diodes D2 and D3 are both small signal diodes (1N4148). Diode D1 (1N4001) eliminates transients and possible sparking over the relay coil. Do not use a signal diode for this but a rectifier diode like the 1N4001 or other types of the 1N400x series.
Resistor R2 controls the sensitivity. Also your choice. Select one between 10 and 22 Mega-ohm, or use a trim-pot.
The **MC14093B** is a CMOS quad 2-input NAND Schmitt trigger. The supply voltage can be between 3.0 and 18Vdc. It is pin-for-pin compatible with the CD4093. The capacitors are standard ceramic types but try others if you have them available.

Please note: Unused **in**puts ***MUST*** be tied to an appropriate voltage level, either ground or +12V. In this case, tie input pins 8, 9, 12, and 13 to either ground or +12v. Unused **out**puts (10 & 11) ***MUST*** be left open. You can use them as spares when needed.
In regards to the sensor, use your imagination. Stainless steel would be preferred but try other materials too. Depending on what type of fluid you use it for you naturally would choose your type of sensor which would resist corrosion for that particular fluid. I often use chromed bicycle spokes with very good success. The 'Sensor' works via the capacitive method.

The "RESET" switch in the circuit is optional. The relay can be replaced with anything you like; buzzer, lamps, other relays, etc.

Below are a couple valuable comments from *Dave Burton* of **Burton Systems Software:**

Thanks, Tony, for publishing your Fluid-Level Sensor design. I'm using it to detect sewer line plugs (water backing up toward the access port), and hot water heater / clothes washer / AC condensate pump overflows/leaks (water on the basement floor). It works very well.

Also, it says "the 'Sensor' works via the capacitive method." But I don't think that is correct. It would be more accurate to say that, for detecting fluids that are perfect insulators, the circuit CAN be made to work by detecting an increase in capacitance when the fluid replaces air in an air gap in the sensor.

But for the more common case of fluids that are not perfect insulators (like water on my basement floor), the circuit works by detecting resistive conduction through the fluid. It is lowered resistance that is detected, not increased capacitance.

To detect insulating fluids via the capacitive method would require good sized plates separated by an air gap, and careful adjustment of the sensitivity via R2 to distinguish between the possibly small change in capacitance due to the presence of the fluid. The difference might be small because there is only a fairly small differences between the dielectric constants of air and some common fluids. E.g., air has a dielectric constant of 1, and typical oils have dielectric constants of 2 to 5. Note, too, that desire to get a measurably large amount of capacitance leads us to desire that the gap between the plates be small (because the capacitance is inversely proportional to the distance between the plates), but the gap cannot be too small, lest capillary action hold fluid between the plates even after the fluid level has dropped below our sensor.

But to detect dirty water or tap water you can use almost anything: even a pair of bare wire ends several cm apart works just fine.

Also, one handy feature not mentioned in the article is that several resistive "sensors" can be hooked up together (in parallel) to detect fluid at any of several different locations.

(Tony's note: Thanks Dave for your comments, much appreciated!)

Back to Circuits Menu page

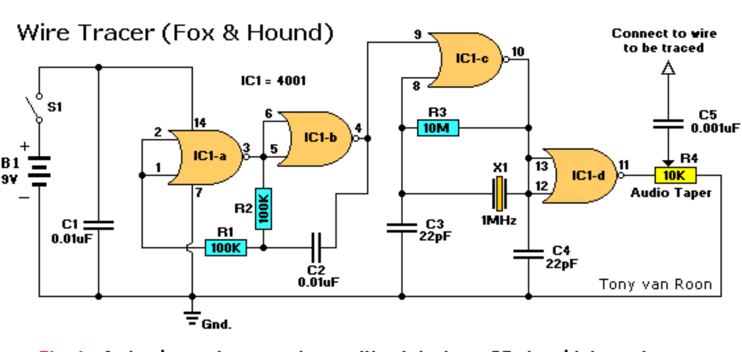

Fig. 1. A simple carrier-wave transmitter injects an RF signal into a wire; an AM radio can pick up the signal as a low-pitched "growl".

The "Fox" and "Hound," made by Triplett Corporation (http://www.triplett.com), are a transmitter and receiver for tracing telephone(and others) wires through walls. You connect the transmitter to the wire, and the receiver helps you trace the wire from several inches distance away. Triplett doesn't say much about how they work, but th Fox and Hound apparently use inductive coupling of a low-frequency signal, maybe around 50 to 100KHz.

Fig. 1. shows a cheaper transmitter that uses an AM transistor radio as the detector. It uses a type 4001 (CD4001B) cmos integrated circuit to generate a pulsing signal a 1MHz (100KHz), which is heard as a growling sound in the radio. Connect the transmitter to the wire to be traced, tune the signal in, and set R4 potentiometer to give the weakest signal that does the job. At maximum setting you can probably pick it up several feet away; lower settings will enable you to locate wires within an inch or two. Note that you are using the AM loop antenna inside the ratio, not the FM whip, whip should be fully retracted, or if it is a screw-in type, unscrew it.

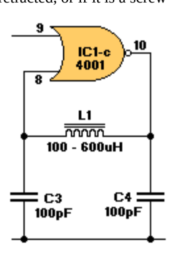

As shown, the circuit transmits on 1000KHz and is controlled by a 1-MHz microprocessor crystal. **Fig. 2.** shows how to use an LC oscillator to get other frequencies or to save having to order a crystal. Although build with a CMOS gate, this is simply a Colpitts oscillator. Note that the two capacitors are effectively in series, so only half of their capacitance is present in the tuned circuit.

Now for the bad news. As you may have discovered, this type of device probably will not detect a small break in a phone line. Radio waves that can go several inches through wood and plaster can also jump across a tiny gap in metal wire. Nonetheless, with care, you may be able to find the break by looking for a place where the signal strength drops dramatically.
Another approach would be to use a much lower-frequency signal, such as 5 KHz from an audio-signal generator, and pick it up inductively with a microphone-level audio amplifier. Try using a coil from a relay as the detector, in place of a microphone. Low-frequency signals are harder to pick up but also less able to jump across breaks in the wiring.

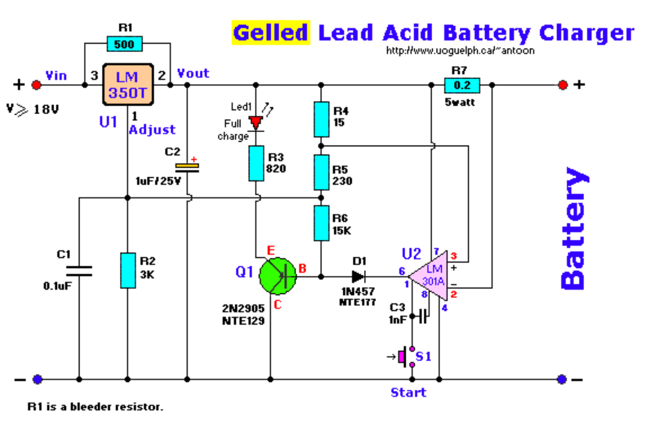

Parts List:

All resistors are carbon, 1/4 watt, 5% tolerance, unless otherwise indicated.

```
R1 = 500 ohm              C1 = 0.1µF (100nF), ceramic      U1 = LM350T
R2 = 3K                   C2 = 1µF/25 volt                 U2 = LM301A
R3 = 820 ohm              C3 = 1000pF (1nF), ceramic       S1 = Pushbutton switch (normally-open)
R4 = 15 ohm               D1 = 1N457 (or equiv.)
R5 = 230 ohm            Led1 = Red, 5mm, ultra-bright
R6 = 15K                  T1 = 2N2905
R7 = 0.2 ohm, 5W, WW
```

This high-performance circuit first quickly starts (and holds) the charge at 2 amp, but as the voltage rises the current will consequently decrease. When the current falls below 150mA, the charger automatically switches to a lower 'Float' voltage to prevent overcharging.
At the point that a full charge is reached, T1 will bias and the LED will light.
The LM301A is a 8-pin OpAmp. Transistor T1 is a PNP, Silicon, AF-Out type with a TO-39 metal case and can be substituted for a NTE or ECG129. Diode D1, a Si, GP Det. type, can be substituted with a NTE177 or ECG177. The LM350 (U1) needs to be cooled.
The input voltage should equal or about 18volts.

R1's function is to bleed some of the input voltage to the output and vice-versa. A 1N4002 or similar diode can be used also.
R2 & R5 are actually metal-film type resistors but carbon is okay to use. To get the 3K for R2 use two 1K5 (1500 ohm) resistors in series. For R5 use two 470 ohm resistors in parallel. Or whatever combination to get to these values. For R1, 500 ohm, you can use two 1K in parallel or 470 + 33 ohms in series.
R7, the 0.2 ohm resistor, is a 5 watt wire-wound type. Do **not** use the standard carbon type.

S1 is a subminiature pushbutton switch, normally open. I received a couple emails in regards to this switch. I thought the diagram was pretty clear. It shows an 'open' switch with the arrow indicating a 'momentary' connection when pushed. Nothing out of the ordinary here folks and a standard symbol for electronics...

When the start switch is pushed, the output of the charger goes to 14.5 V. As the batttery approaches full charge, the charging current decreases and the output voltage is reduced form 14.5V to about 12.5V, terminating the charging process. Transistor T1 then lights the led as a visual indication of a full charge.

Note: (5-05-2001) C4 was added for improved stability. Not really necessary.

NOTE: For Gelled, lead-acid type 12volt batteries only!

Back to Circuits Page

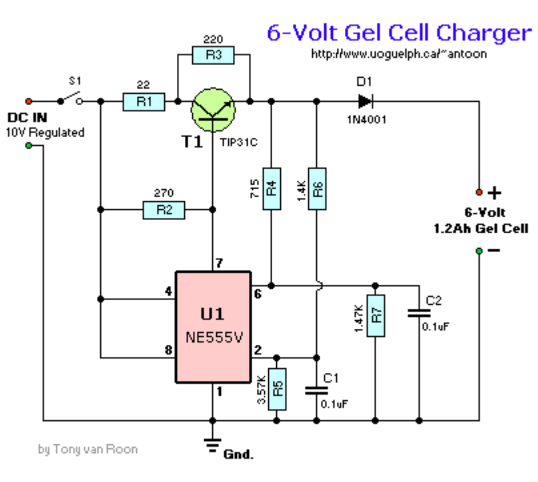

Parts List:

Resistors are carbon, 1/4 watt, 5% tolerance, unless otherwise indicated.

```
 R1 = 22 ohm, 1W           C1 =  0.1µF, ceramic
 R2 = 270 ohm              C2 =  0.1µF, ceramic
 R3 = 220 ohm              D1 = 1N4001
*R4 = 715 ohm, 1%          T1 = TIP31A, B, C (or equivalent)
*R5 = 3.57K, 1%            U1 = NE555V (or equivalent)
*R6 = 1.40K, 1%            S1 = Toggle switch, ON-OFF
*R7 = 1.47K, 1%
```

Description:

This circuit needs a regulated 10V-DC front end capable of supplying 2 Amps. Starts the charge cycle at 240mA and at full charge switches automatically to a float condition (trickle charge) of 12mA.
The capacitors are the ceramic 50V (or better) type. Switching transistor T1 is an NPN, Si-Power Output/SW, with a TO-220 case and can be replaced with a suitable substitute like the NTE291, ECG291, etc.
Timer/Oscillator U1 is a 8-pin NE555V and can be replaced with a NTE955M or ECG955M.
Resistors R4, R5, R6, and R7 are 1% metal film types. They may not be available at your local Radio Shack/Tandy store and have to be ordered in. Try Electro-Sonic or Newark Electronics supply stores.

NOTE: For 6-volt, 1.2Ah Gel Cell type batteries only!

Back to Circuits Page

Headlight Alarm

By Tony van Roon

"Never forget to turn off your head light ever again! Most newer cars already have this feature built-in but there are still lots of cars out there without it. This simple circuit is cheap and can be built for about $5 bucks!"

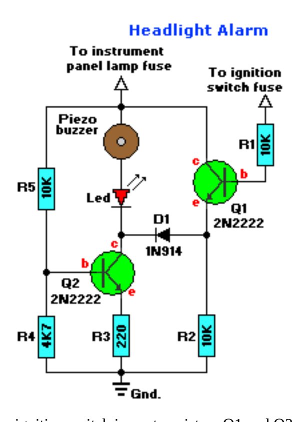

It's 5:00pm and you've just finished a long day at the office. You climb into your car, turn the ignition switch on, and nothing happens. That's when you suddenly realize the problem; you left your headlights on this morning. Unfortunately, the realization has come about eight hours too late and now your battery is dead.

The preceding incident has probably happened to your at least once; in my case it has happened more often than I care to remember. Or at least it used to. Now, I have installed the simple circuit shown in Fig. 1 in my car. Of course, the circuit is a headlight alarm. It has saved me from embarrassment and aggravation on several occasions.

The Circuit: While many cars are equipped with a headlight alarm, many more, unfortunately are not. For those cars this little circuit offers a low-cost way to add that valuable feature. Let's see how it works.

The base of Q1 is connected to the car's ignition circuit; the easiest point to make that connection is at the ignition switch via the fuse panel. Also, one side of the piezoelectric buzzer is connected to the instrument-panel light fuse; remember that when the headlights or parking lights are on, the instrument panel is lit too. When the headlights are off, no current reaches the buzzer and therefore nothing happens. What happens when the headlights are on depends on the state of the ignition switch. When the ignition switch is on, transistors Q1 and Q2 are biased on, effectively removing th buzzer and the LED from circuit. When the ignition switch is turned off but the headlights are on, transistor Q1 is turned off, but transistor Q2 continues to be biased on. The result is that the voltage across the piezoelectric buzzer and the LED is sufficient to cause the buzzer to sound loudly and the LED to light. Turning off the headlight switch will end the commotion quickly.

Construction: The circuit can be wired together on a piece of perf-board. The buzzer I used was a Radio Shack 273-065 PC-board mounting type, but almost any similar buzzer will do. Circuit parameters are not critical, so feel free to make appropriate substitutions from your junk box to further reduce the cost.

When your are finished, house the circuit in a small, plastic experimenter's box (in my case a plastic film container) and locate the unit on or under the dash where it will be out of the way and mount only the LED where it can be seen easily. One good place would be next to the headlight switch on the dash; that will provide more of a custom look.

Lantern Dimmer/Flasher

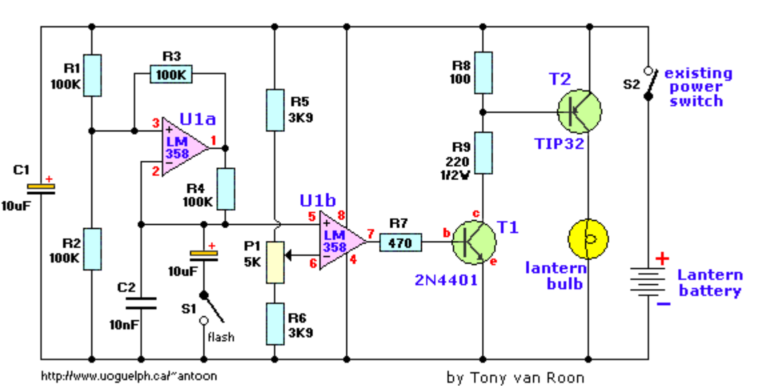

Parts List

```
R1 = 100K       C1,C3 = 10µF/16V
R2 = 100K          C2 = 0.01µF, ceramic
R3 = 100K          T1 = 2N4401
R4 = 100K          T2 = TIP32
R5 = 3K9           U1 = LM358
R6 = 3K9           L1 = Lantern Bulb
R7 = 470           S1 = On-Off Switch
R8 = 100
R9 = 220, 1/2 watt
P1 = 5K
```

Circuit Description:

The electronic lantern control circuit adds high-efficiency dimming and flashing to an existing battery-powered lantern or flashlight or to a custom design. For the car it makes a great lamp for changing a flat tire, back seat reading or emergency engine work. The flasher mode is useful for warning other drivers of your troubles and it may be adjusted to have a very short flash duration for long-term use as when the car must be left on the shoulder over night. When camping it is great as a low-power night light for the tent or the portable 'potty'--you may select only as much light as you need! The flasher mode is useful for finding a boat dock in the dark or even attracting fish. At home, the flasher is a great way to tell guests when they have found the right house or to "jazz up" battery powered holiday decorations. The circuit is intended for 6 or 12 volt lantern batteries but it should work well with supplies from 4.5 to 15 volts without any modifications to the circuit as shown above.

In dimmer mode (switch S1 open), the circuit send rapid variable-width pulses to the bulb to control the brightnes and in flasher mode (switch S1 closed) the pulse rate is about one per second. Very short flashes will give a greatly extended battery life. The TIP32 remains cool since it switches on and off instead of simply dropping the voltage like a power rheostat.

The components are not critical and substitutions are fine. Almost any general purpose op-amps or comparators will work in place of the LM358. The two transistors may be replaced by a power FET if desired simply by connecting the gate to pin 7 of the Op-Amp, the source to ground, and the drain to the bulb. The other end of the bulb connects to the positive terminal of the battery in this case. There is nothing particularly critical about the resistor and capacitor values and the experimentor may change them, if desired. For example, a 10K-pot may be substituted for the 5K by increasing the 3.9K resistors by 2 also (8.2K would be fine). the 100K's in the flash circuit may be a different value if the capacitors are also scaled (inversely--if the resistors are doubled, the 0.1 and 10µF are halved). Try experimenting with whatever you have at hand or combine values to get the desired value you want.

Construction is not critical - the entire circuit may be built on a piece of perf-board and wrapped with electrical tape. An old gas-mantle lantern coulb be converted over to battery power by placing a bulb socket in place of the mantle and building a battery compartment in the fuel tank.

Additional Notes

ALL resistors are 1/4 watt, 5% tolerance, unless otherwise posted.
P1 is the dimmer potentiometer. S1 is an additional switch to activate the 'Flashing' mode. R9 has to be a half-watt type. T1 is a NPN audio amp transistor and can be substituted with a2N3904, PN100, NTE123AP, the BC547, Elector's (Elektuur) TUN, etc. T2 is a PNP power amp and can be substituted with a NTE197. Try others, they also may work.

Back to Circuits Page

2-Transistor Led Flasher

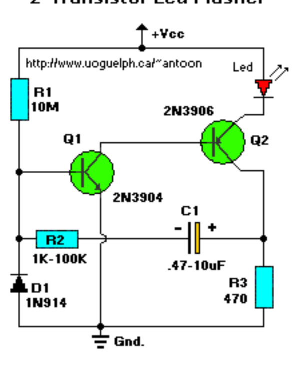

Parts List

R1 = 10M, 5%
R2 = 1K - 100K, 5%
R3 = 470, 5%
C1 = 0.47µF - 10µF/25V
D1 = 1N914
Q1 = 2N3904
Q2 = 2N3906
Led = High Brightness Red LED

Volts	R1	R2	R3	C1	Approx. Flash Rate
12	10 Meg	22 K	470	0.47 uf	140 per minute
12	10 Meg	10 K	470	1.0 uF	60 per minute
9	6.8 Meg	1 K	390	6.8 uF	15 per minute
6	3.3 Meg	10 K	220	1.0 uF	80 per minute
3	1.5 Meg	10 K	51	1.0 uF	120 per minute
3	3.3 Meg	47 K	51	0.47 uF	140 per minute

This circuit will flash a bright or high-brightness red LED (5000+ mcd). Good for fake car alarm or other attention getting device. Component values are not critical, try anything else first from your junkbox.
Obviously, the 470 ohm resistor (R3) determines the LED's brightness and limits the current flow to about 20mA. 390 ohm can also be used as a save value. If you decide to go with a green or yellow led, which draw more current, you may want to replace the 470 ohm with an appropriate value. Flash rate is determined by R2 and C1 and is approximately three time constants (3*R2*C1). R1 provides bias to Q1 which should be low enough not to saturate Q2 with the capacitor disconnected. If the circuit does not oscillate, R1 may be too low or R2 too high. D1 allows for highter duty cycle operation and limits the feedback at the base of Q1 to -0.7 volts. D1 may be ommited for low supply power like 6 - 9V and low duy cycle operation.

Back to Circuits page

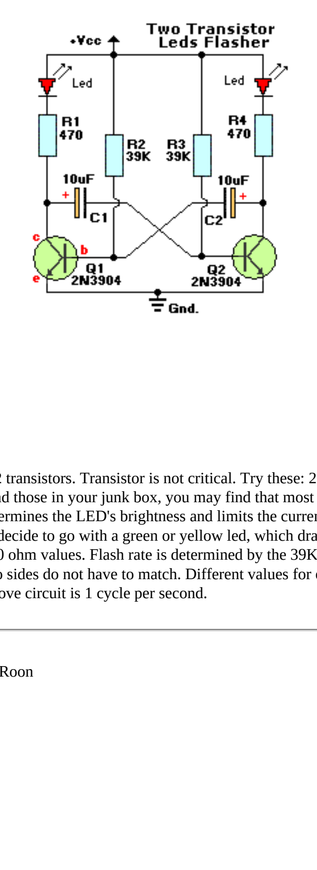

Parts List
R1,R4 = 470, 5%
R2,R3 = 39K, 5%
C1,C2 = 10µF/16V
Q1,Q2 = 2N3904
Led's = High Brightness, Red

Classic astable multivibrator using 2 transistors. Transistor is not critical. Try these: 2N4401, 2N2222, NTE123A, NTE123AP, NTE159, TUP/TUN and those in your junk box, you may find that most of them will work.
Obviously, the 470 ohm resistor determines the LED's brightness and limits the current flow to about 20mA. 390 ohm can also be used as a save value. If you decide to go with a green or yellow led, which draw more current, you may want to replace the 470 ohm with 270 or 330 ohm values. Flash rate is determined by the 39K resistors and the 10µF capacitors (determines the **'ON'** time). The two sides do not have to match. Different values for each side can give a nice effect for unique duty-cycles. Flashrate for above circuit is 1 cycle per second.

Back to Circuits page

Led Pilot Light

by Tony van Roon

LED's are funny things. They only work at Vdc within specific tolerances, and normally connected with a current limiting resistor to the powersource. Instead of a resistor, you can use a FET (Field Effect Transistor) such as the ECG312, NTE312 which are good for up to 30Vdc max. The MPF102 will also work just fine, just the max voltage is 25V. Other types will also work, just watch the maximum rated voltage versus your input voltage. They easily blow if the you go above the maximum specifications. Keep in mind that, although the circuit works as shown, it is not protected against voltage spikes. You can add that feature yourself if needed. I actually strongly recommend it.

When the gate and the source are connected together, it behaves as a current regulator. In the circuit above the current is constant between 6 and 8 mA at 5 to 30Vdc. Because of the set current of around 6mA the older LED's will glow faintly at best. I'm talking about the led types from the 70's wich are still kicking around.
And another tip, try to get the results you want with a variable powersupply and start with about 5volts or so. It may save a couple types of J-Fets from early retirement... :-)

If a diode is added such as a 1N4148 or similar, it can be connected to a AC source of 5 to 20 V-AC (NTE312).

I found that the 3mm type led's work best and give the green leds preference.

Back to Circuits Menu

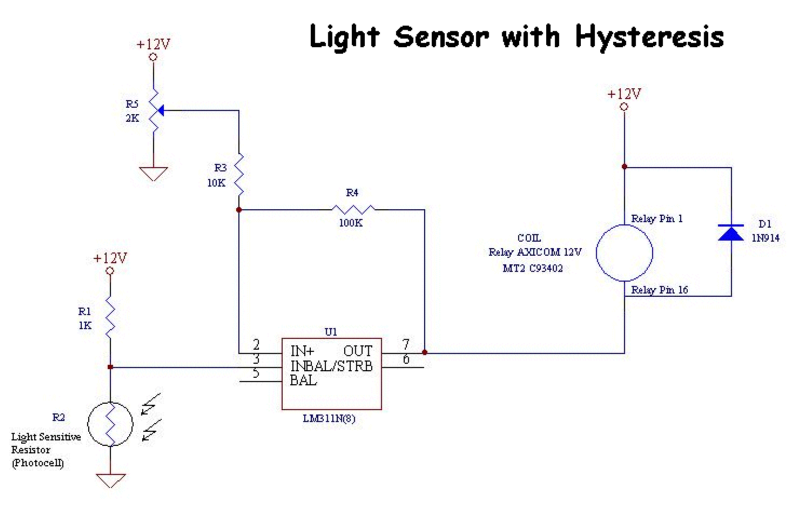

Posted with permission of Frank Rivard

It is quite a simple circuit but rather more effective than the one using the 741. It uses a simple comparator LM311 as the master piece. This comparator is powered from a +12V DC supply and does not require negative supply to work efficiently. The feedback given to the comparator provides some hysteresis and the potentiometer allows to adjust the sensitivity of the detector for darkness. I am quite sure you could inverse R1 and R2 positions to inverse the action of the detector but I haven't tried it!

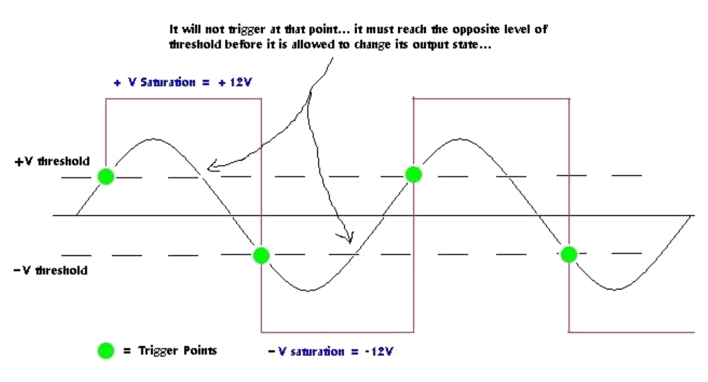

The resistance of the light sensitive resistor is a trial and error game but I have been using values around 300 ohms under visible light and 3k under darkness... but as I repeat, you must try several types of photocell before it works correctly and you have enough span to adjust it correctly. It all depends what you have in your "junk" box!

The magic thing about this light sensor is that it does not trigger on and off at the same level of darkness (hence the purpose of hysteresis) and it makes it good for everyday uses. It will trigger from one state to the other when it is dark enough but will not trigger back and forth several times when you are on the edge of darkness. It requires a higher level of light to trigger back to the previous state.

So, if you use it to control outdoor lightings for example, it will produce a single clean trigger from on to off ... It will turn off one at dawn and will turn back on only once in the morning when light will be strong enough to energize the comparator. This is quite good because it avoids the relay to trigger several times under high currents...

If you have questions or design improvement upon the above circuit, please contact Frank Rivard

Return to Circuits Page

Logic Probe with Pulse

http://www.uoguelph.ca/~antoon

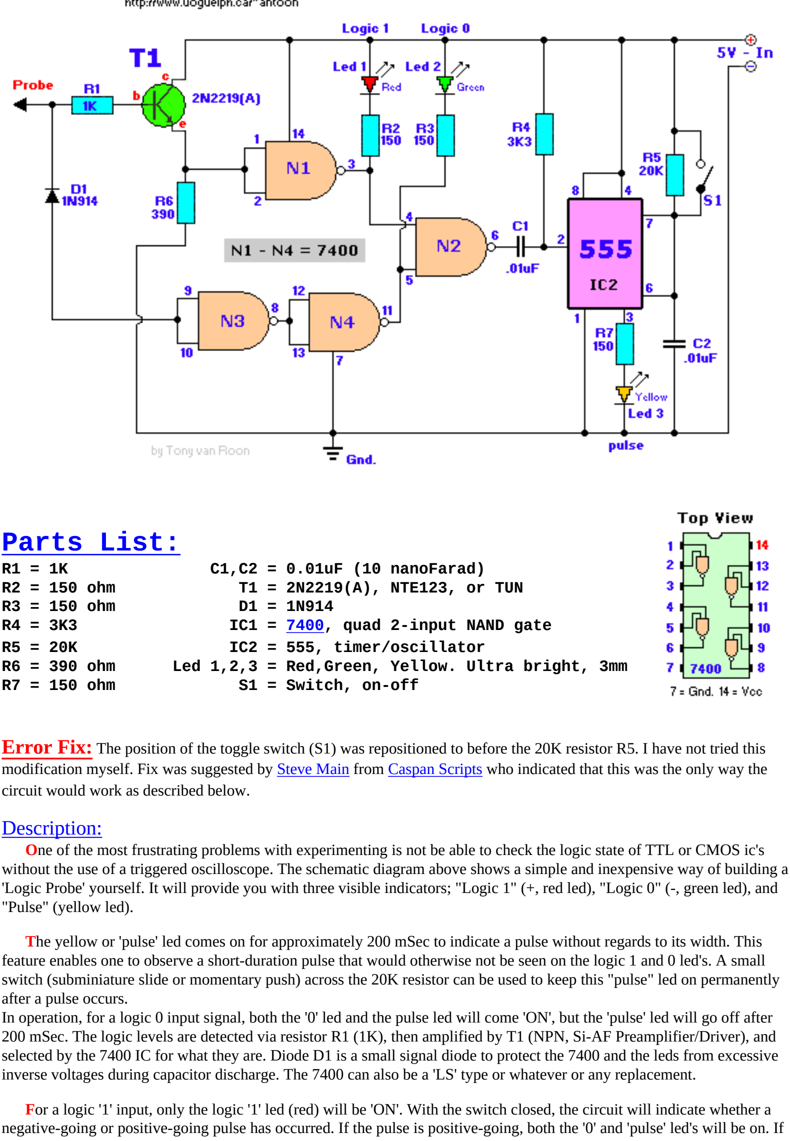

Parts List:

R1 = 1K	C1,C2 = 0.01uF (10 nanoFarad)
R2 = 150 ohm	T1 = 2N2219(A), NTE123, or TUN
R3 = 150 ohm	D1 = 1N914
R4 = 3K3	IC1 = 7400, quad 2-input NAND gate
R5 = 20K	IC2 = 555, timer/oscillator
R6 = 390 ohm	Led 1,2,3 = Red,Green, Yellow. Ultra bright, 3mm
R7 = 150 ohm	S1 = Switch, on-off

Error Fix: The position of the toggle switch (S1) was repositioned to before the 20K resistor R5. I have not tried this modification myself. Fix was suggested by Steve Main from Caspan Scripts who indicated that this was the only way the circuit would work as described below.

Description:

One of the most frustrating problems with experimenting is not be able to check the logic state of TTL or CMOS ic's without the use of a triggered oscilloscope. The schematic diagram above shows a simple and inexpensive way of building a 'Logic Probe' yourself. It will provide you with three visible indicators; "Logic 1" (+, red led), "Logic 0" (-, green led), and "Pulse" (yellow led).

The yellow or 'pulse' led comes on for approximately 200 mSec to indicate a pulse without regards to its width. This feature enables one to observe a short-duration pulse that would otherwise not be seen on the logic 1 and 0 led's. A small switch (subminiature slide or momentary push) across the 20K resistor can be used to keep this "pulse" led on permanently after a pulse occurs.
In operation, for a logic 0 input signal, both the '0' led and the pulse led will come 'ON', but the 'pulse' led will go off after 200 mSec. The logic levels are detected via resistor R1 (1K), then amplified by T1 (NPN, Si-AF Preamplifier/Driver), and selected by the 7400 IC for what they are. Diode D1 is a small signal diode to protect the 7400 and the leds from excessive inverse voltages during capacitor discharge. The 7400 can also be a 'LS' type or whatever or any replacement.

For a logic '1' input, only the logic '1' led (red) will be 'ON'. With the switch closed, the circuit will indicate whether a negative-going or positive-going pulse has occurred. If the pulse is positive-going, both the '0' and 'pulse' led's will be on. If the pulse is negative-going, the '1' and 'pulse' led's will be on.

I have build mine into a short, but thick, magic-black marker. The probe-tip is made of a piece of piano wire. Have fun building it and make it part of your trouble-shooting equipment. Mine has been in operation since 1987!

Back to Circuits page

http://www.uoguelph.ca/~antoon/circ/7400.gif

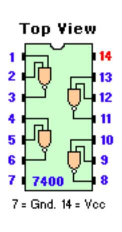

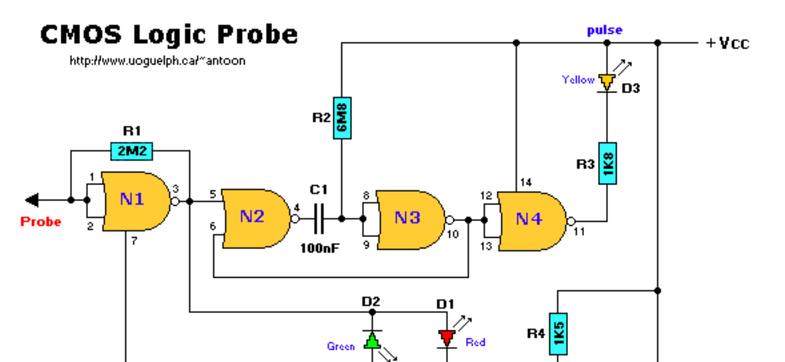

Parts List:

```
R1 = 2M2          C1,C2 = 0.1µF (100 nanoFarad)
R2 = 6M8          IC = MC4001 (CMOS)
R3 = 1K8          Leds = D1-Red, D2-Green, D3-Yellow, 3mm.
R4 = 1K5          (R2: 6.8M or two 3.3M)
R5 = 1K8
```

Description:

A logic probe is a device which is used when testing digital circuits, and it shows the logic state at the selected test point. In common with most designs this one can indicate four input states, as follows:
1. Input high (logic 1)
2. Input low (logic 0)
3. Input pulsing (pulse)
4. Input floating

This circuit uses the four 2 input NOR gates contained within the 4001 CMOS IC, and is primarily intended for testing cmos circuits. The probe derives its power from the supply of the circuit being tested. The first gate, N1, has its inputs tied together so that it operates as an inverter, and it is biased by R1 so that roughly half the supply potential appears at its output. A similar voltage appears at the juntion of R4 and R5, and so no significant voltage will be developed across D1 and D2 which are connected between this junction and gate 1's output pin 3. Thus under quiescent conditions, or if the probe is connected to a floating test point, neither D1 or D2 will light up. If the input is taken to a high logic point, gate 1 output will go low and switch on D1(red), giving a logic 'high' indication. If the input is taken to a low test point, gate 1's output pin 3 will go high and light D2(green) to indicate a logic 'low'.

A pulsed input will contains both logic states, causing both Led's D1 and D2 to switch on alternately. However, if the duty cycle of the input signal is very high this may result in one indicator lighting up very brightly while the other does not visibly glow at all . In order to give a more reliable indication of a pulsed input, gates N2 to N4 are connected as a buffered output monostable multivibrator. The purpose of this circuit is to produce an output pulse of predetermined length (about 1/2 a second in this case) whenever it receives a positive going input pulse.
The length of the input pulse has no significant effect on the output pulse. Led D3 is connected at the ouput of the monostable, and is switched on for about 1/2 a second whenever the monostable is triggered, regardless of how brief the triggering input pulse happens to be. Therefore, a pulsing input will be clearly visible by the yellow Led D3 switching on. The various outputs will be: Floating input -- all Leds off. Logic 0 input -- D2 (green) switched on (D3 briefly flashes on). Logic 1 input -- D1 switched on. Pulsing input -- D3(yellow) switched on or pulsing in the case of a low frequency input signal (one or both of the other indicators will switch on, showing if one input state pre-dominates.
The finished project can easily be housed in a magic marker felt pen or something. The probe-tip is made of a piece of piano wire, but a bronze finishing nail is a good choice too. Solder the probe wire to the nail or pianowire and you are all set. Have fun building it and make it part of your trouble-shooting equipment.

Back to Circuits page

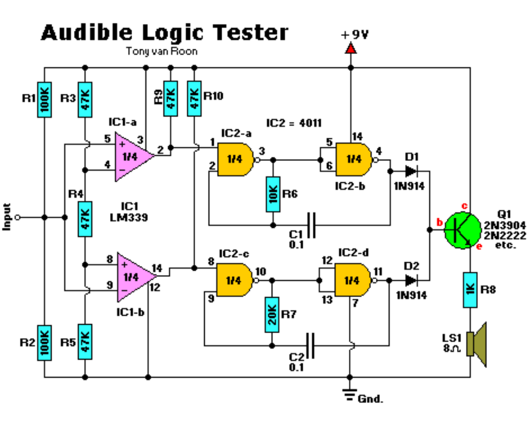

Parts List:

```
           R1,R2 = 100K                        Q3 = 2N3904, NPN-transistor (NTE123AP, 2N2222(A), etc.)
R3,R4,R5,R9,R10 = 47K                         IC1 = LM339, Quad op-amp
              R6 = 10K                         IC2 = CD4011, (or 14011) Quad 2-input Nand
              R7 = 20K                       D1,D2 = 1N914, signal diode
              R8 = 1K                          LS1 = Loudspeaker, 8-ohm
           C1,C2 = 0.1µF, ceramic
```

A logic tester with an audible indicator can be handy when troubleshooting or testing a crowded circuit board. It allows you to keep your eyes on the circuit, rather than on a LED on the tester. The project described in this article is just such a tester. It provides an audible indication of the logic level of the signal presented to its input.

Power for the circuit can be a 9V Alkaline battery, or any other power source from 4.5 to 15V.

D1/D2 can be also a regular 1N4148 diode but I have not tried that.

A logic 'high' is indicated by a high tone, a logic 'low' by a low tone, and oscillation is indicated by an alternating tone.

The input is high impedance, so it will not load down the circuit under test. It can be used to troubleshoot both TTL or CMOS logic.

The choice for Q1 is not critical. It is a NPN, general purpose type. Almost anything will do: 2N4401, 2N2222, BC548, TUN, ECG123AP, etc. Origianally the circuit called for 50K resistors for R3, R4, and R5, but 47K or 51K will do fine. It is just a voltage divider and either value will work.
For R7 use two 10K resistors in series if you can't find the 20K value.

Back to Circuits page

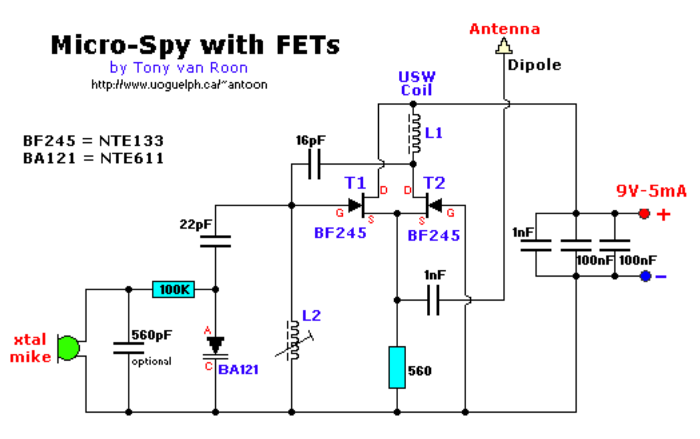

o T1 & T2 are BF245 N-channel High-frequency FET's and can be replaced with a NTE133/ECG133. The ECG312 could likely be used also. The varactor diode BA121 can be replaced with a ECG/NTE611. USW stands for 'Ultra-Short-Wave'.
o L1/L2 = 7 turns of 0.5mm Silverwire on a 5mm adjustable Ferrit-core.
o This very stable oscillator has a frequency of 400MHz and could preferred be a lot higher. At 5V the frequency is around 137MHz.
o Voltage supply is not critical. The oscillator starts working at 3V, the upper limit is given by threshold of the BF245 and is 30V. At 12V sinks at about 5mA.
o Feedback via 16pF capacitor. No interference from (dipole) antenna on resonance-loop.
o Distance is a minimum of 300 meters (900feet)!

Back to Circuits page

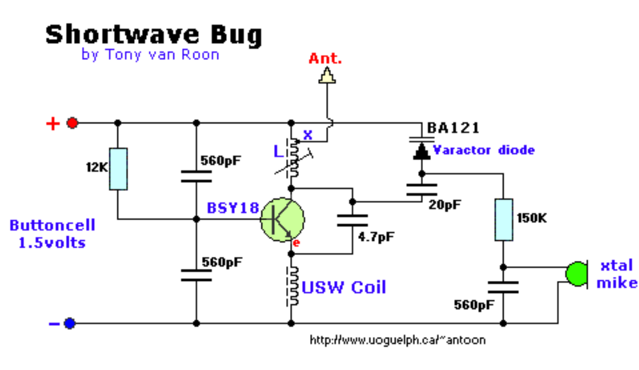

o BSY18 can be replaced with ECG123AP. BA121 can be replaced with ECG/NTE611 (10pF@4v). USW means 'Ultra-Short-Wave'.
o L1 = 7 turns of 0.8mm Silverwire(round) on a 5mm round adjustable Ferrit-core. Position 'X' = 0.5 ... 1 turn.
o This very stable oscillator has a frequency of approximately 100 Megaherz.
o Frequency determend by the Variac BA121 and 20pF capacitor. Feedback is thru 4.7pF capacitor.
o USW coil prevents HF signals (feedback) flow to ground.
o DC biased with the 12K resistor.
o Distance is from 100 to about 200 meters. Not bad for a little circuit like this!

Please note: This circuit is not open for discussion; do with it as you please (but no copyright violations). I will answer no emails in regards to this circuit.

Back to Circuits page

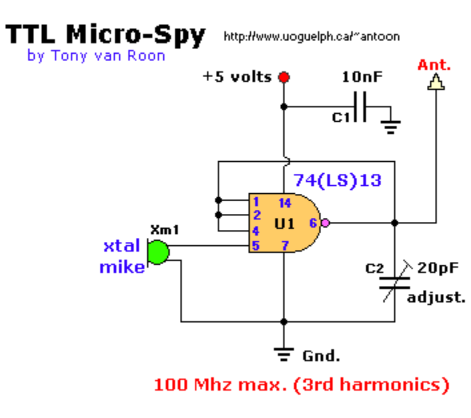

Parts List:

```
 C1 = 10nF, ceramic. Preferable NPO type
 C2 = 20pF adjustable trimmer cap
IC1 = 74LS13
 Xm = Crystal Mike (see text)
Ant = Almost anything will work (see text)
```

Couple Notes:

This circuit is old (70's) but since the 74LS13 is from the regular 74xx series and easy to obtain, I decided to keep the circuit in place until components are no longer available.

Not much to tell here. Performance is based on the 74LS13, a 'Dual 4-input Positive-Nand Schmitt Trigger'. This circuit was experimental and so has no real purpose other than tinkering. But with only 4 parts, it works. Working on the 3rd harmonics (100MHz) and with the parts shown, it sends anything it picks up to a regular radio. It may take a bit of experimentation to find the right frequency on your radio. I used an old mechanical alarm clock (with those large bells) and put the microphone close to it. That allowed me to find the "tick-tack" signal on my radio at my leisure. The adjustable trimmer cap (C2) will fine-tune performance and sensitivity a bit by balancing the output signal to ground. Sound is picked up by the mike and fed to pin 5 which acts as a pre-amp stage. The other 3 inputs are configured to send out the amplified signal.

The crystal mike is actually one of those 'oldie' large clumsy pink ear pieces which where popular in the 70's. They are still available at Tandy/RadioShack or your local electronics parts shop. To use as a microphone, unscrew the plastic earpiece.

As you probably already noticed the power, and consequently the transmitting distance, is small. I believe if I remember well at the most 10 to 30 feet or so but depends on the antenna and input voltage. I used a piece of thin, 12" piano wire. But use whatever performs best. Regular wire can also be used.
Voltage to the circuit must *not* exceed 7 volts for the 'LS' type. However, for the regular 7413 model that is only 5.5 volts. C1 is decoupling any posible little spikes on the power rail.

Back to Circuits page

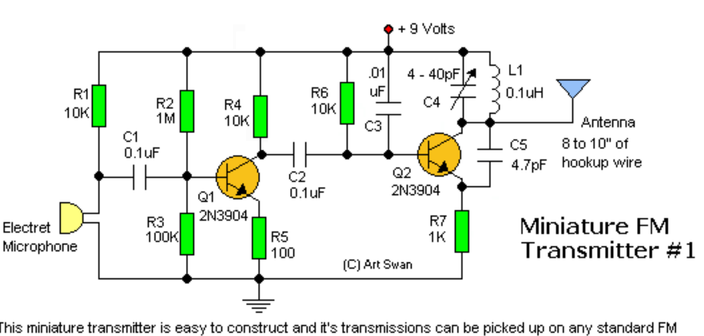

This miniature transmitter is easy to construct and it's transmissions can be picked up on any standard FM receiver. It has a range of up to 1/4 of a mile or more. It is great for room monitoring, baby listening, nature research, etc. L1 is 8 to 10 turns of 22 gauge hookup wire close wound around a non-conductive 1/4 inch diameter form, such as a pencil. C4 is a small, screw-adjustable, trimmer capacitor. Set your FM receiver for a clear, blank space in the lower end of the band. Then, with a non-conductive tool, adjust this capacitor for the clearest reception. A little experimenting and patience may be in order. Most of the parts values are not critical, so you can try adjusting them to see what happens.

Additional Notes

The default for the capacitors type is ceramic, preferably the npo 1% (low noise) type or equivalent. But basically nothing critical here. Use any capacitor you have laying around, but ***NO*** electrolytic or tantalum caps. Only if you intend to use this circuit outside the home you may want to select more temperature stable capacitors.

To find the signal on your receiver, make sure there is a signal coming into the microphone, otherwise the circuit won't work. I use an old mechanical alarm clock (you know, with those two large bells on it). I put this clock by the microphone which picks up the loud tick-tock. I'm sure you get the idea... Or you can just lightly tap the microphone while searching for the location of the signal on your receiver.

Back to Circuits page

Miniature FM Transmitter #2

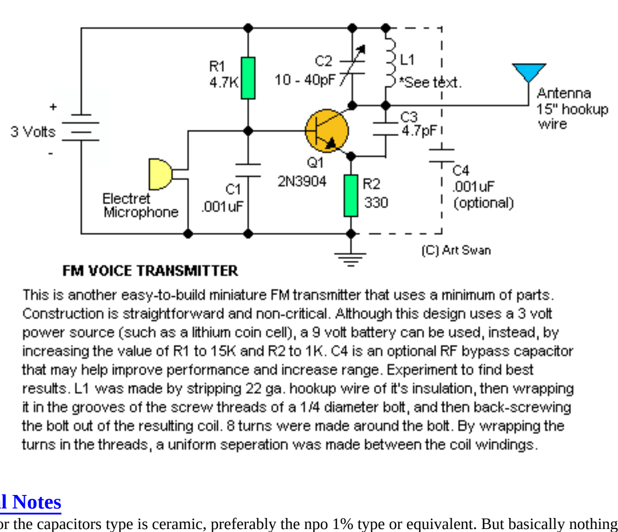

FM VOICE TRANSMITTER

This is another easy-to-build miniature FM transmitter that uses a minimum of parts. Construction is straightforward and non-critical. Although this design uses a 3 volt power source (such as a lithium coin cell), a 9 volt battery can be used, instead, by increasing the value of R1 to 15K and R2 to 1K. C4 is an optional RF bypass capacitor that may help improve performance and increase range. Experiment to find best results. L1 was made by stripping 22 ga. hookup wire of it's insulation, then wrapping it in the grooves of the screw threads of a 1/4 diameter bolt, and then back-screwing the bolt out of the resulting coil. 8 turns were made around the bolt. By wrapping the turns in the threads, a uniform seperation was made between the coil windings.

Additional Notes

The default for the capacitors type is ceramic, preferably the npo 1% type or equivalent. But basically nothing critical here. Use any capacitor you have laying arround, but **NO** electrolytic or tantalum caps. Only if you intend to use this circuit outside the home you may want to select more temperature stable capacitors.

To find the signal on your receiver, make sure there is a signal coming into the microphone, otherwise the circuit won't work. I use an old mechanical alarm clock (you know, with those two large bells on it). I put this clock by the microphone which picks up the loud tick-tock. I'm sure you get the idea... Or you can just lightly tap the microphone while searching for the location of the signal on your receiver.

Back to Circuits page

Sensitive FM Transmitter

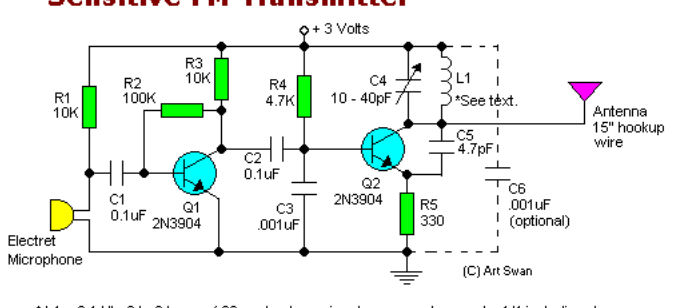

* L1 = 0.1 Uh, 6 to 8 turns of 22 ga. hookup wire close wound around a 1/4 inch diameter non-conductive core such as a pencil.

Additional Notes

The default for the capacitors type is ceramic, preferably the npo 1% type or equivalent. But basically nothing critical here. Use any capacitor you have laying around, but **NO** electrolytic or tantalum caps. Only if you intend to use this circuit outside the home you may want to select more temperature stable capacitors.

To find the signal on your receiver, make sure there is a signal coming into the microphone, otherwise the circuit won't work. I use an old mechanical alarm clock (you know, with those two large bells on it). I put this clock by the microphone which picks up the loud tick-tock. I'm sure you get the idea... Or you can just lightly tap the microphone while searching for the location of the signal on your receiver.

Back to Circuits page

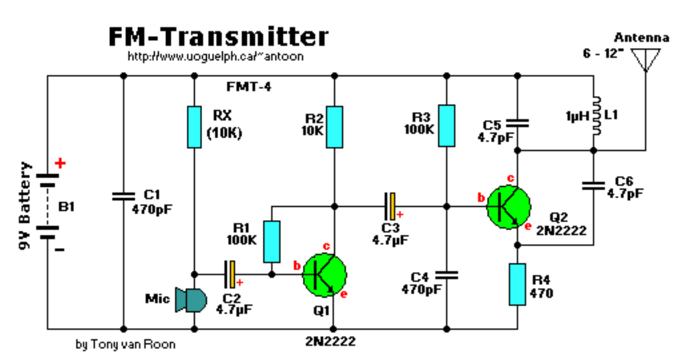

Parts List:

```
R1,R3 = 100K
   R2 = 10K
   R4 = 470 ohm
C1,C4 = 470pF
C2,C3 = 4.7µF, 16V, electrolytic
C5,C6 = 4.7pF
   C7 = 4-40pF trimmer cap (optional, see text)
   L1 = 1µH
Q1,Q2 = 2N2222, NPN transistor
  Mic = Electret Microphone
   B1 = 9 Volt, Alkaline battery
```

Notes:

Nothing critical here. To get a bit of tuning out of the coil you could put a 4-40pF trimmer capacitor (optional) parallel over the 1 µH coil, L1.
C1/C4 and C5/C6 are ceramic capacitors, preferably NPO (low noise) types. C2/C3 are electrolytic or can be tantalum types.
The antenna is nothing more than a piece of 12" wire or a piece of piano wire from 6" to 12".

To find the signal on your receiver, make sure there is a signal coming into the microphone, otherwise the circuit won't work. I use an old mechanical alarm clock (you know, with those two large bells on it). I put this clock by the microphone which picks up the loud tick-tock. I'm sure you get the idea... Or you can just lightly tap the microphone while searching for the location of the signal on your receiver.

Back to Circuits page

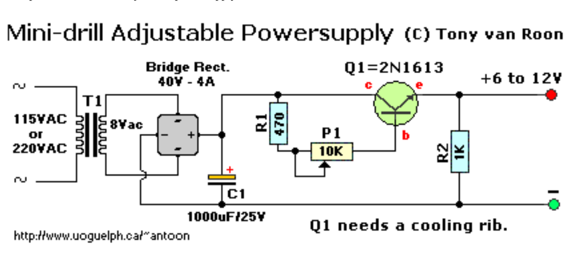

Parts List:

```
 T1 = 115/8 VAC transformer. Center Tap not needed.
 Q1 = 2N1613, NTE128, or substitute. (TO-39 case) On coolrib!
BR1 = 40V, 4A.  (Check max current of your mini-drill and add 2A)
 R1 = 470 ohm, 5%
 R2 = 1K, 5%
 P1 = potentiometer, 10K
 C1 = 1000uF, 25V
```

Notes:

C1 filters the noise and spikes off the ac. If you find the circuit output too noisy add another electrolytic capacitor over the output terminals. Value can be between 10 and 100uF/25V. The output voltage is variable with the 10K-potentiometer.

Back to Circuits page

Basic Missing Pulse Detector

by Tony van Roon -- http://www.uoguelph.ca/~antoon

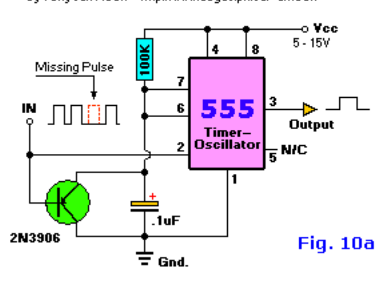

Fig. 10a

This circuit is a one-shot that is continually retriggered by incoming pulses. A missing pulse that prevents retriggering before a timing cycle is complete, causes pin 3 to go low until a new input pulse arrives. R1 & C1 control the response time. Use in alarms, continuity testers, beacons, R/C, etc.

Back to Circuits page

Morse Code Practice Oscillator

by Tony van Roon

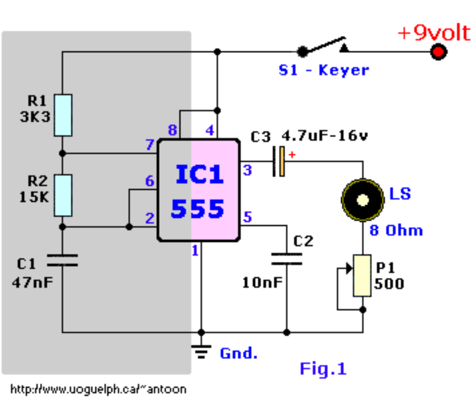

Fig.1

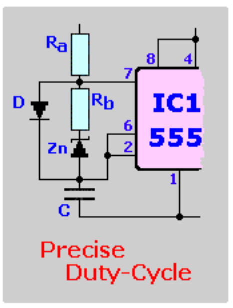

Fig.2

by Tony van Roon

Parts List

```
R1 = 3K3              IC1 = 555 Timer IC
R2 = 15K               S1 = Morse Keyer
P1 = 500 ohm
C1 = 0.047uf (47nF)
C2 = 0.01uF (10nF)
C3 = 4.7uF/16v
```

Additional Notes

The speaker (LS) can be any 8-ohm type up to 2-watts. C1 and C2 are ceramic capacitors. C3 is an electrolytic type.
IC1 is a CMOS MC1455P or equivalent. The cmos type consumes a lot less current when used with the 9-volt battery, but if you don't want to spent the money then the LM555, NE555, etc. are fine too and are pin-for-pin compatible with each other.
And obviously, S1 is your Morse-keyer. To get a more precise duty-cycle replace the components within the shaded gray area from Fig. 1 with the ones in Fig. 2. The diode can be 1N4148 or equivalent. The zenerdiode is between 5.2 and 5.8 volt. Ra and Rb are experimental to suit your personal taste. C is about the same.

Back to Circuits page

Morse Code Keyer (2)

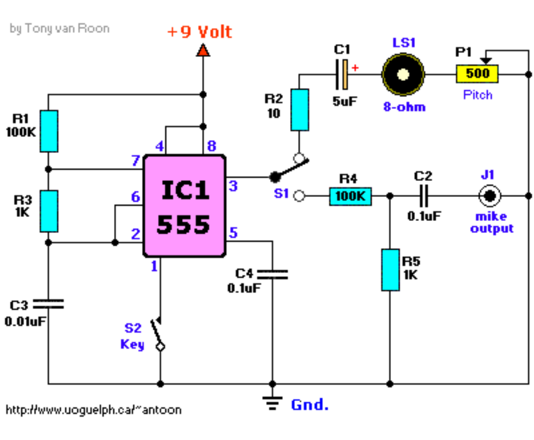

Parts List:

```
R1,R4 = 100K           IC1 = LM555
   R2 = 10 ohm          S1 = 3-pole, switch toggle, on-on
R3,R5 = 1K              S2 = Morse keyer
   P1 = 500 ohm         J1 = Jack, mike-output
   C1 = 5uF/16V        LS1 = Loudspeaker, 8-ohm, up to 2 watts
C2,C4 = 0.1 uF       Batt1 = 9-Volt Alkaline battery
   C3 = 0.01uF
```

Description:

The speaker (LS1) can be any 8-ohm type up to 2-watts. Supply voltage for this circuit is up to 15 volts, but 12V is more desirable if you choose to go with an adapter. If possible, try to use a mylar or polyester kind of capacitor for C2.
IC1 is a CMOS MC1455P or equivalent, Timer/Oscillator. This type of cmos IC consumes a lot less current when used with the 9-volt battery, but if you don't want to spent the money then the LM555, NE555, etc. are fine too and are pin-for-pin compatible with each other. The timing circuit is formed by R1, R3, and C3. Resistors R4 & R5 are a voltage divider to reduce the microphone output to a safe level. Potentiometer P1 can be used to control the 'Pitch'. Capacitor C5 is used as a bypass capacitor to clean up unwanted noise. C1 is specified as a 5uF electrolytic but a standard 4.7uF will work fine too.
S2 is your Morse-key or Paddle. S1 switches between your speaker and the microphone output jack (J1), which you can hookup to your stereo, amplifier, or cassette player. Match J1 with the jack you hook it up to.

Back to Circuits page

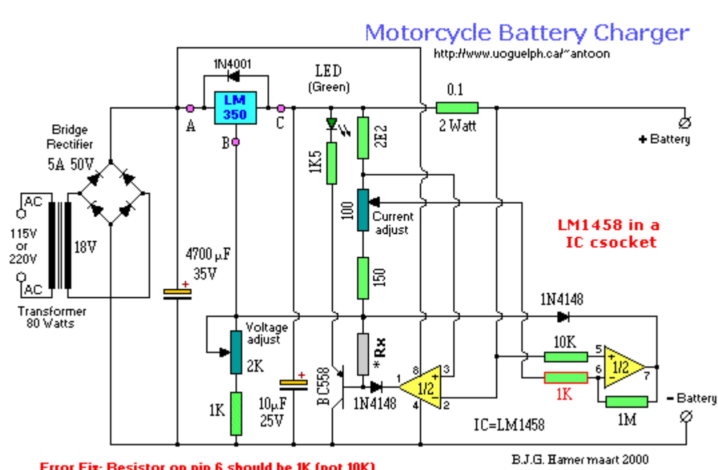

Published & Translated with permission of Jan Hamer, The Netherlands.

This 3A charger was originally designed to work with small batteries like those used in motorcycles. In principle it can be used to charge car batteries also but will take a lot longer.
The charger below charges a battery with a constant current to 14.1 volt. When this level is reached, the current charge drops automatically to a safer level (13.6V) and keeps charging at this slower rate untill the LED lights up indicating a fully charged battery. This project looks very much alike with the Gel cell II charger elsewhere posted in the 'Circuits' section. The difference is the IC, namely a LM1458 instead of a LM301A. Nice job Jan!

Description:

The LM350 is an adjustable voltage regulator and keeps the voltage between points C and B at 1.25 Volt. By adding a 1K resistor between point B and gnd (-) you can, as it were, lift up the output voltage. To accurately control the output voltage we add to this resistor, in series, a 2K adjustable 10-turn potentiometer. As soon as a battery is connected a current flow occurs, controlled by the right halve of the LM1458. The current through the 0.1 ohm resistor causes a voltage drop. This drop is compared with the voltage on the walker of 100-ohm pot. The moment this drop is greater than the one adjusted with the potmeter will cause the output of the LM1458 IC to go low and a small current starts to flow thru the diode and this in effect will reduce the current through the series resistors 1K + 2Kpot. The current is hereby stabilized.

The point between C and B is devided by three resistors; 2.2 ohm, 100 ohm pot, and the 150 ohm. 2.2 ohm and the 100 ohm potmeter are connected to the non-inverting input (+) of the LM1458 IC. The inverting input (-) is connected to the 0.1 ohm wire-wound resistor in series with the output. As long as the voltage drop, caused by the current-flow over this resistor is greater than the voltage drop over the 2.2 ohm resistor the output of the LM1458 will stay high and in turn block the BC558 transistor. But as soon as the charge current falls below a specific value the 1458 will go low and turn on this transistor which wich activate the LED. At the same time a small current will flow thru the 'Rx' resistor, which will cause that the output voltage of the charger switches to 13.6 Volt. This is a very safe output voltage, and does not cause overcharging to the battery and remains fully charged (trickle).
Rx should be an experimental value determined below; a mathematically calculation is possible but the exact value is determined by the tolerances of your specific components.

The voltage regulator LM350 has to dissipate a lot of energy so make sure to mount it on a large cooling fin. (e.i. 3.3°C/Watt) Diode 1N4001 over the input/output is necessary to prevent damage to the regulator in case the input voltage gets interrupted.
The LM350 can be substituted with a NTE970, and the BC558B with a NTE159 if you wish.
The adjustments for this charger are really simple and the only thing needed is digital multimeter. The LM1458 should **NOT** be in the socket while doing the first adjustment. When no battery is connected there is no current flow thru the 0.1 ohm resistor and therefore pulling the output low. So no IC yet in the socket. Do **NOT** connect a battery also. I know that is obvious to most of us, but some people... :-)
Okay, here we go:
1. Connect the multimeter (set for Volt DC) to the '+' and '-' battery output and adjust with the 2k trimpot the output voltage to 14.1 Volt.

2. Switch the power off. Discharge the capacitors (short them out with a piece of wire).

3. Now insert the LM1458 IC carefully (check no pins are bend underneath the chip).

4. Switch the power back on and make the resistor marked **Rx** such a value that the output voltage reads 13.6 volt exactly.

5. Swith the multimeter to 'Amp-dc'. Turn the 100-ohm trimpot all the way CCW. Connect the 'to-be-charged-battery' (e.i. NOT a fully charged battery) and turn back the trimpot untill the current load is 0.1 X the battery capacity (max 3A). Example: A 16Amp battery adjusting to 1.6A. If you don't have an Amp meter on your multimeter you can use the 2-volt setting on your meter and connect it over the 0.1 ohm resistor. The current is volt devided by 0.1, so for 3A the meter should read 0.3 volt.

That's it. To get the Rx value you could also use a trimpot until you get the 13.6volt and then read the ohm's value of the trimpot and replace with a resistor. In my opinion this resistor should be a metalfilm type at 1 or 2% tolerance.

+-+-+-+-+-+-+-+-+-+

The Technical bits:

For those of you interested in how the value of essential components was calculated, read on. You may be able to design your own charger for use with a different current or voltage (like 6-volt).
Calculations origin from the voltage between points C and B of the LM350 regulator. When a resistor is connected between these two points, enough current starts to flow that the voltage over this resistor measures 1.25 volt. In our case, the resistor total is 2.2 + 100 + 150 =252.2 ohm. Because we deal with very small currents the calculations are performed in milliamps and the calculations of resistance in Kilo-Ohms. Thus, the current thru this resistor is 1.25 / 0.2522 = 4.9564 mA. The same current also flows thru the 1K & 2K series resistors. We want the output voltage to be 14.1 volt, meaning the voltage drop over these series resistors must be 14.1 - 1.25 = 12.85 Volt.
The total resistance value thus must be 12.85 / 4.9564 = 2.5926 Ohms. To enable us to adjust it to this value, one of the resistors is chosen as a 10-turn trimpot (trimmer potentiometer). Together with the 1K in series (making it a total of 3K)we can adjust it to this correct value.
The **Rx** value is calculated this way; In this scenario we like to have a output voltage of 13.6 volt, in other words, the voltage on the connection point between the 1K/2Kpot should be 13.6 - 1.25 = 12.35 volt. This means that the current thru the 'voltage-divider' will be 12.35 / 2.5926 = 4.7635 mA and the leftover current should be 4.9564 - 4.7635 = 0.1929 mA thru Rx and also cause a voltage drop of 12.35 - 2.78 = 9.57 volt. Measuring this calculated value at the base of the BC558 transistor was 2.78 volt after the output of the LM1458 had become low. With the current of 0.1929 mA the result has become9.47 / 0.1929 = 49.611 Kilo-Ohm. A resistor of 47K would come close enough. Ofcourse you could also use a 50K trimpot to adjust the value even more accurately. The 1K5 (1500 Ohm) resistor in series with the LED is to limit the current thru the LED below 20 mA.

The only thing left is to calculate the value of the series resistor which determines the switch-over from charge to float condition. This occurs when the voltage drop over the 0.1 ohm (wire-wound) resistor at the positive leg smaller is than over the 2.2 ohm resistor. This value is 2.2 x 4.9564 = 10.9 mV. The resistance is 0.1 ohm, to get a voltage drop over this resistor of 10.9 mV is the current 10.9 x 0.1 = 109 mA. The second this charge current becomes lower then 109 mA, the LM1458 triggers over to the float condition.
The adjustment with the 100-ohm trimpot determines the maximum charge current. The voltage on the walker of this trimpot varies between 10.9 mV - 506.54 mV. The current is this way made adjustable between 0.1A - 5A, but we should not go that far because the LM350K can not handle anything over 3Amp. If we chose a trimpot with a value of 50 ohm, then on the other hand the 3A can not be obtained. So, careful adjustment is the remedy. Take your time!

With this information it is a simple task to calculate the dissipation values of the resistors. In other words, the product of the resistance multiplied with the current in square (I2xR).
The only resistor which gets it difficult is the 0.1 ohm, but then again, not by much 3 x 3 x 0.1 = 0.9 Watt.
Rest us to calculate the power. For that we have add a couple of voltages. We have the input voltage of 14.1, the voltage drop over the resistor, 0.1 x 3 = 0.33 volt, and 3 volt minimum over the LM1458 for proper function, total 17.43 volt. The transformer provides 18V (effective). With ideal rectifying this should total 18 x 1.41 = 25.38 volt. There are however losses via the diodes and bridge rectifier so there is about 23.88 volt remaining. Not much tolerance to play with, on the other hand, too much causes energy loss in the form of heat anyway.
The voltage drop over the buffer capacitor may not be lower than 17.43 volt, meaning, the ripple voltage may reach about 23.88 - 17.43 = 6.45 volt. By double-fase rectifying is the ripple voltage equal to I/(2xfxC) whereby I is the discharge current, f is the supply frequentie and C is capacity of the buffer capacitor in Farad. Exchanging places this would give C = 3/(2x50x6.45) = 0.004651 Farad, or 4651 uF. A standard value of 4700 uF with a minimum voltage value of about 35-40 Volt. The other capacitor is not very critical and is only there to kill small voltage spikes which could influence the operation of this charger otherwise.

The bridge rectifier gets a good workout also and it is therefore recommended to chose NOT a too light a unit. A 5A rectifier is often too small, better to take a 8 or 10A type. These are readily available everywhere.

Last but not least, the transformer. The buffer capacitor has approximately 25 volt accros. The current is 3A. This calculates to a power of 25 x 3 = 75 watt. This transformer has its own problems with powerloss (naturely occuring) and so a unit of about 80 watt is acceptable.
Never attempt to charge a 6 volt battery with a 12 volt charger; you are asking for trouble. Good luck all!

Please visit Jan Hamer's website in the Netherlands!

Return to Circuits Page

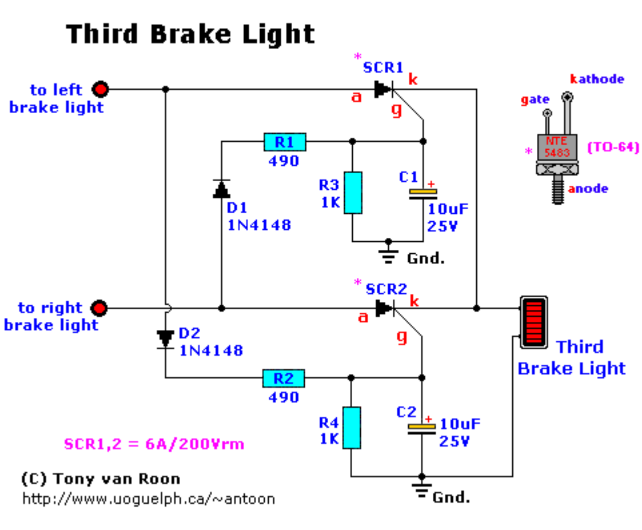

Additional Notes

What's so special about this circuit? Well, the first third-brake light I installed I had to pull a wire from the Third Brake Light all the way to the brake pedal switch and I thought it would be easier to pluck the signal of both brakelights via the trunk. Bench-test your circuit first and apply power to the circuit, with the brakelight connected, for at least a couple of minutes. If the two SCR's are getting hot (depending on the type of bulb in your 3rd brake light), mount coolribs on them. I used the NTE5483 which is a 8A, 200Vrm type.

Back to Circuits Page

Practical Intercom

© by Jan Hamer

"Baby-monitors, baby-phones, or simply intercoms are for sale everywhere in a variety of models and colors. Some work on AC, others wireless or just via a little wire. We all have our preferences. Just in case you're looking for a VERY reliable Intercom, the circuit below will suit your needs."

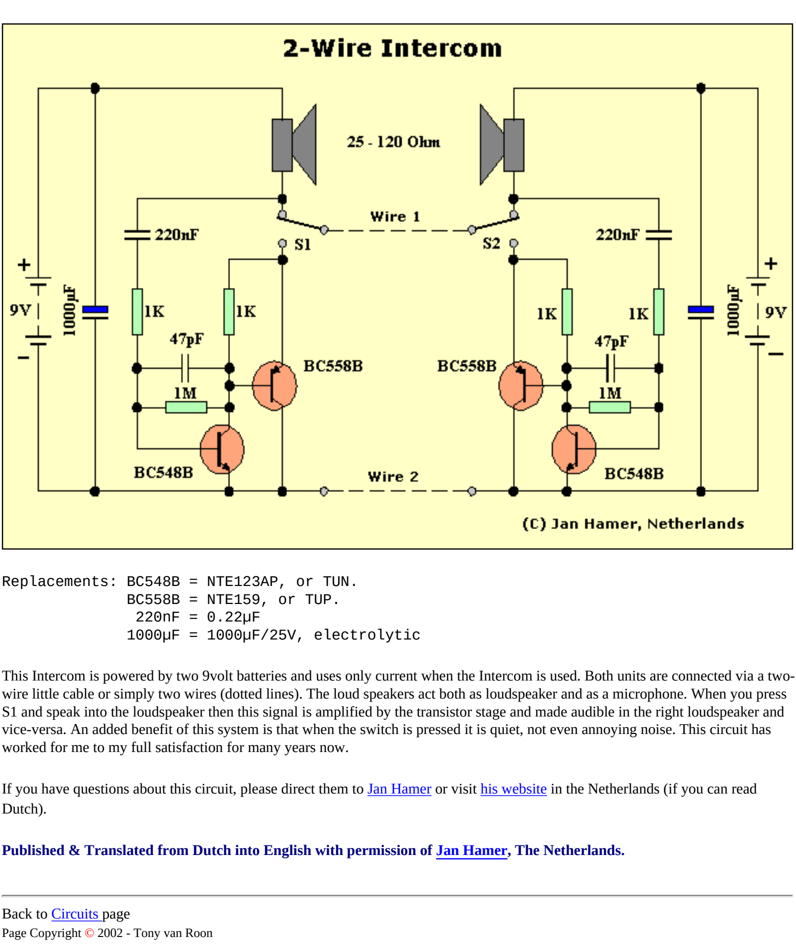

```
Replacements: BC548B = NTE123AP, or TUN.
              BC558B = NTE159, or TUP.
               220nF = 0.22µF
              1000µF = 1000µF/25V, electrolytic
```

This Intercom is powered by two 9volt batteries and uses only current when the Intercom is used. Both units are connected via a two-wire little cable or simply two wires (dotted lines). The loud speakers act both as loudspeaker and as a microphone. When you press S1 and speak into the loudspeaker then this signal is amplified by the transistor stage and made audible in the right loudspeaker and vice-versa. An added benefit of this system is that when the switch is pressed it is quiet, not even annoying noise. This circuit has worked for me to my full satisfaction for many years now.

If you have questions about this circuit, please direct them to Jan Hamer or visit his website in the Netherlands (if you can read Dutch).

Published & Translated from Dutch into English with permission of Jan Hamer, The Netherlands.

Back to Circuits page

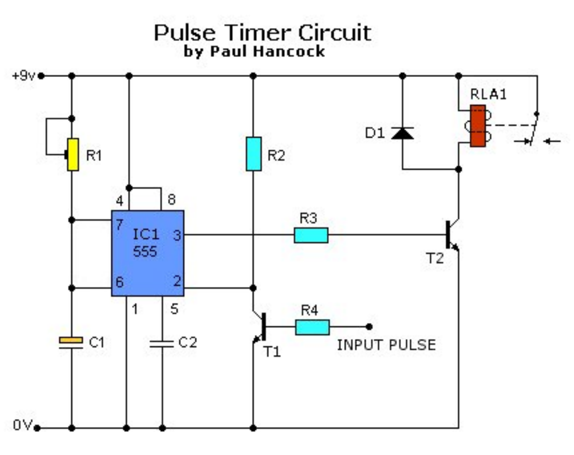

Parts List:

```
   R1 = 1 Meg, Preset Pot
   R2 = 10K
R3,R4 = 1K

   C1 = 10uF, 16V
   C2 = 0.01uF

   T1 = BC547 (Gen Purp NPN)
   T2 = 2N2222 (Hi Current NPN)
   D1 = 1N4001 (Gen Purp Si)
  IC1 = 555 (Lo-Power version)
 RLA1 = Relay, 9V (amps of your choice)
```

TIME PERIOD

R1	# Seconds
100K	2
220K	3
470K	6
1 Meg	15

To increase the time period, increase C1 to 100µF.

Circuit Operation:
IC1 is wired as a monostable multivibrator. Input pulses are applied to the base of transistor T1. This causes T1 to conduct, taking pin 2 of IC1 'low'. IC1 then enters a timing cycle, the duration of which is et by R1/C1, causing pin 3 of IC1 to go 'high'. This causes T2 to conduct. At the end of the timing cycle T2 switches off, and the circuit waits for the next pulse to T1.

T1 replacements: ECG123AP or NTE123AP (Rotate device 180° to conform with original lead configuration).
T2 replacements: ECG123A or NTE123A.

Paul's Note:
A question I see cropping up quite often on the forum is *"how do I switch on a relay for 'x' seconds with a 'y' volts pulse"*. You can use this circuit as a building block.

If you have any questions or are in need of other additional information in regards to the above circuit, please contact Paul Hancock here.

Back to Circuits page

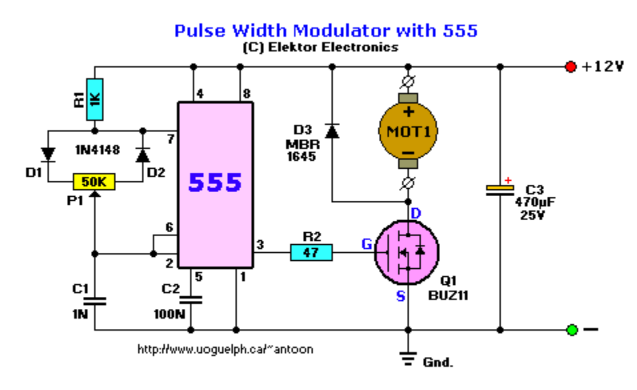

Parts List:

```
   R1 = 1K
   R2 = 47 ohm
   P1 = 50K potentiometer
   C1 = 0.001µF, (1nF) ceramic
   C2 = 0.1µF, (100nF), ceramic
   C3 = 470µF, 25V, electrolytic
D1,D2 = 1N4148, general purpose signal diodes
   D3 = MBR1645, NTE6081, or similar. 45V/16A Schottky Diode
   Q1 = BUZ11, NTE2389, MosFET, High Speed Switch, N-channel, 30V/35A
  IC1 = NE555, 8-pin Timer/Oscillator
```

Couple Notes:

This circuit is capable of regulating 12V motors and DC light bulbs. No coolrib required for Q1 or D3 if the current does not exceed 2A. If it does, a sufficient coolrib for both the Schottky Diode (D3) and MosFET Q1 is required.
The regulation is obtained via PWM or Pulse Width Modulation. The output pin 3 of the 555 provides square-wave with an adjustable duty-cycle. What that basically means is that the pulse width changes the speed of the motor. The output from the 555 feeds the mosfet via current limiting resistor R2 of 47 ohms. Because the MosFET Q3 only "switches" and is not behaving like a pot, its energy-waste level is negliable, and also provides the motor more coupling at low rpm. The maximum current Q1 can provide (safely) is about 10A. The replacement type mentioned in the parts list (NTE2389 can provide up to 35A at 60V. I use a cpu-cooler-fan for additional cooling at high rpm.

Back to Circuits Page

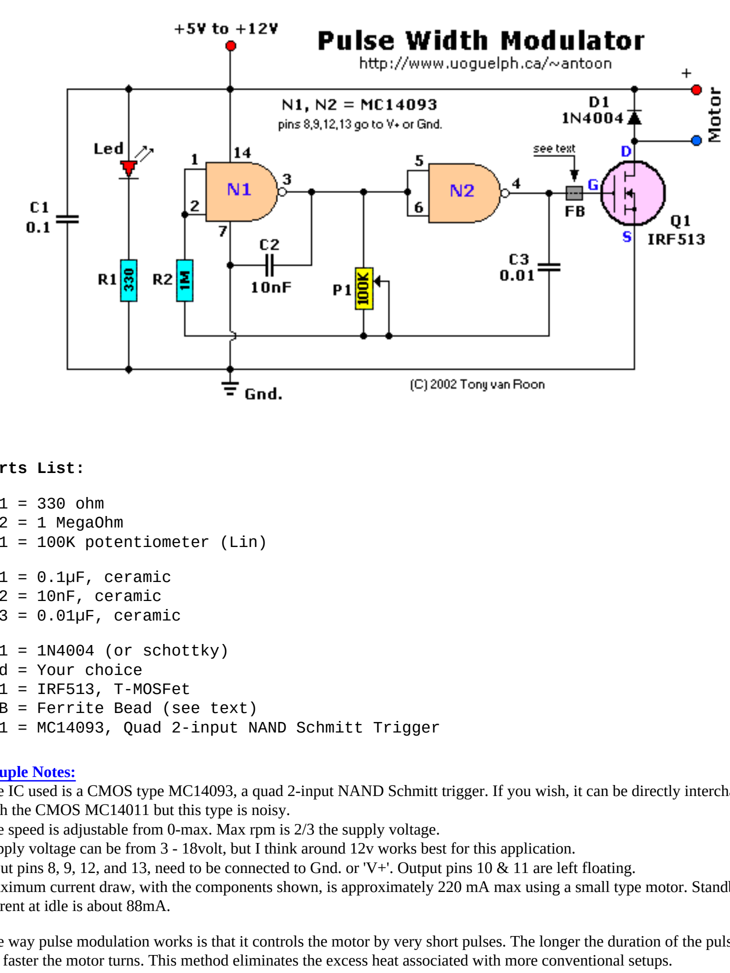

Parts List:

```
 R1 = 330 ohm
 R2 = 1 MegaOhm
 P1 = 100K potentiometer (Lin)

 C1 = 0.1µF, ceramic
 C2 = 10nF, ceramic
 C3 = 0.01µF, ceramic

 D1 = 1N4004 (or schottky)
Led = Your choice
 Q1 = IRF513, T-MOSFet
 FB = Ferrite Bead (see text)
IC1 = MC14093, Quad 2-input NAND Schmitt Trigger
```

Couple Notes:

The IC used is a CMOS type MC14093, a quad 2-input NAND Schmitt trigger. If you wish, it can be directly interchanged with the CMOS MC14011 but this type is noisy.
The speed is adjustable from 0-max. Max rpm is 2/3 the supply voltage.
Supply voltage can be from 3 - 18volt, but I think around 12v works best for this application.
Input pins 8, 9, 12, and 13, need to be connected to Gnd. or 'V+'. Output pins 10 & 11 are left floating.
Maximum current draw, with the components shown, is approximately 220 mA max using a small type motor. Standby current at idle is about 88mA.

The way pulse modulation works is that it controls the motor by very short pulses. The longer the duration of the pulses the faster the motor turns. This method eliminates the excess heat associated with more conventional setups.
Depending on the motor, Q1 may need a coolrib, and C2 modified to eliminate the 'jerk' at the end of P1's adjustment.
P1, the 100K potentiometer can be a multi-turn type if your needs are towards specific rpm's.
For Q1, the IRF513, I experimented with several other types such as the IRFZ42, IRF511, IRF513, and IRF620. They all seem to do the job, although I prefer the IRFZ42 type for its very low R_{ds}on

To minimize RFI (Radio Frequency Interference), put a **Ferrite Bead** on the gate of Q1, or if you can't obtain one, wind some 5 turns of thick magnet wire on a 10-ohm resistor (diameter approx. 1/4")
A schottky diode of proper specs may be required for some motors which require faster switching.

Here is some information in regards to the motor I used. Remember those full-height, black floppy drives from those old IBM pc's? That is exactly the motor I used. For those of you who remember that type, it was a belt drive model. The belt drove a little aluminum spindle. This motor is of excellent quality and made by the Buehler company in Kingston, USA.
A nice added feature is that those motors have a speed-sensor build-in and reads the rpm in AC volts. The yellow & green wires are the speed sensor and the red & blue wires are the positive/negative. It also has an extra aluminum shield around the motor-housing to keep rf interference to a minimum. Who wouldn't like a motor like that? If you can get your hands on them, take it!

Back to Circuits Page

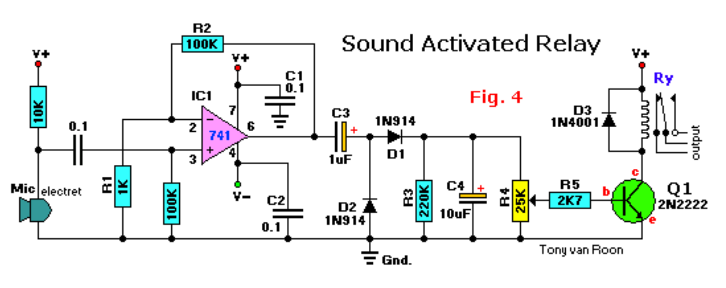

Parts List:

R1 = 1K	C1,C2 = 0.1µF, ceramic	Q1 = 2N2222, NPN, Transistor
R2 = 100K	C3 = 1 µF, electrolytic	IC1 = 741 op-amp
R3 = 220K	C4 = 10 µF, electrolytic	MIC = Electret Mike, 2-wire
R4 = 25K (pot)	D1,D2 = 1N914, 1N4148, or NTE519	Ry = Relay, your voltage/amps
R5 = 2K7	D3 = 1N4001	

This relay remains dormant until the op-amp activates upon sound via the electret-microphone. I only tested the 2-wire type.
The input stage is a regular off-the-shelf 741 operational amplifier and connected as a non-inverting follower audio amplifier.
Gain is approximately 100 which you can raise by increasing the value of R2.
The amplified signal is rectified and filtered via C3, D1/D2, and R3 to an acceptable DC level. D1 and D2 can be any signal diode like 1N914, 1N4148, or the NTE519.
Q1, the 2N2222, is a general purpost NPN transistor and is not critical. The NTE123A will work too.
Potentiometer R4 is used to set the audio level to a desired sensitivity value to activate the relay via transistor Q1.
Diode D3 is mounted over the relay coil to absorb sparks when the relay opens. Cathode goes to '+'.
The op-amp configuration in this particular drawing needs a dual voltage powersupply which can be made from two 9 volt alkaline batteries.

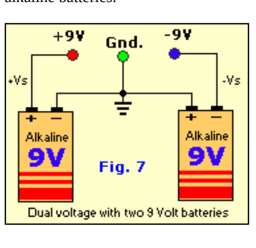

Transistor Driven Relay

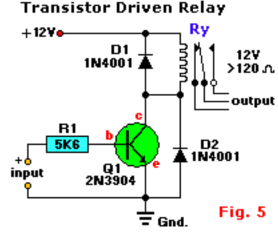

Fig. 5

This relay driver **boosts** the input impedance with a regular 2N3904 transistor (or equivalent). Very common driver. It can drive a variety of relays, including a reed-relay, and is non-latching.
Transistor Q1 is a simple common-emitter amplifier that increases the effective sensitivity of the 12 volt relay coil about a 100 times, or in other words, the current gain for this circuit is 100.
Using this setup reduces the relay sensitivity to a few volts. R1 restricts the input current to Q1 to a safe limit (the impedance is equal to the value of R1 plus 1K). Diodes D1 and D2 are EMF dampers and filter off any sparking when the relay de-energizes.

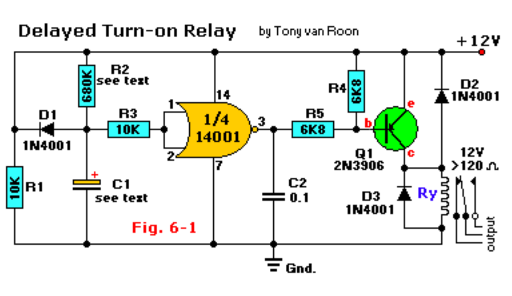

Parts List:

```
R1,R3 = 10K                      Q1 = 2N3906, or equivalent
   R2 = 680K (see text)         IC1 = 4001, or equivalent
R4,R5 = 6K8                D1,D2,D3 = 1N4001, or equivalent
   C1 = see text                 Ry = Relay, 12V
   C2 = 0.1µF, ceramic
```

This circuit is a delayed turn-on relay driver and can produce time delays for up to several minutes with reasonable accuracy.

The 14001 (or 4001) CMOS gate here is configured as a simple digital inverter. Its output is fed to the base of a regular 2N3906 (PNP) transistor, Q1, at the junction of resistor R5 and capacitor C2. The input to IC1 is taken from the junction of the time-controlled potential divider formed by R2 and C1. Before power is applied to the circuit, C1 is fully discharged. Therefore, the inverter input is grounded, and its output equals the positive supply rail; Q1 and RY1 are both off under this circuit condition. When power is applied to the circuit, C1 charges through R2, and the exponentially rising voltage is applied to the input of the CMOS inverter gate.

After a time delay determined by the RC time constant values of C1 and R2, this voltage rises to the threshold value of the CMOS inverter gate. The gate's output then falls toward zero volts and drives Q1 and relay RY 'ON'. The relay then remains on until power is removed from the circuit. When that occurs, capacitor C1 discharges rapidly through diode D1 and R1, completing the sequence.

The time delay can be controlled by different values for C1 and R2. The delay is approximately 0.5 seconds for every µF as value for C1. The delay can further be made variable by replacing R2 with a fixed and a variable resistor equal to that of the value of R2. Taken the value for R2 of 680K, it would be a combination of 180K for the fixed resistor in series with a 500K variable trim pot. The fixed resistor is necessary.

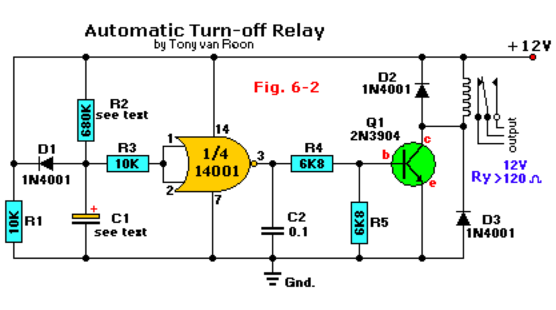

```
Parts List:
R1,R3 = 10K                     Q1 = 2N3904, or equivalent
   R2 = 680K (see text)        IC1 = 4001, or equivalent
R4,R5 = 6K8               D1,D2,D3 = 1N4001, or equivalent
   C1 = see text                Ry = Relay, 12V
   C2 = 0.1µF, ceramic
```

The above circuit is similar to the "Delayed Turn-on" type but now configured as an automatic turn-off type. The diagram shows how the circuit function can be reversed so that the relay turns on when power is applied but turns off again automatically after a preset delay. This response is obtained by modifying the relay-driving stage for an NPN transistor like the 2N3904.

It is worth noting again that the diagram provides a time delay of about 0.5 seconds for every microfarad in the value of capacitor C1. This permits delays of up to several minutes. If desired, the delay periods can be made variable by replacing resistor R2 with a fixed *and* variable resistor in series whose nominal values are approximately equal of the total value of R2 (680K).

---

1 to 100 Minute Timer Relay

by Tony van Roon

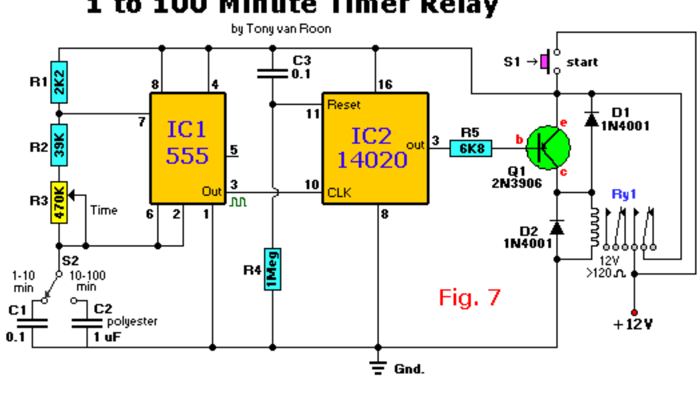

Fig. 7

Parts List:

```
   R1 = 2K2               IC1 = 555, timer
   R2 = 39K               IC2 = 14020, divider
   R3 = 470K (pot)         Q1 = 2N3906
   R4 = 1M              D1,D2 = 1N4001
   R5 = 6K8                S1 = Push switch, momemtary on
C1,C3 = 0.1µF, ceramic     S2 = Toggle switch, SPDT
   C2 = 1µF, polyester    Ry1 = 12V
```

This is an accurate **long-duration** time delay driver, switchable between 1 and 10 minutes or 10 to 100 minutes and whose function does not depend on electrolytic capacitors. Film dielectric caps have been selected. IC1 is configured as a free-running astable multivibrator which frequency is divided down by IC2, a 14020 (or 4020) CMOS 14-stage, ripple-carry binary divider. Consequently relay RY1 turns on as soon as switch S1 is closed, and it turns off again when the 8192nd astable pulse arrives. This method provides time periods ranging from 1 to 100 minutes, depending on the switch setting of S2.

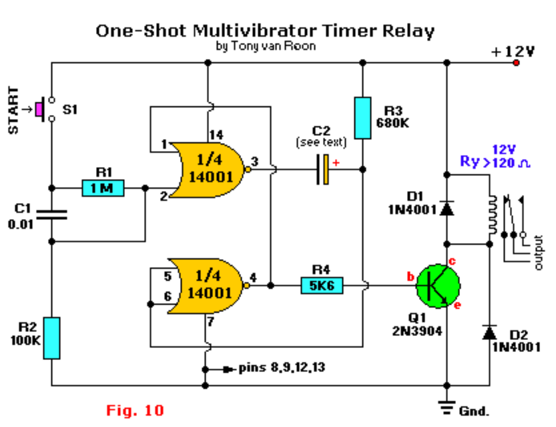

Fig. 10

Parts List:

```
R1 = 1M           D1,D2 = 1N4001
R2 = 100K            Q1 = 2N3904
R3 = 680K           IC1 = 4001
R4 = 5K6            Ry1 = Relay, 12V
C1 = 0.1uF           S1 = Momentary Push="on" switch
C2 = see text
```

Fig. 10: This circuit shows a pair of CMOS NOR gates which form a push-button-activated one-shot multivibrator relay-switching circuit that provides delays up to several minutes with resonable accuracy. The relay turns on as soon as the START switch S1 is closed.
However, it turns off again after a preset delay of about 0.5 seconds per microFarad (µF) of the value of capacitor C2. The two CMOS gates are configured as a manually-triggered monostable multivibrator whose output is fed to the relay through R4 and transistor Q1.

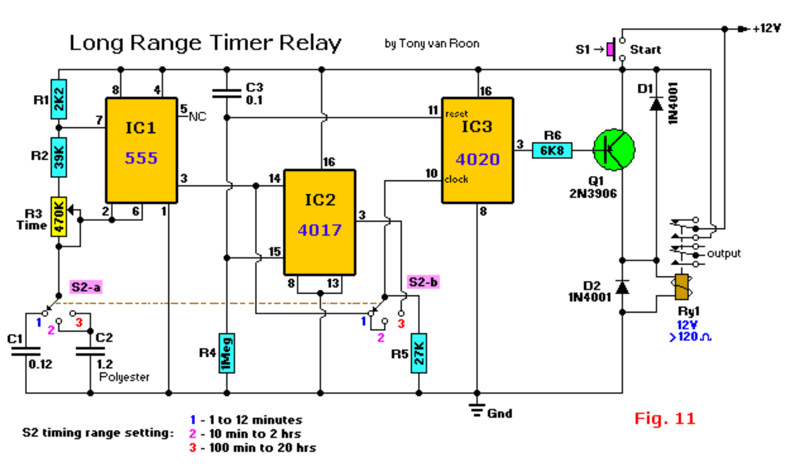

Fig. 11

Parts List:

```
   R1 = 2K2                     IC1 = 555, timer
   R2 = 39K                     IC2 = 14017, decade counter
   R3 = 470K (pot)              IC3 = 14020, divider
   R4 = 1M                       Q1 = 2N3906
   R5 = 27K                      D1 = 1N4001
   R6 = 6K8                      D2 = 1N4001
   C1 = 0.12µF, ceramic    S1 = Push switch, momemtary on
   C2 = 1.2µF, polyester   S2 = 3-step/2-deck rotary switch
   C3 = 0.1µF, ceramic    Ry1 = 12V
```

Fig. 11: Shows a 'long-range timer relay' switching circuit which spans 1 minute to 20 hours in three ranges using a three-step, two-deck mechanical rotary switch.

IC2 (4017) is a CMOS decade counter IC, a five-stage Johnson counter with 10 decoded ouputs. Inputs include a CLOCK, a RESET, and a CLOCK INHIBIT signal. This IC, together with IC3 and the 3-step rotary switch, can provide a maximum division ratio of 81,920 making it posible to time for periods up to 20 hours or so. Circuits like this are used in battery chargers and area security ligthing systems with time-controlled turn-off.
IC3 (4020) is a CMOS 14-stage, ripple-carry binary divider. Normally a 'high' would occur as soon as switch S1 is closed and a 'low' when the 8192nd astable pulse arrives. All counter stages of IC3, the 4020, are master-slave flip-flops. The state of a counter advances one count on the negative going transition of each input pulse, and a high level on the RESET line resets the counter to its all zeros state. All inputs and outputs are buffered.

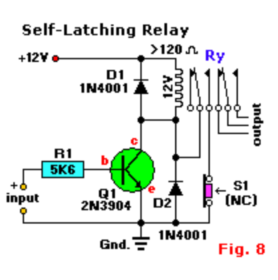

Parts List:

```
   R1 = 5K6
D1,D2 = 1N4001
   Q1 = 2N3904
   Ry = Relay, 12V
   S1 = Momentary break (normally closed)
```

This relay driver is **Self-Latching** which means that once it activates it will stay in remain in that state until S1 is pressed and momentarily disrupts power to the latch.

The rest of the circuit is the same as in Booster Relay Driver.

Light Sensing RF Transmitter

http://www.uoguelph.ca/~antoon

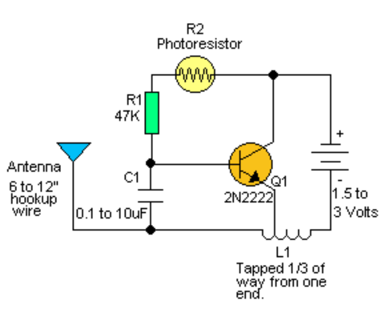

This transmitter is very similar to the Simplest RF Transmitter. The only difference being the photoresistor placed in series with R1. This could also be a thermistor or other variable resistance sensor. The frequency of the tone or "clicks" that is transmitted varies with the amount of light falling on the photo-resistor.

L1 is 20 to 30 turns of 24 to 32 ga. magnet wire close wound around a 1/8 to 1/4" diameter non-conductive form and tapped 1/3 of the way from one end. The tap is connected to the emitter of Q1.

The user should be able to pick up the signal from this transmitter on any regular FM or VHF receiver. By increasing the number of turns on L1, the RF frequency can be dropped down all the way into the AM broadcast band.

Back to Circuits page

ScanMate

by Tony van Roon

"Add this easy project to your regular scanner or DX'ing apparatus and never miss action again. Or use this system to check a range of frequencies for band activity when you're not there. I use it to check a range of 'secret' frequencies overnight when I'm sleeping. Works for me."

Introduction:

What exactly is 'ScanMate'? Read on. It never seems to fail. You wake up in the morning, turn on the radio news, and there it is: A major fire across town, a drug bust in the local park, police chases, or an airliner forced to make an emergency landing along the highway. Such events always seem to happen just after you have turned off your scanner and gone to bed, or left the house.

Some of the hottest action to come over the air waves for months, and you missed it....that is, until *ScanMate!* With ScanMate connected between your scanner and a tape recorder (via the recorder's microphone or auxiliary input and its remote start jack), you will never have to worry about missing any of the action again.

ScanMate is similar to several of the available commercial units, but offers greater flexibility. The ScanMate unit has a 'level' control that allows it to be used successfully with any type of scanner--portable or base unit--regardless of its output-amplifier configuration. It also provides control over the length of time the recorder continues to run after the transmission ceases. Also included in the circuit is a switch that allows you to select either automatic or manual operation.

When ScanMate is set to the auto-mode, the recorder's motor operates only during transmissions. In the manual-mode, the motor is activated whenever any of the recorder's functions (play, rewind, etc.) is selected. That allows all the interconnection cables to remain in place when you decide to rewind and listed to the tape. A speaker in/out switch is provided to allow monitoring (via the circuit's build-in speaker) while recording. In addition, ScanMate provides both microphone and line-level outputs, so that even the least-sophisticated recorders can be used.

How It Works:

Figure 1 is the schematic diagram of the ScanMate circuit. Audio coming from the scanner's earphone or speaker jack is fed to the circuit via J1. Jack J2, which is wired parallel with jack J1, provides a line-level output for input to the recorder via its auxiliary input jack. The signal is also fed through a voltage divider, consisting of resistors R1 and R2, which attenuate the signal for the mic-out jack J3.

Switch S1 is used to switch speaker LS1 in and out of the circuit. In the 'out' position, a 10-ohm resistor, R3, is switched into the circuit in place of the speaker's 8-ohm impedance, providing a fairly constant lead for the scanner's output. Capacitor C1 blocks any DC voltage that might be present. The signal is then fed to the inverting input of U1a (1/2 of a LM1458 dual op-amp), the gain of which is set to about 150 by the R4/R5 combination. The output of U1a at pin 1 is rectified by diode D1. The peak voltage is fed across C2 to the non-inverting input of U1b, which is configured as a voltage comparator. When the voltage at pin 5 is higher than that set by P1 (the level/sensitivity control) at pin 6, the output of U1b swings to near the positive supply rail, lighting the green half of LED1, a bi-color Light Emitting Diode.

Resistor R7 limits the current to LED1. The high at U1b's output (pin 7) also turns on T1 which, in turn, activates a reed relay, Ry1, causing its contacts to close. The contacts of the relay act as the tape-recorder's motor on/off switch. When the voltage at pin 5 of U1b is lower than that at pin 6, its output swings close to the negative supply rail, illuminating the red half of LED1, and at the same time turning off T1 and Ry1, as well as the tape recorder's motor.

The discharge rate of C2, combined with the setting of P1, determines the time the recorder runs after the last transmission. With an LM1458 Op-Amp, and its relatively low input impedance a C2 value of 0.1uF provides an ideal discharge rate. However, if a high input impedance op-amp is used, such as one with JFET inputs, C2's value should be increased to around 5uF (4.7uF is ok) and the value of P2 should be adjusted to near 10-megohms. Some experimentation with the setting of P2 -- which value should be between 5 and 30 megohms -- may be necessary to achieve optimum performance. I only used the adjustable potmeter (P2) to find the optimum setting and then measured that resistance and replaced the pot with an appropriate value of a resistor (Rx). Works.

Diode D3 and capacitor C3 are used to shunt any harmful spikes produced by the relay's coil away from T1. Switch S2 is the 'Manual/Auto' select switch. When S2 is closed, it acts like the closed contacts of the relay, turning on the tape-recorder motor.

The circuit is powered from a dual 8-volt power supply, (see Fig. 2) consisting of a handful inexpensive components. The AC line voltage is fed through S3 (the on/off switch) and a Fuse of 0.25 Amp (250mA) to power transformer TR1, which reduces the 117V line to 6.3 volts. That voltage is then full-wave rectified by D4 and D5, and filtered by electrolytic capacitors C4 and C5, to provide a suitable power source for the circuit.

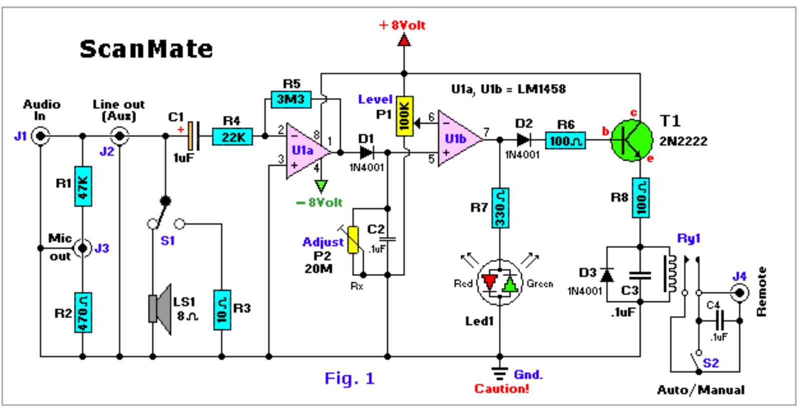

Fig. 1

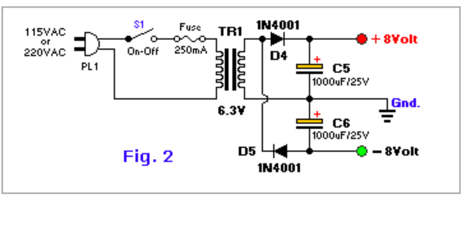

Fig. 2

by Tony van Roon
http://www.uoguelph.ca/~antoon

Parts List:

R1 = 47K
R2 = 470 ohm
R3 = 10 ohm
R4 = 22K
R5 = 3M3
R6 = 100 ohm
R7 = 330 ohm
R8 = 100 ohm
P1 = 100K, Lin
P2 = 20M 10-turn
(Rx) optional, see text

C1 = 1µF/16V
C2,C3,C4 = 0.1µF (ceramic)
C5,C6 = 1000uF/25V
D1,D2,D3,D4 = 1N4001
T1 = 2N2222
U1 = LM1458
LS1 = Speaker, 8-ohm
J1,J2,J3 = Jacks, 3mm*
J4 = Jack, 2mm*
LED1 = Bicolor LED*

S1 = on-on, SPDT Switch
S2 = on-off, SPST Switch
S3 = on-off, SPST Switch (115VAC)
Ry1 = Reed Relay, 5V-1A
TR1 = Transformer, 12.6V CT, PC-Mount
Socket for U1 (8-pin)
>>Radio Shack<< or Tandy part #'s

Notes: 3M3 (R5) same as 3.3M
µ = micro or u

Construction:

There is nothing critical about the circuit's layout, and its okay to use perfboard, but using the printed circuit board pattern shown in Fig. 3 helps to simplify matters. Jacks J1 to J4 should be of whatever type matches the inputs to your scanner and tape recorder. In my case, the mic/aux/audio jacks are the standard 3mm and the remote jack 2mm in the ScanMate prototype.

Fig. 4 is the parts-placement diagram for ScanMate's printed circuit board. Note that several components for the circuit are mounted off-board on the front and rear panel of the project enclosure. After positioning the off-board components, run short lengths of hookup wire from the appropriate points on the board to those components.

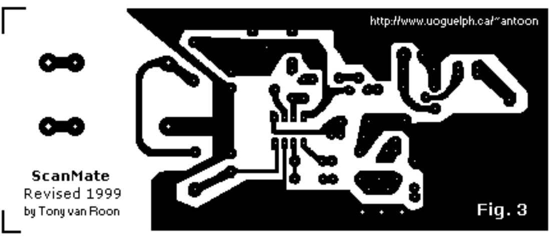

Fig. 3

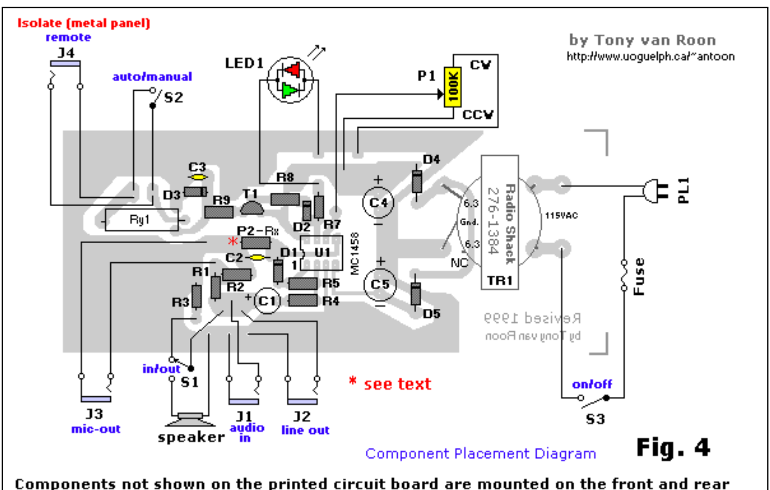

Component Placement Diagram

Fig. 4

Components not shown on the printed circuit board are mounted on the front and rear panel of the enclosure.

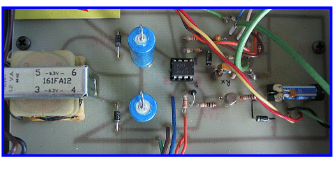

Turning to the bi-colored LED used in the circuit; if a similar unit cannot be found, the two-color unit can be replace by two discrete LED's. Of course, it will be necessary to supply an appropriate dropping resistor for each unit; or if you decide to hook them up back-to-back (duplicating the unit's schematic symbol), you may have to play with the value of the dropping resistor.

I used a Radio Shack 12.6 volt, center-tapped (ct) transformer in the power-supply of his prototype. I was unable to obtain the 300mA version so saddled for the 500mA type which meant modifying the PCB a bit since the transformer is larger in size. The output of the transformer is taken from its center tap, thereby providing 6.3 volts AC for the rectifier circuit. If you have difficulty in locating a similar unit, you might consider using a 12-volt transformer (with sufficient current rating), along with a 7808 and a 7908 (positive and negative, respectively), 8-volt, three terminal regulators. If you choose to go that route, be sure not to overlook the filter capacitors.

I have not experimented with an DC-type adapter but don't see why that should not work. If you have a 8 or 9 volt DC adapter of at least 300mA or better, try it. Saves the cost of the power supply parts + powercord in Fig. 2.

As for the enclosure itself, there are a couple of things to watch for should you decide to use a metal cabinet to house the project (as in my case). A lot of tape recorders with positive grounds or other unusual circuitry react violently to having either side of their remote start switches grounded. To prevent that problem, the remote start jack (J4) should be covered with heat shrink, or whatever, to keep the contacts completely isolated from ScanMate's other circuitry. You will most likely hear tremendous 'hum' if the remote jack is improperly isolated from the metal panel. (if, of course, you use a case with metal front and rear panels). You may have noticed that, unlike the other jacks, the remote jack is not connected directly to ground.

TR1 is a pc-mountable 12.6volt/300mA Center Tapped transformer. I purchased mine at Radio Shack: #276-1385. Some modifications were required to the PCB-layout to make the transformer fit nicely. Just in case you don't have a lot of experience with electronics and you're wondering why the schematic shows 6.3V and the parts list 12.6V. The transformer is a so-called 'center-tapped' model which means 6.3V - 0 - 6.3V. Either side of the '0' provides 6.3V. The '0' is the center-tap (Gnd.), or CT for short. We only use one side of the transformer with the center tap. CAUTION: Because of the +8 and -8 volts, the above circuit ONLY uses the ground coming from the center-tap of TR1!
In addition, because the circuit derives power from a 117-volt AC outlet, make certain that the board is mounted in its enclosure on standoffs to prevent the board from coming in contact with the cabinet.
Making a neat cutout for speakers is always a problem, if you're not handy with mechanical equipment, but can be easily solved by putting the opening at the bottom of the cabinet, where imperfections won't be noticed. I solved the problem by drilling 3 millimeter holes in a half star pattern. Looks really good. Anyone can drill a couple of holes right?
Check my **Radio Shack** data sheet for partnumbers; makes things easier when you visit the Radio Shack/Tandy store.

Just in case you have any problems finding some of the parts: You can replace the 2N2222 for a NTE123A (not AP), a 2N2219, BC107, or a TUN type as specified in Elektuur (Elektor), or try something else (if it works it works right?). By the way, a 2N2222 is the same as the MPS2222A type from Radio Shack. If you can't find the LM or MC1458, use the NTE778A, or the 276-038 model from Tandy/Radio Shack; they are all pin-for-pin compatible as far as I know. The 1N4001 diodes can be substituted with a NTE116 or the #276-1101 model from Radio Shack. A 1N4002 or 1N4003 model will work just fine also, they just have a higher PIV. Transformer TR1 is available from Radio Shack as the #273-1384 6.3v/300mA. Use what's available in your area.

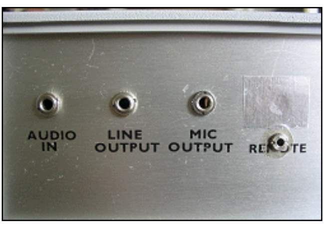

Using The ScanMate:

After connecting ScanMate, a scanner, and a tape recorder together, flip the speaker switch (S1) to the 'on' position and turn the 'level/sensitivity' potentiometer (P1) fully counter-clock-wise. Next, find a busy channel on the scanner and put the tape unit into the record mode. LED1 should be red, meaning the tape is stopped. Slowly turn the P1 potentiometer clockwise until the bi-colored led turns green. At that point, your tape recorder should be running, recording everything coming over the scanner. Turn back a little back until the red led comes on again and the tape recorder stops. Monitor the whole thing for a bit and re-adjust if necessary.
Now switch to a silent channel and check how long it takes for ScanMate to shut off the recorder. If the delay isn't right, turning the 'Level' potentiometer clockwise (up to a certain extend), will increase the time before shut-off, turning it counterclockwise shortens the delay. Again, keep in mind that the level of delay is limited by the values of P1 and C2.

Copyright and Credits:

The original project was written by Tim Goebel under the name "Auto Scan". Reproduced from Popular Electronics, August 1989, by permission of Gernsback Publishing, Inc., 1996. Revised, updated, and modified. All diagrams, Printed-Circuit Board and Layout redrawn by Tony van Roon. Gernsback Publishing, Inc., no longer exist.
Re-posting or taking graphics in any way or form of this project is expressibly prohibited by international copyright © laws.

Back to Circuits page

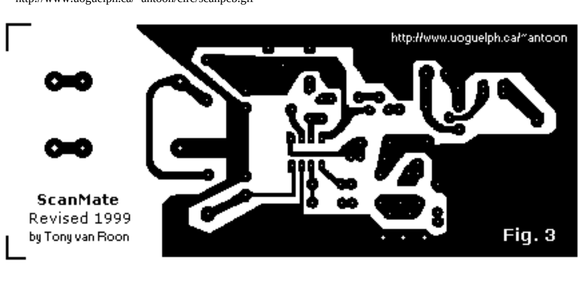
http://www.uoguelph.ca/~antoon
ScanMate
Revised 1999
by Tony van Roon
Fig. 3

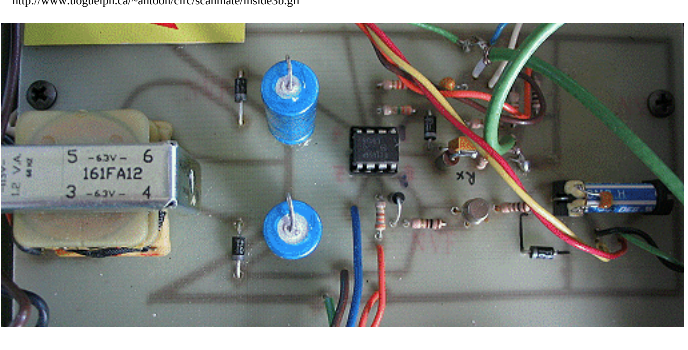
5 -6.3V- 6
161FA12
3 -6.3V- 4
12 VA
Rx

Simplest R/C Circuit

by Tony van Roon

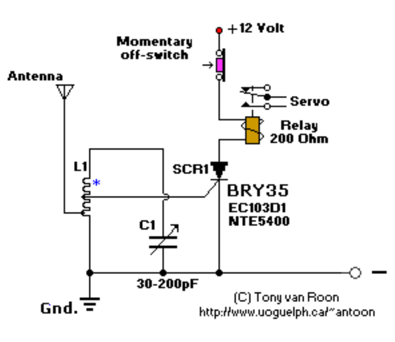

A simple and effective receiver for actuating garage doors, starter motors, alarms, warning systems and numerous other possibilities. The SCR, which has a very low trigger current of 30 uA is typical -- it requires an input power of only 30 uW to activate the relay. A high Q tuned antenna circuit assures rejection of spurious signals. A whip or wire antenna is adequate up to 100 feet from a low power transistor transmitter. A momentary-off switch resets the circuit.

The circuit specifies a *whip* or *wire* antenna which just means a solid piece of wire 6-12 inches long (15-30cm). The antenna coil is experimental but you can start with 10 to 12 turns of #22 (0.7mm) magnet wire, and 5/16" (8mm) coil diameter. Antenna wire is soldered at 1/2 turn of the coil and the gate of the BRY35 is soldered about halfway the coil. This circuit will transmit up to 100-feet with the above specifications @ 30uA.
The relay coil is specify's up to 200 ohm but that's just the one I had in stock. Any low-ohm relay, even at 9V or so, should work. And a final note, don't expect too much from this circuit. The "Simplest R/C Circuit" is just that; SIMPLE!

The BRY35 is an old semiconductor made by Philips. A good replacement would be the EC103D1, also made by Philips (see pin-out picture for this device). NTE Semiconductors gives a replacement of NTE5405, but I have not tried it. In my opinion, a NTE5400 (30V) or NTE5401 (60V) will work just as well. The NTE5405 is a bit overkill at 400V.

Back to Circuits Page

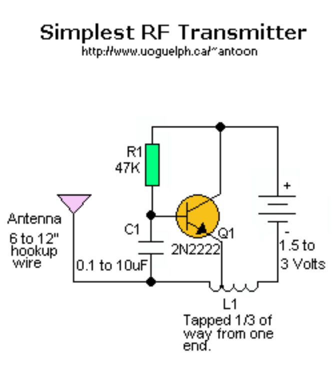

This is probably the simplest radio transmitter that you will find anywhere. It has a total of five parts and can be constructed into a very small space. It is great for science fair projects or other science related projects where short range transmission is useful. It runs on 1.5 to 3 volts, with small hearing aid batteries or lithium "coin" cells being ideal. A thermistor or photoresistor can be inserted in series with R1 to have a varying output frequency dependent on the input. The frequency can also be changed by changing the value of C1. A 2N2222 transistor is recommended, but you can try other types also. Performance tends to vary from type to type as well as from transistor to transistor. L1 is 20 to 30 turns of thin magnet wire (24 to 32 ga.) close wound around a 1/8 to 1/4" diameter non-conductive form. The coil is tapped 1/3 of the way from one end and the tap connected to the emitter of Q1. Experiment with all of the values in this circuit. Nothing is critical, but performance can be varied considerably.

Back to Circuits page

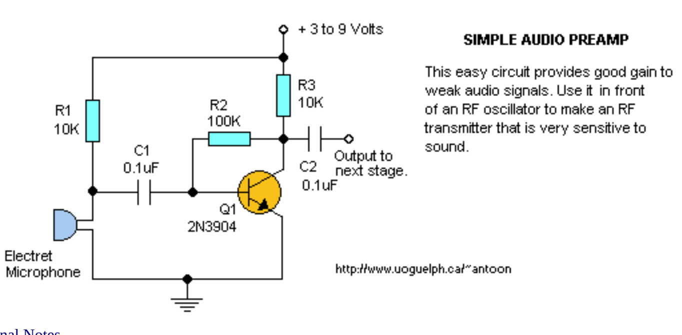

Additional Notes

None of the parts are critical. Use whatever you have. Again, note that the microphone is a "electret" type.

Back to Circuits page

Single IC Audio Preamplifier

by Tony van Roon

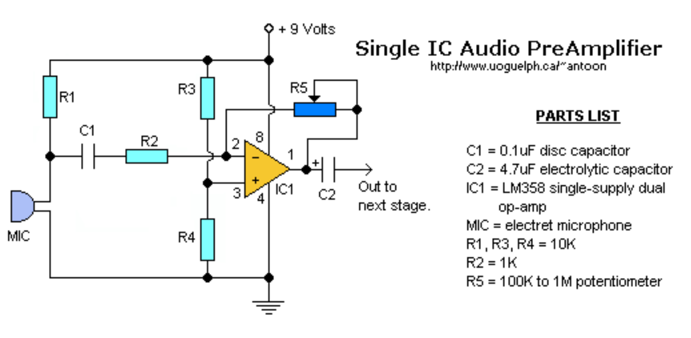

Additional Notes
Parts are non-critical components and available from most Radio Shack stores.

Back to Circuits page

Single Cell SLA Charger

SLA = **S**ealed **L**ead **A**cid

Schematic of the charger

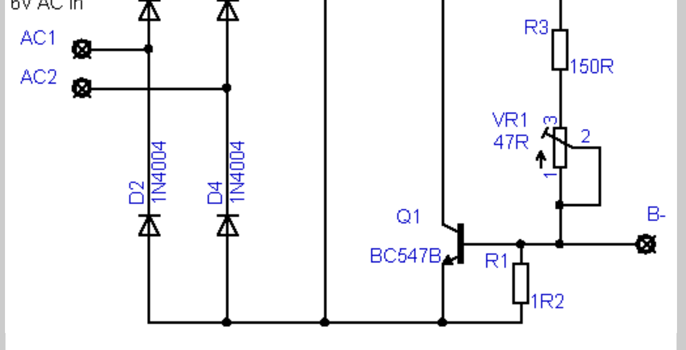

Single Cell SLA Charger

This charger is only meant for single cells of the lead/acid variety.
It can be used for cells with a capacity of up to around 10Ah if R1 is changed accordingly. *SLAs should be charged with a current of from 10% to 30% of their rated capacity (in Ah or mAh)*

The circuit should never be left connected to a cell while the (mains) power is off, as this will drain the battery and could possibly damage the charger.
Wrong cell polarity **will** damage the charger.
These two issues could be solved by adding some bits 'n' bobs, but it is my understanding, that most people tends to go for the simpler/cheaper circuit, so I left that out.

Set the charging voltage, without a cell connected, for 2V35.

Charge only at or around room temperature (20-25°C).

PCB Lay Out

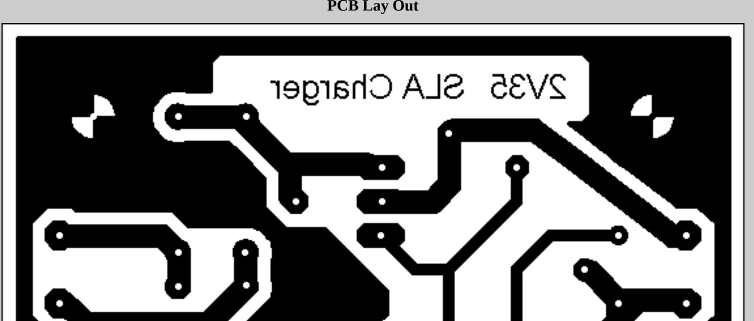

Component Overlay

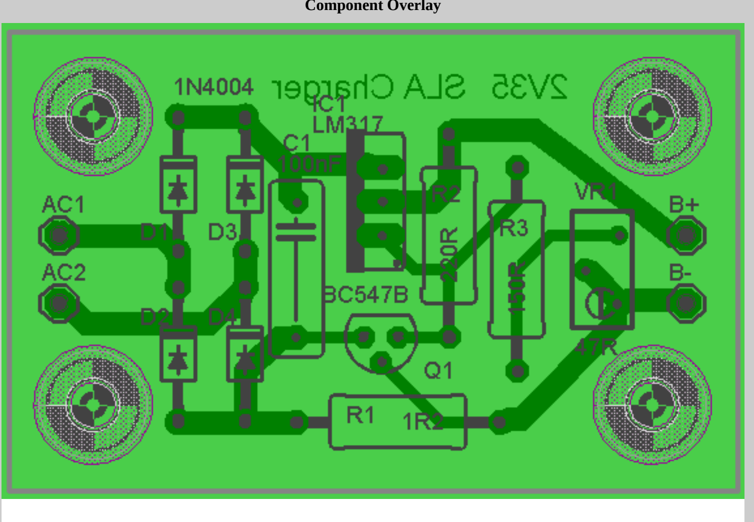

How to heat sink

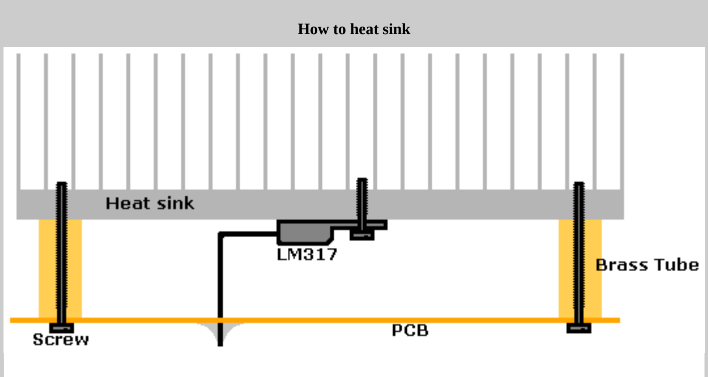

Bill of materials

R1	1R2 0.5W*
R2	220R
R3	150R
VR1	47R
C1	100nF
D1-D4	1N4001*
Q1	BC547B*
IC1	LM317T

*** Notes**
D1-D4 can be any diode capable of 1A+ and Q1 can be just about any small signal NPN transistor

R1 could be selected for other charge currents:

R1		Charge Current mA	Cell Capacity to charge (aH)
4R7	1/4W	130-150	380-1,500
3R9	1/4W	150-180	460-1,800
3R3	1/4W	180-210	550-2,100
2R7	1/4W	220-260	670-2,600
2R2	1/4W	270-320	820-3,200
1R8	1/3W	330-390	1,000-3,900
1R5	1/3W	400-470	1,200-4,700
1R2	1/2W	500-580	1,500-5,800
1R0	1/2W	600-700	1,800-7,000
0R82	1W	700-900	2,200-8,500
0R68	1W	900-1,000	2,600-10,300

2004-10-27, by Søren.

Solid State Relais

by Jan Hamer

Solid State Relays are available almost everywhere these days, however they remain very expensive. Therefore, your efforts to build one yourself pays off. Especially since it only needs a handful components and the circuitry is simple and straightforward.

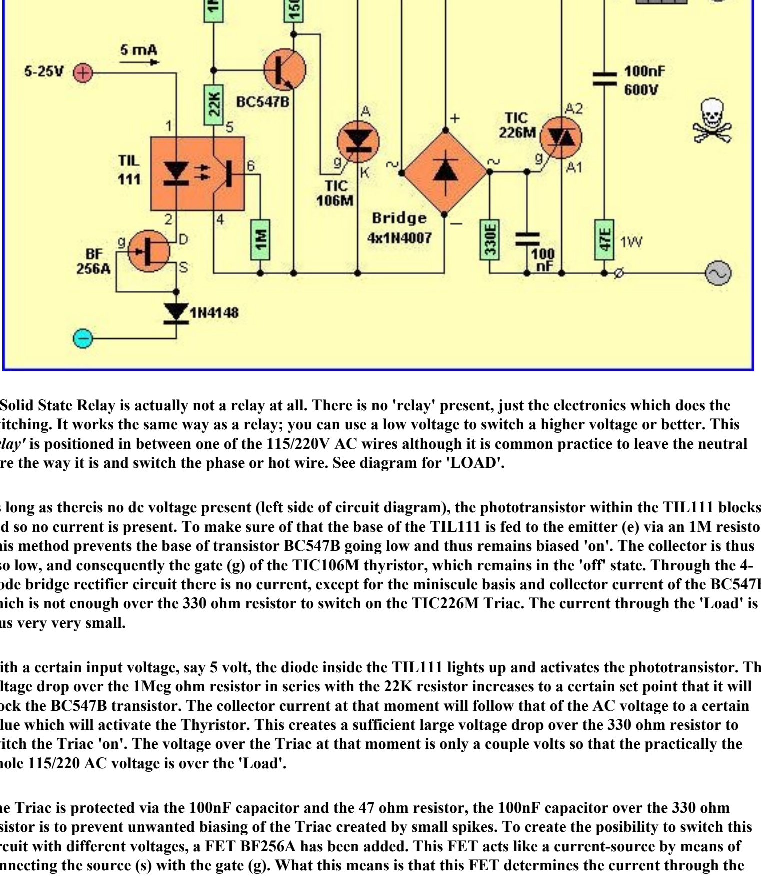

A Solid State Relay is actually not a relay at all. There is no 'relay' present, just the electronics which does the switching. It works the same way as a relay; you can use a low voltage to switch a higher voltage or better. This *'relay'* is positioned in between one of the 115/220V AC wires although it is common practice to leave the neutral wire the way it is and switch the phase or hot wire. See diagram for 'LOAD'.

As long as thereis no dc voltage present (left side of circuit diagram), the phototransistor within the TIL111 blocks and so no current is present. To make sure of that the base of the TIL111 is fed to the emitter (e) via an 1M resistor. This method prevents the base of transistor BC547B going low and thus remains biased 'on'. The collector is thus also low, and consequently the gate (g) of the TIC106M thyristor, which remains in the 'off' state. Through the 4-diode bridge rectifier circuit there is no current, except for the miniscule basis and collector current of the BC547B which is not enough over the 330 ohm resistor to switch on the TIC226M Triac. The current through the 'Load' is thus very very small.

With a certain input voltage, say 5 volt, the diode inside the TIL111 lights up and activates the phototransistor. The voltage drop over the 1Meg ohm resistor in series with the 22K resistor increases to a certain set point that it will block the BC547B transistor. The collector current at that moment will follow that of the AC voltage to a certain value which will activate the Thyristor. This creates a sufficient large voltage drop over the 330 ohm resistor to switch the Triac 'on'. The voltage over the Triac at that moment is only a couple volts so that the practically the whole 115/220 AC voltage is over the 'Load'.

The Triac is protected via the 100nF capacitor and the 47 ohm resistor, the 100nF capacitor over the 330 ohm resistor is to prevent unwanted biasing of the Triac created by small spikes. To create the posibility to switch this circuit with different voltages, a FET BF256A has been added. This FET acts like a current-source by means of connecting the source (s) with the gate (g). What this means is that this FET determines the current through the TIL111, no matter what voltage is put on the input (within certain tolerances ofcourse). The diode 1N4148 is to protect the circuit in case of polarity reversal.
(Tony: The TIL111 is a so called 'optoisolator' with an NPN output and can be replaced with a NTE3042)

A good point of a circuit like this is the seperation of the DC and AC voltages, so this circuit could be used in a variety of applications, up to approximately 1.5 KiloWatt, if you mount the Triac on a large cooling-rib.
The 'M' indicator noted on the Triac means it is a 600volt type, a 'D' stands for 400volt. So make sure you go for the M type.
(Tony: The NTE replacements for this circuit are 600volt types which is more than sufficient for our 110/115VAC.)
Also, if you decide to make a pcb for this circuit, to create sufficient space between the AC lines and don't make these AC tracks too narrow.

Published & Translated from Dutch into English with permission of Jan Hamer, The Netherlands.

Back to Circuits page

Pulsing Third Brake Light

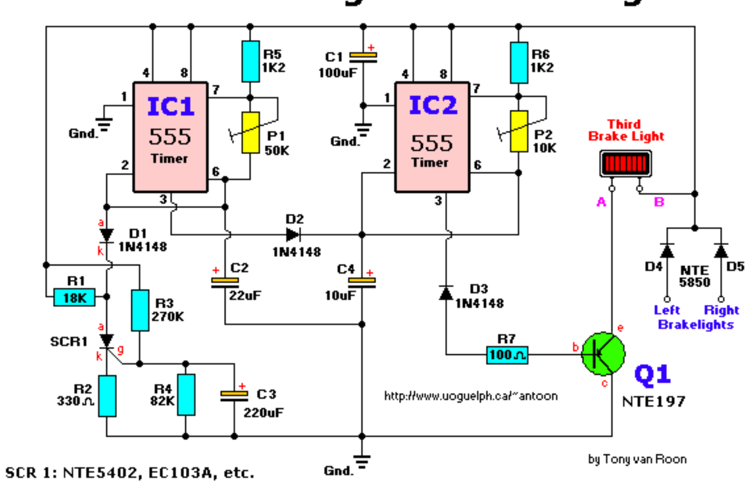

Caution: I'm checking into the legalities of this particular circuit at this time. Any type of flashing light on the **main** brakelights is prohibited and illegal in *most* states of the U.S.A. I'm verifying for the same here in Canada. In the mean time, use this circuit at your own risk and be aware that the possibility exists to be stopped by law enforcement if you implement this circuit in your vehicle.
Use in my motorcycle: Several years ago these flashers were introduced in the automotive industry as part of the third brake light (and were flashing continuously) but got abandoned sometime later because of the 'strobe' effect (some of them kept flashing continuously) it has on some people. However, there is a major difference between this flasher and the ones from the automotive industry and others. This flasher gives 3 or 4 flashes, at reduced intensity, and then goes solid. They do not have the 'strobe' effect in any way or form, in my opinion. My main concern, when driving my motorcycle, is to be seen early enough. Seems to work.

Parts List

Semiconductors:
```
 IC1,IC2 = 555 Timer, RS #276-1723
    SCR1 = NTE/ECG5402, RS #276-1067, EC103A, MCR104, etc.
      Q1 = NTE/ECG197, SK3083, TIP125, or equivalent
D1,D2,D3 = 1N4148, 1N914, NTE/ECG519, RS #276-1122
   D4,D5 = 1N5400, NTE/ECG5850, RS #276-1141, or equivalent
```

Resistors:
```
      R1 = 18K (Brown-Gray-Orange)
      R2 = 330 ohm (Orange-Orange-Brown) (RS #271-1315)
      R3 = 270K (Red-Violet-Yellow)
      R4 = 82K (Gray-Red-Orange)
   R5,R6 = 1K2 (Brown-Red-Red) (1200 ohm)
      R7 = 100 ohm (Brown-Black-Brown) (RS# 271-1311)
      P1 = 50K, 10-turn
      P2 = 10K, 10-turn
```

Capacitors:
```
      C1 = 100µF/16V (RS# 272-1016)
      C2 = 22µF/16V  (RS# 272-1014)
      C3 = 220µF/16V (RS# 272-1017)
      C4 = 10µF/16V  (RS# 272-1013)
```

Q1 is a PNP Silicon Audio Power Out/Medium Power Switch Transistor, 7A, with a TO-220 case. As long as you have a transistor which is close it will work fine. The SCR is a 100vrm, 0.8A, sensitive gate with a TO-92 case. Diodes D1, D2 and D3 are standard small signal diodes. Power diodes D4 and D5 are the 6A, 50prv types, cathode case. The 60vrm type will work as well. I used for IC1 & IC2 the LM555 type. P1 controls the 'on' and pulse-duration, P2 controls the pulse-timing.

Applying the Brakes: When you first press the brakes, this circuit will turn on your 3rd brake light via the main brake lights. After about a second a series of short pulses occur. The number of pulses can range from approximately 1 to 10, depending on the setting of P1/P2 and when the brake pedal was applied last. After the pulses have been applied the third brake light assumes normal operation. The prototype was set for five flashes which seemed more than enough. Two days later I re-adjusted the trimmer potentiometers for 4 flashes. Looks pretty cool!

Circuit Description: The schematic consists of two 555 timer/oscillators in a dual timer configuration both setup in astable mode. When power is applied via the brake pedal, the brake light driver Q1 is switched on via the low-output pin 3 of IC2, and timer IC1 begins its timing cycle. With the output on pin 3 going high, inhibiting IC2's pin 2 (trigger) via D2, charge current begins to move through R3, R4 and C2.
When IC1's output goes low, the inhibiting bias on pin 2 of IC2 is removed and IC2 begins to oscillate, pulsing the third brake light via the emitter of Q1, at the rate determined by P2, R6, and C4. That oscillation continues until the gate-threshold voltage of SCR1 is reached, causing it to fire and pull IC1's trigger (pin 2) low. With its trigger low, IC1's output is forced high, disabling IC2's trigger. With triggering disabled, IC2's output switches to a low state, which makes Q1 conduct turning on the 3rd Brake Light until the brakes are released. Obviously, removing the power from the circuit at any time will reset the **S**ilicon **C**ontrolled **R**ectifier SCR1, but the RC network consisting of R4 and C2 will not discharge immediately and will trigger SCR1 earlier. So, frequent brake use means fewer flashes or no flashes at all. But I think that's okay. You already have the attention from the driver behind you when you used your brakes seconds before that.
The collector/emitter voltage drop across Q1 together with the loss over the series fed diodes D4/D5, will reduce the maximum available light output, but if your car's electrical system is functioning normally in the 13 - 14volt range, these losses are not noticeable.

Building Tips: You can easily build this circuit on perfboard or on one of RS/Tandy's experimentors boards (#276-150), or use the associated printed circuit board listed here.
Keep in mind that Q1 will draw most likely 2 or 3 amps and mounting this device on a heat sink is highly recommended.
Verify that the scr is the 'sensitive gate' type. In incandescent bulbs, there is a time lag between the introduction of current and peak brightness. The lag is quite noticeable in an automotive bulb, so the duration of a square wave driving such a bulb should be set long enough to permit full illumination. For that reason, and because lamps and car electrical systems vary, adjustment via P1 and P2 is necessary to provide the most effective pulse timing for your particular vehicle.
The reason that the third light is connected to both brake lights is to eliminate the possibility of a very confusing display when you use your turn signal with the brakes applied.
The cathode of D4 and D5 are tied together and go to point 'B' of the third brake light in the component layout diagram. Point 'A' goes to the other leg of the third brake light. Most if not all third brake lights in Canada & USA have two wires, the metal ones also have a ground wire which obviously goes to ground. I don't know the wiring scheme for Australian and European third brake lights.
Don't forget the three jumpers on the pcb; two jumpers underneath IC1/IC2 between pin 4/8 and the one near Q1/R6.
If you use a metal case, don't forget to insulate the D4/D5 diodes. (For motorcycle you can eliminate D5).

Some 90's cars, like my 1992 Mercury Sable, have two bulbs inside the third brake light, each bulb is hooked up separately to the left and right brake light for reasons only Ford knows. Click here for a possible 2-bulb hookup. It shows how I modified mine to get it working; and that was easier than I expected. Current draw with the two bulbs was measured at 1.85Amps (1850mA). Even with double the current none of the circuit components were getting hot. I had to re-adjust the two pots to make it flash since the bench testing was done with one bulb.

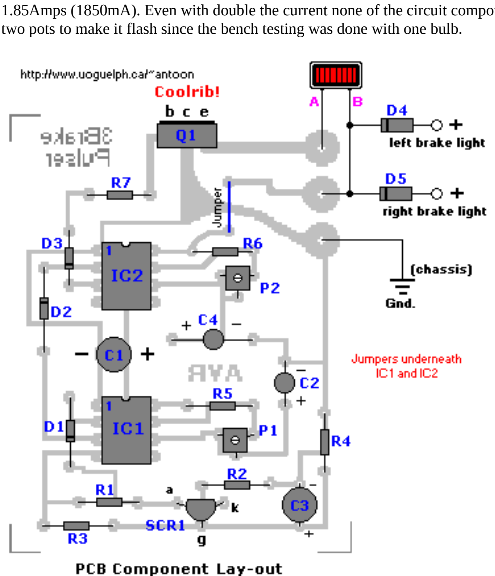

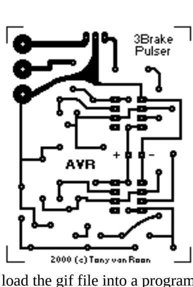

The pcb measures 2 x 2.5 inch (5 x 6.4cm or 170 x 200 pixels) at 2 colors and is shown smaller when you print these pages. If you need a direct, full size copy of the pcb I suggest to load the gif file into a program like Paint Shop Pro or one of the many gif viewers available. This pcb was modified by **Bert Vogel** and [illegible]

[illegible]

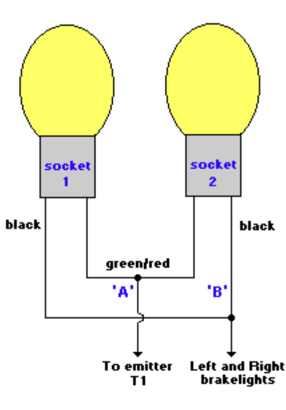
socket
1
socket
2
black
black
green/red
'A'
'B'
To emitter
T1
Left and Right
brakelights

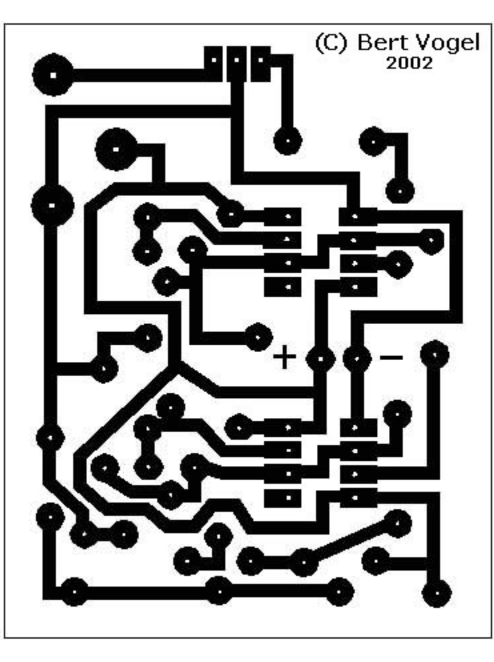
(C) Bert Vogel
2002
+
−

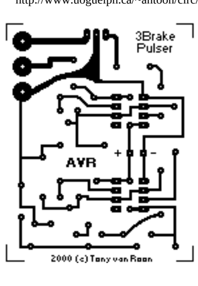
3Brake
Pulser
AVR
+
-
2000 (c) Tony van Roon

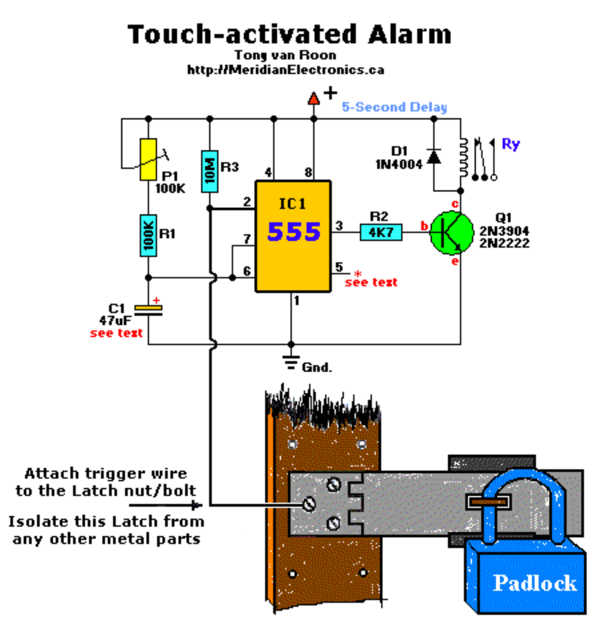

Parts List

```
R1 = 100K         D1 = 1N4004, general purpose diode
R2 = 4K7          C1 = 47µF/16V
R3 = 10M         IC1 = 555 Timer
P1 = 100K         Q1 = 2N3904, 2N2222, or similar
Ry = Relay
```

Additional Notes

Not much to tell here as the circuit speaks for itself. The 555 can be almost any type, they are all pin-compatible. Although some CMOS types may not have enough power to drive the transistor, in that case use an ordinaire 555. **C1's** working voltage should be increased to 25V if you decide to go with a 12V power source. Change the value of C1 for the desired output pulse.

For the timing use this equation: **T=1.1*(R1+P1)*C1** assuming R1 + P1 = 150K, then select C1 as follows: C1 = 6µF for each 1-second pulse width. For example, if you want the pulse widcth to be 5 seconds, C1 should be 30uf or nearest value like 22 or 33µF. Addionally, P1 can adjust the rest.
Rule of thumb: the working voltage of capacitors are at least double the supplied voltage, in other words, if the powersource is 9Volt, your capacitor(s) is at least 18V. Transistor T1 can be any approximate substitute. Use any suitable relay for your project and if you're not tight on space, use any size. I've build this particular circuit to prevent students from fiddling with the security cameras in computer labs at the University I am employed. I made sure the metal casing was not grounded. But as the schematic shows you can basically hook it up to any type of metal surface. I used a 12-vdc power source. Use any suitable relay to handle your requirements. A 'RESET' switch (**N**ormally **C**losed) can be added between the positive and the 'arrow-with-the-+'. The trigger (touch) wire is connected to pin 2 of the 555 and will trigger the relay, using your body resistance, when touched. It is obvious that the 'touching' part has to be clean and makes good contact with the trigger wire. This particular circuit may not be suitable for all applications. Just in case you wonder why pin 5 is not listed in the schematic diagram; it is not really needed. In certain noisy conditions a small 0.01µF; ceramic capacitor is placed between pin 5 and ground. It does no harm to add one or leave it out.

***NOTE:* For those of you who did not notice, there is an approximate 5-second delay build-in before activation of the relay to avoid false triggering, or a 'would-be' thief, etc.**

AGAIN, make sure the latch is not touching anything 'ground' or the circuit just keeps resetting itself and so will not work. My shed has wooden doors so works fine. If you can't get yours to work, check the trigger input, verify there is some sort of signal coming from output pin 3, play with the value of R3/C1, etc. If you are interested in a short tutorial about the 555 Timer/Oscillator IC or find yourself having some problems understanding some of the pin functions, please check here: **555 Tutorial**

Thank you Ron Harrison for the modifications.

Back to Circuits Page

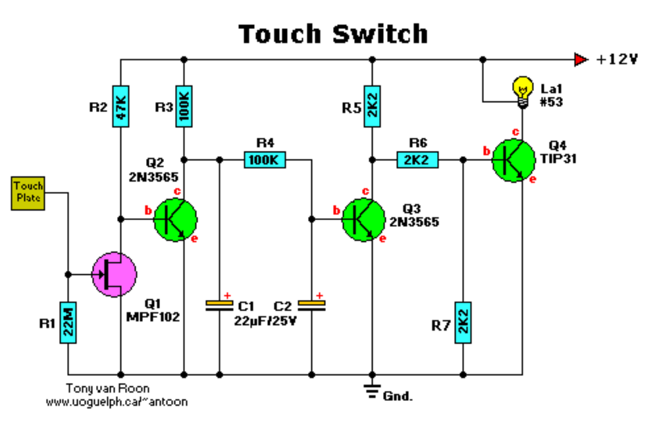

Parts List:

Part	Description	Radio Shack #	DigiKey #	Notes
R1	22Meg resistor			red red green gold
R2	47K resistor			yellow purple orange gold
R3,R4	100K resistor			brown black yellow gold
R5,R6,R7	2K2 resistor			red red red gold
C1	Capacitor, 22µF, 25V			Electrolytic
C2	Capacitor, 22µF, 25V			Electrolytic
Q1	MPF102			Transistor, NPN
Q2,Q3	2N3565			Transistor, NPN
Q4	TIP31			Transistor, NPN
La1	Bulb, #53			Try others

Couple Notes:
The MPF102 (Q1) can be replaced with a NTE451 or ECG451, but still widely available. JFET-N-CHAN, UHF/VHF AMP
The 2N3565 (Q1/Q2) can be replace with a 2N2222(A), BC107, BC108, BC109(A/B/C), NTE123A, or ECG123A.
The TIP31 (Q3) can be replaced with a NTE196 or ECG196, but is a common type and widely available. NO suffix.

The 'Touch Plate' can be anything non corrosive. I use a silver quarter.

You can also use a small relay instead of the #53 bulb.

The phone number for DigiKey is 1-800-Digi-Key.

Back to Circuits Page

Variable Regulated Power Supply

1.2 to 30Volts @ 1.5 Amps.

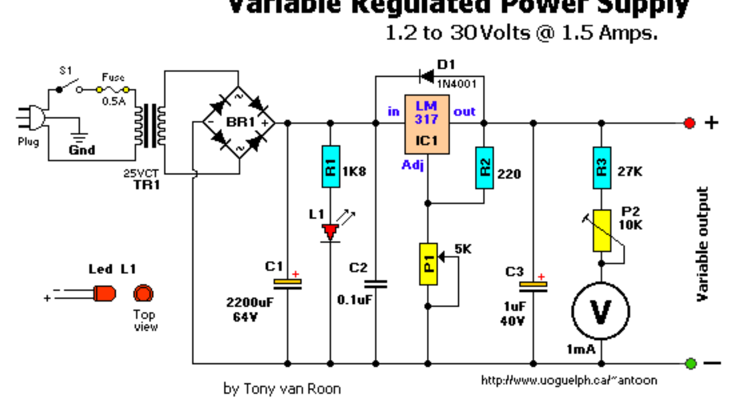

Parts List

```
BR1 = Bridge Rectifier, 100V - 3A       C1 = 2200 µF, 63V
IC1 = LM317, adjustable regulator       C2 = 0.1 µF
  V = Meter, 30V, Ri = 85 ohm           C3 = 1 µF, 40V
TR1 = Transformer, 25V, 2A            Plug = 3-wire plug & cord
 R1 = 1K8, 5%                           S1 = On-Off toggle switch
 R2 = 220 ohm, 5%                       D1 = 1N4001
 R3 = 27K, 5%                         Fuse = 110V, 500mA, slow-blow
 P1 = 5K, potentiometer               FuseHolder, wire, solder, case, knob for P1
 P2 = 10K, 10-turn trim-pot           Red & Black Banana Jacks
```

Couple Notes:

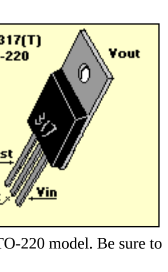

This is a simple, but low-ripple powersupply, and an excellent project if you're starting out in electronics. It will suit your needs for most of your bench testing and prototype applications. The output is adjustable from 1.2 volts to about 30 volts. Maximum current is about 1.5 amps which is also sufficient for most of your tinkering. It is relatively easy to build and can be pretty cheap if you have some or all the required parts. A printed circuit board is not included and I'm not planning on adding one since the whole thing can easily be build on perforated or vero board. Or buy one of Radio Shack/Tandy's experimenters boards (#276-150). Suit yourself. The meter and the transformer are the money suckers, but if you can scrounge them up from somewhere it will reduce the cost significantly. BR1 is a full-wave bridge rectifier. The two '~' denotes 'AC' and are connected to the 25vac output coming from the transformer. IC1 is a 3-pin, TO-220 model. Be sure to put a cooling rib on IC1, at it's max 1.5 A current it quickly becomes very hot...
Most of the parts can be obtained from your local Radio Shack or Tandy store. The physical size of the power supply case depends largely on the size of the meter &: transformer. But almost anything will do, even wood. Go wild.

Circuit Description:

The 110V-AC coming from the powercord is fed to the transformer TR1 via the on-off switch and the 500mA fuse. The 30vac output (approximately) from the transformer is presented to the BR1, the bridge-rectifier, and here rectified from AC (Alternating Current) to DC (Direct Current). If you don't want to spend the money for a Bridge Rectifier, you can easily use four general purpose 1N4004 diodes. The pulsating DC output is filtered via the 2200µF capacitor (to make it more manageable for the regulator) and fed to 'IN'-put of the adjustable LM317 regulator (IC1). The output of this regulator is your adjustable voltage of 1.2 to 30 volts varied via the 'Adj' pin and the 5K potmeter P1. The large value of C1 makes for a good, low ripple output voltage.
Why exactly 1.2V and not 0-volt? Very basic, the job of the regulator is two-fold; first, it compares the output voltage to an internal reference and controls the output voltage so that it remains constant, and second, it provides a method for adjusting the output voltage to the level you want by using a potentiometers. Internally the regulator uses a zener diode to provide a fixed reference voltage of 1.2 volt across the external resistor R2. (This resistor is usually around 240 ohms, but 220 ohms will work fine without any problems). Because of this the voltage at the output can never decrease below 1.2 volts, but as the potentiometer (P1) increases in resistance the voltage across it, due to current from the regulator plus current from R2, its voltage increases. This increases the output voltage.
D1 is a general purpose 1N4001 diode, used as a feedback blocker. It steers any current that might be coming from the device under power around the regulator to prevent the regulator from being damaged. Such reverse currents usually occur when devices are powered down.
The 'ON' Led will be lit via the 18K resistor R1. The current through the led will be between 12 - 20mA @ 2V depending on the type and color Led you are using. C2 is a 0.1µF (100nF) decoupler capacitor to filter out the transient noise which can be induced into the supply by stray magnetic fields. Under normal conditions this capacitor is only required if the regulator is far away from the filter cap, but I added it anyway. C3 improves transient response. This means that while the regulator may perform perfectly at DC and at low frequencies, (regulating the voltage regardless of the load current), at higher frequencies it may be less effective. Adding this 1 µF capacitor should improve the response at those frequencies.
R3 and the trimmer pot (P2) allows you to 'zero' your meter to a set voltage. The meter is a 30Volt type with an internal resistance of 85 ohms. I you have or obtained a meter with a different Ri (internal resistance) you will have to adjust R3 to keep the current of meter to 1mA. Just another note in regards this meter, use the reading as a guideline. The reading may or may not be off by about 0.75volts at full scale, meaning if your meter indicates 30 volts it may be in reality almost 31 volts or 29 volts. If you need a more precise voltage, then use your multimeter.

Construction:

Because of the few components you can use a small case but use whatever you have available.
I used a power cord from a computer and cut the computer end off. All computer power cords are three-prong. The ground wire, which is connected to the middle pin of the power plug is connected to the chassis. The color of the ground-wire is either green or green/yellow. It is there for your protection if the 110vac accidentally comes in contact with the supply housing (case). BE CAREFUL always to disconnect the powerplug when you working inside the chassis. If you choose to use an in-line, or clip-type fuseholder be sure to isolate it with heat shrink or something to minimize accidental touching.
I use perf-board (or Vero board) as a circuit board. This stuff is widely available and comes relatively cheap. It is either made of some sort of fiber material or Phenolic or Bakelite pcb. They all work great. Some Phenolic boards come with copper tracks already on them which will make soldering the project together easier.
I mounted the LM317(T) regulator on a heatsink. If you use a metal/aluminum case you can mount it right to the metal case, insulated with the mica insulator and the nylon washer around the mounting screw. Note that the metal tab of the LM317 is connected internally to the 'Output' pin. So it has to be insulated when mounting directly to the case. Use heat sink compound (comes in transparent or white color) on the metal tab and mica insulator to maximize proper heat transfer between LM317 and case/ or heatsink.

Drill the holes for the banana jacks, on/off switch, and LED and make the cut-out for the meter. It is best to mount everything in such a way that you are able to trouble-shoot your circuit board with ease if needed. One more note about the on-off switch S1, this switch has 110VAC power to it. After soldering, insulate the bare spots with a bit of silicon gel. Works great and prevents electrical shock through accidental touching.

If all is well, and you are finished assembling and soldering everything, check all connections. Check capacitors C1 & C3 for proper polarity (especially for C1, polarity reversal may cause explosion). Hookup a multimeter to the power supply output jacks. Set the meter for DC volts. Switch on S1 (led will light, no smoke or sparks?) and watch the meter movement. Adjust the potentiometer until it reads on your multimeter 15Volts. Adjust trimpot P2 until the meter also reads 15volts. When done, note any discrepancies between your multimeter and the power supply meter at full scale (max output). Maybe there is none, maybe there is a little, but you will be aware of it. Good luck and have fun building!

Final Note:

You can add two silicon diodes (in series) to the output of the LM317 to drop the final 1.2V, giving the full 0-30V range. I built a similar supply using the LM317, to supply a wafer coating spinner motor. The 1.2V kept the motor spinning at over 100rpm, which was unacceptable to the researcher, who needed to ramp the motor speed from 0-8krpm. This solution was provided to me by a technician from the National High Magnetic Field Laboratory. (3-04-2004, Gary Poplin)

Back to Circuits page

Wailing Alarm Siren

by Tony van Roon

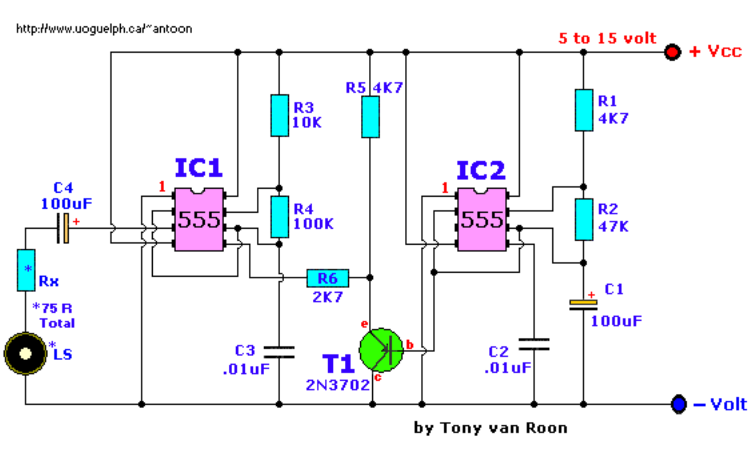

Parts List:

```
R1,R5 = 4.7K       C1,C4 = 100uF/25V, electrolytic
   R2 = 47K        C2,C3 = 0.01uF (10nF), ceramic
   R3 = 10K           T1 = 2N3702 (NTE159, TUP, etc.)
   R4 = 100K     IC1,IC2 = LM555, NE555, µA555
   Rx = *Notes        LS = Loudspeaker. *Notes
```

Notes:

This circuit provides a warbling sound to any alarm circuit. IC2 is wired as a low frequency astable with a cycle period of about 6 seconds. The slowly varying ramp waveform at C1 is fed to pnp emitter follower T1, and is then used to frequency modulate alarm generator IC1 via R6. IC1 has a natural center frequency of about 800Hz. Circuit action is such that the alarm output signal starts at a low frequency, rises for 3 seconds to a high frequency, then falls over 3 seconds to a low frequency again, and so on.

*The Loudspeaker LS and the resistor marked "Rx" should be together 75 ohms. If you have a standard 8-ohm speaker then Rx is 67 ohms. The nearest value is 68 ohms. So for a 8 ohm loudspeaker Rx is 68 ohms. For a 4 ohm loudspeaker Rx is 71 ohms, for a 25 ohm loudspeaker Rx is 50 ohms, etc, etc.

BUT, the Rx value is not very critical. It is just there as some sort of volume control. Experiment with it. C2 and C3 are 0.01uF (10nF) and a simple ceramic type will do the job. I tested the circuit at 9, 12, and 15 volt. My choice would be 9volt alkaline for battery operation or 12volt for use with a small powersupply. Output pin 3 of IC2 is NOT connected; just in case you are wondering... :-) In my prototype I used LM555 timers.

Back to Circuits Page

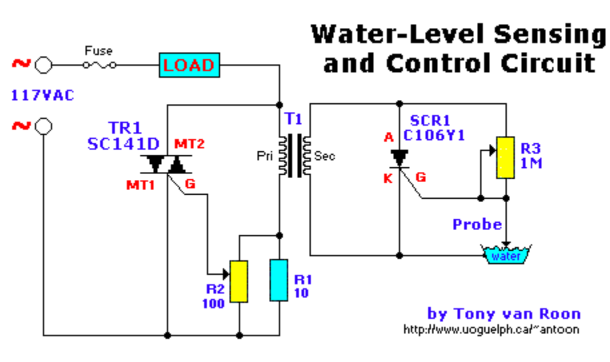

Parts List

R1 = 10 ohm, 10 watt, wirewound
R2 = 100 ohm, potentiometer, wirewound
R3 = 1 Mega-ohm potentiometer
T1 = Transformer, 12.6volt, 1.2amp (min)
SCR1 = Silicon Controlled Rectifier, C106Y1, NTE5452, or equivalent
TR1 = TRIAC, SC141D, NTE5608, or equiv., rated 6 to 10 amp at 200 to 400 volt. Case TO-220
Fuse = Slow-blow, 2 amp.

This is a simple but reliable circuit for your sump-pump, aquarium, boat, or whatever, but water only. Please be careful when working with 115Volt line voltage! Take every precaution to avoid electrical shock. Unplug the power before making changes or touching resistor R1. Murphy's Law applies to all of us!

CAUTION! This circuit is NOT suitable for use with flamable liquids!!!

A Couple Notes

Triac TR1 enegizes a load which might control a valve, indicator light, audible alarm, relais, etc. The SC141D can be substituted with NTE5608, NTE5635, or Radio Shack 276-1001 model.
When the water-level is "low", the probe is out of the water and SCR1 is triggered "on". It conducts and imposes a heavy load on Transformer T1's secundary winding. That load is reflected back into the primary, gating TR1 on which energizes the load. The C106Y1 can be substituted with a NTE5452 or Radio Shack (or Tandy) 276-1352
T1 is 12.6V not 12V. Applications of the circuit are limited only by one's imagination.
The load may vary from a watervalve, a relay controlling a pump, etc. Lots of possibilities. Value of the (slow-blow) fuse may vary depending on your load. Select your probe carefully, keeping in mind the hardness and/or pH level of the water. In either case, on occasion it will be necessary to clean your probe from contaminants.

If your country's electrical supply is 220VAC change TR1 to a 400 - 600 volt type, potentiometer R2 to 220 - 500 ohms. If you find that 500 ohms is too coarse go with 220 ohm.
Experiment with the value for wire-wound resistor R1. It can be anywhere from 5 to 47 ohms. Start with 15 ohms or so and take it from there. Feel if it gets real hot (unplug the power first!). If so, increase the value.

Back to Circuits page

Waterpump Safety Guard for Fish-pond

© by Jan Hamer

The circuit below was developed to guard the fish pond. In this case to prevent that the pump sucks just air when the waterlevel get below the pump. When the waterfilters get saturated and dirty, the water level behind the filter gets to an unacceptable level. You can see this when the pump also produces airbubbles in the water.

Because you are not all day peeking if this is the case, I connected the pump via a Solid State Relais, which acts as a power switch mounted in one of the AC wires and is controlled by the circuitry below.

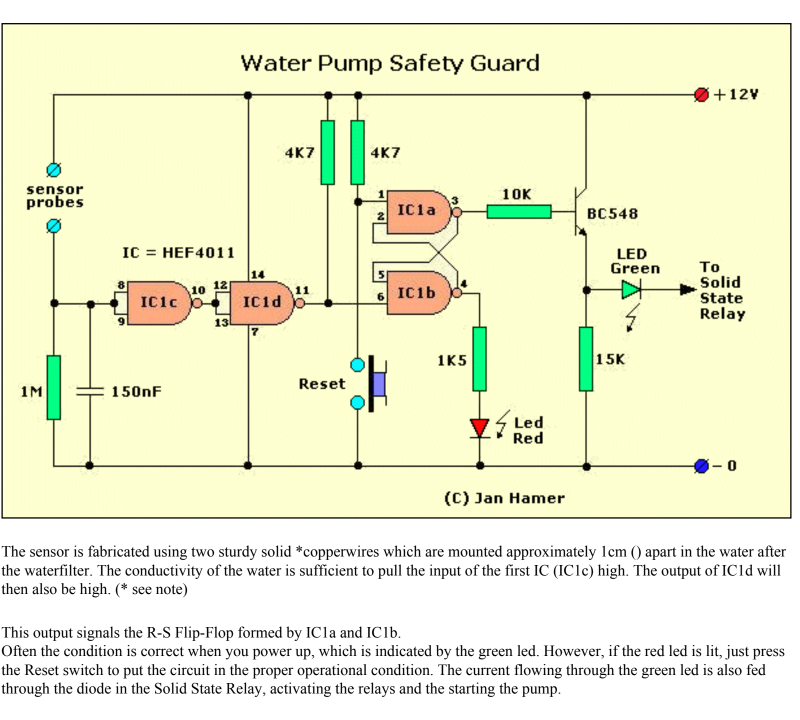

The sensor is fabricated using two sturdy solid *copperwires which are mounted approximately 1cm () apart in the water after the waterfilter. The conductivity of the water is sufficient to pull the input of the first IC (IC1c) high. The output of IC1d will then also be high. (* see note)

This output signals the R-S Flip-Flop formed by IC1a and IC1b.
Often the condition is correct when you power up, which is indicated by the green led. However, if the red led is lit, just press the Reset switch to put the circuit in the proper operational condition. The current flowing through the green led is also fed through the diode in the Solid State Relay, activating the relays and the starting the pump.

If for some reason the water level is getting low and the copper wires no longer touch the water, the input of the first IC is pulled low and consequently also the ouput of the IC behind that. The R-S Flip-Flop flips to the other condition and the green led goes out and also the pump and the red led will be lit to indicate 'something' is wrong. In this case the waterlevel.

When you're ready after the filters have been cleaned, the only you have to do is press the Reset button to activate the pump again. This way unnecessary damage to the pump is prevented.

The copper wires will need regular cleaning to make sure they conduct.

If you have questions about this circuit, please direct them to Jan Hamer or visit his website in the Netherlands (if you can read Dutch).

Published & Translated from Dutch into English with permission of Jan Hamer, The Netherlands.

Back to Circuits page

Weller WLC100 Electronic Soldering Station

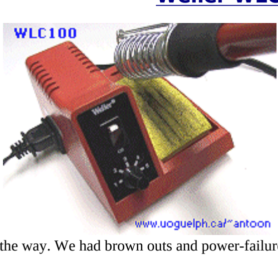

One day you switch on your soldering station. You flick the switch and the red light comes "ON", indication power is okay. Ten minutes later you get ready to solder and find the soldering pencil is not hot at all. What?! After the usual frustration period of confusion and bad words you decide to investigate and fix the problem. After all, you are a techie or technical inclined and you can fix anything.

Well, read on. I was in a similar situation and in for a 'quick-fix'; NOT! Not thinking of checking out the soldering pencil first (dumb,dumb,dumb) I started to take the one visible screw out from the bottom cover plate. The other two screws are hidden underneath the rubber feet at the left edge. As mentioned before, the circuit board is small. I pulled the knob off and unscrewed the nut holding the switch to the body. I marked the wiring on a piece of paper and took the pcb out all the way. We had brown outs and power-failures that afternoon so my first thought was a defective diac but after a quick test with the Huntron Tracker it proved to be good (see diagram below).
Okay, on to the Triac. The triac tester showed the triac capable of switching and holding its state. Also good. Finally it occurred to me to check the soldering pencil itself. Yep. Darn thing was open. Murphy's Law at work again. Could have saved myself a lot of time by thinking first instead of taking the station apart impulsively. Oh well, one lesson learned.

This station lasted about 6-years of 7-hour a-day use, so really fantastic. Power output is adjustable from 5 to 40 Watts via a potentiometer on the front panel. This station is supplied with a ST3 1/8" screwdriver tip. Seems to be suitable for almost all jobs. I was unable to order replacement parts (heater) for my older model I was forced to purchase a new station, not really expensive though, they are around $55.00 Canadian in my area so a good buy.

The WLC100 is a cheap and well build, temperature controlled, soldering station and works really well for most applications. Below I have drawn out the lay-out and pcb, and included a circuit diagram and parts list. The pcb measures about 1-7/8 by 1-inch. This document my help you in repairing your own station if the time comes.

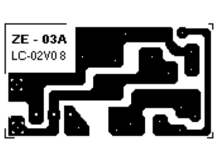

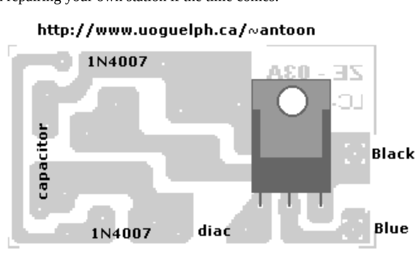

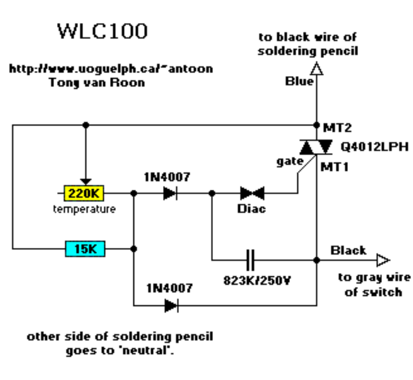

Parts List:

R1 = 15 Kilo-Ohm, brown-green-orange, 1/8 Watt, 5%
P1 = 220K potentiometer
C1 = 823K, 250V
D1,D2 = 1N4007
D3 = Diac, bilateral trigger type
Q1 = *Q4012LPH, Triac, 400V/25A, Made by Teccor

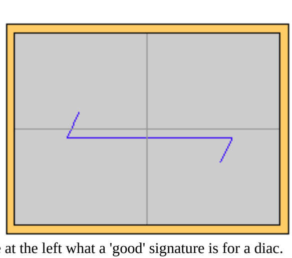

Notes: The Diac I tested with an instrument called a "Huntron Tracker". It showed okay. Look at the picture at the left what a 'good' signature is for a diac.

Newer soldering stations of the same model have now a receptacle at the left side, soldering iron plugs into here. Much easier to service this way.

***CAUTION:** The Triac has an Isolated tab, so if you need to substitute make sure to use the same type. Two replacements for the Q4012LPH are the Q4015L5 or the NTE6020.

Replacement Parts:
WCC104 - Replacement tip cleaning sponge
WPB1 - Weller® Polishing Bar
ST3 - Weller® Screwdriver Tip 1/8" (3.17mm)

Photograph by Yves Savoret.

Back to Circuits Page

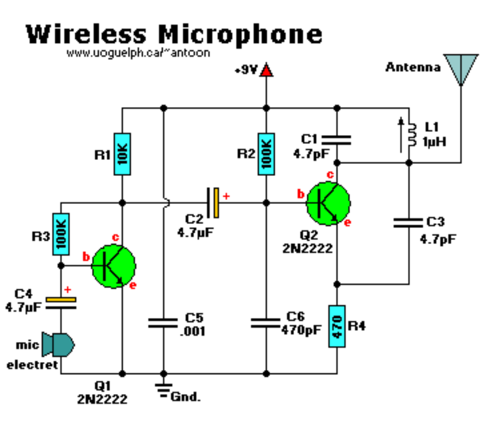

Parts List:

```
   R1 = 10K
R2,R3 =100K
   R4 = 470 ohm
C1,C3 = 4.7pF (4p7), ceramic
C2,C4 = 4.7uF-16V, electrolytic
   C5 = 0.001uF (1nF), ceramic
   C6 = 470pF, ceramic
Q1,Q2 = 2N2222, NPN transistor
   L1 = 1uH, variable inductor
```

Couple Notes:

Q1 amplifies the input signal via C4 from the electret microphone. Q2 acts as an oscillator and the signal coming off C2 is fed onto the base of Q2.
L1/C1 is a so called 'tank' circuit and operates in the 88MHz band on your regular AM/FM radio dial. L1 is a 1uH variable inductor coil to be able to tune it a little bit, and the range of 1uH is approximate.
The antenna can be as simple as a 8" (21cm) piece of wire of any kind.

1.5 Volt Tracking Transmitter

http://www.uoguelph.ca/~antoon

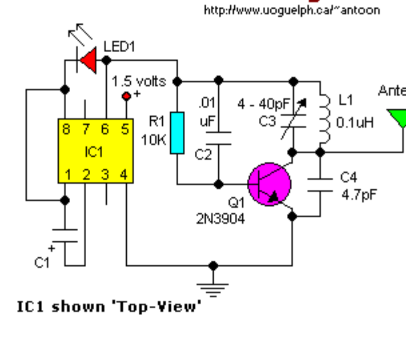

Parts List

C1= 100 uF electrolytic capacitor
C2 = .01uF disc capacitor
C3 = 4 to 40 pF trimmer capacitor
C4 = 4.7 pF disc capacitor
L1 = 0.1 uH, 6 to 8 turns of 22 gauge hookup wire close wound around a 1/4" diameter non-conductive core, such as a pencil.
IC1 = LM3909 LED flasher
LED1 = red LED
Q1 = 2N3904 NPN silicon transistor
R1 = 10K
Antenna = 10 to 12 inches of hookup wire.

Additional Notes

o For stability, use a NPO types for C2 & C4.
o Resistance tolerance for R1 should be 1 or 2%.
o Frequency range is the usual 87-109Mhz on the FM dial.
o The coil is made from 22 ga 'hookup' wire, like the solid Bell phone wire. Leave the insulation on.
o The LED is the 'High Brightness' type for maximum illumination, although this type will draw more current.

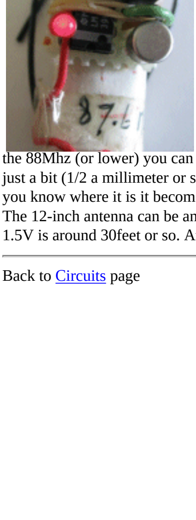

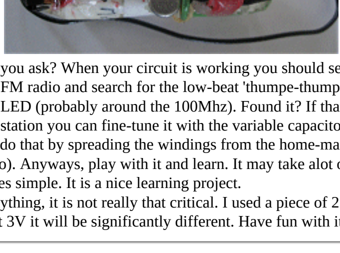

The current draw for this tracker is 3.7mA, so the 1.5V button cell will last awhile. My experimental version was tuned to 87.6MHz and worked as expected on only 1.5 volts. The photo shows I just glued the whole thing on a 1.5V AA battery. The led glows at the same oscillation as the beat-frequency

What the heck am I suppose to hear you ask? When your circuit is working you should see the LED flash quite fast. Take your FM radio and search for the low-beat 'thumpe-thumpe-thumpe-etc' equal to the flash of the LED (probably around the 100Mhz). Found it? If that position is interfering with a radio station you can fine-tune it with the variable capacitor. If you like to have the tracker around the 88Mhz (or lower) you can do that by spreading the windings from the home-made coil
just a bit (1/2 a millimeter or so). Anyways, play with it and learn. It may take alot of patience to find the signal but once you know where it is it becomes simple. It is a nice learning project.
The 12-inch antenna can be anything, it is not really that critical. I used a piece of 22 gauge flexible wire. The range at 1.5V is around 30feet or so. At 3V it will be significantly different. Have fun with it. -Tony

---

Back to Circuits page

4-Transistor Tracking Transmitter

http://www.uoguelph.ca/~antoon

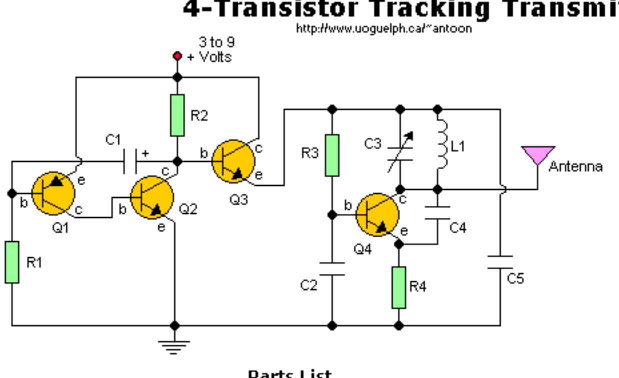

Parts List

C1 = 4.7 uF electrolytic cap
C2 = .001 uF disc cap
C3 = 10 to 40 pF trimmer cap
C4 = 4.7 pF disc cap
C5 = .001 uF disc cap

Q1 = 2N3906 PNP transistor
Q2, Q3, Q4 = 2N3904 NPN transistor
L1 = 4 to 5 turns of 22 ga. magnet wire close wound around 1/8" non-conductive core.

R1 = 100 K
R2 = 10 ohms
R3 = 47 K
R4 = 220 ohms
Antenna = 10 to 12" hookup wire.

Back to Circuits page

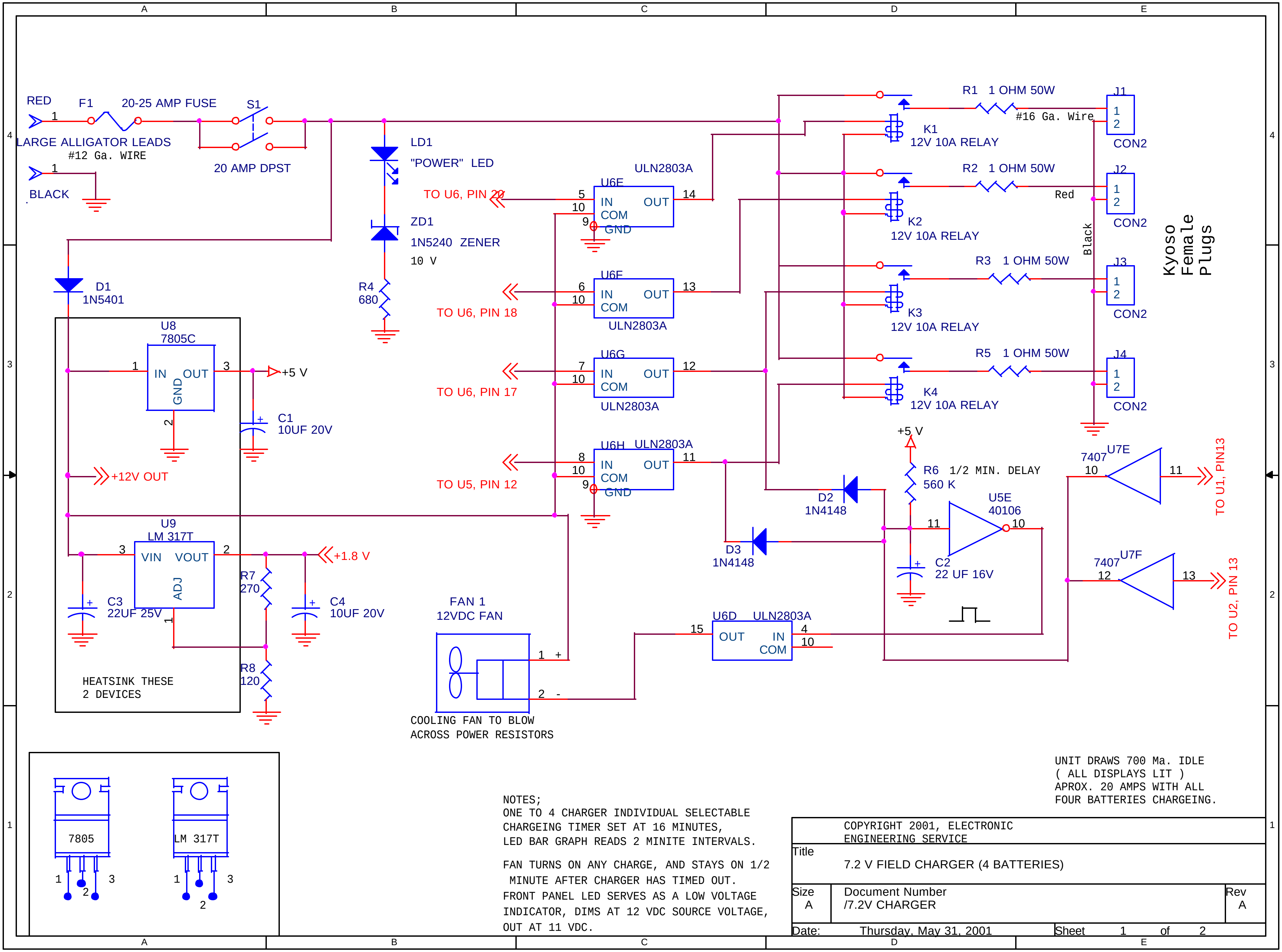

UNIT DRAWS 700 Ma. IDLE
(ALL DISPLAYS LIT)
APROX. 20 AMPS WITH ALL
FOUR BATTERIES CHARGEING.

NOTES;
ONE TO 4 CHARGER INDIVIDUAL SELECTABLE
CHARGEING TIMER SET AT 16 MINUTES,
LED BAR GRAPH READS 2 MINITE INTERVALS.

FAN TURNS ON ANY CHARGE, AND STAYS ON 1/2
MINUTE AFTER CHARGER HAS TIMED OUT.
FRONT PANEL LED SERVES AS A LOW VOLTAGE
INDICATOR, DIMS AT 12 VDC SOURCE VOLTAGE,
OUT AT 11 VDC.

Title	7.2 V FIELD CHARGER (4 BATTERIES)	
Size A	Document Number /7.2V CHARGER	Rev A
Date: Thursday, May 31, 2001	Sheet 1 of 2	

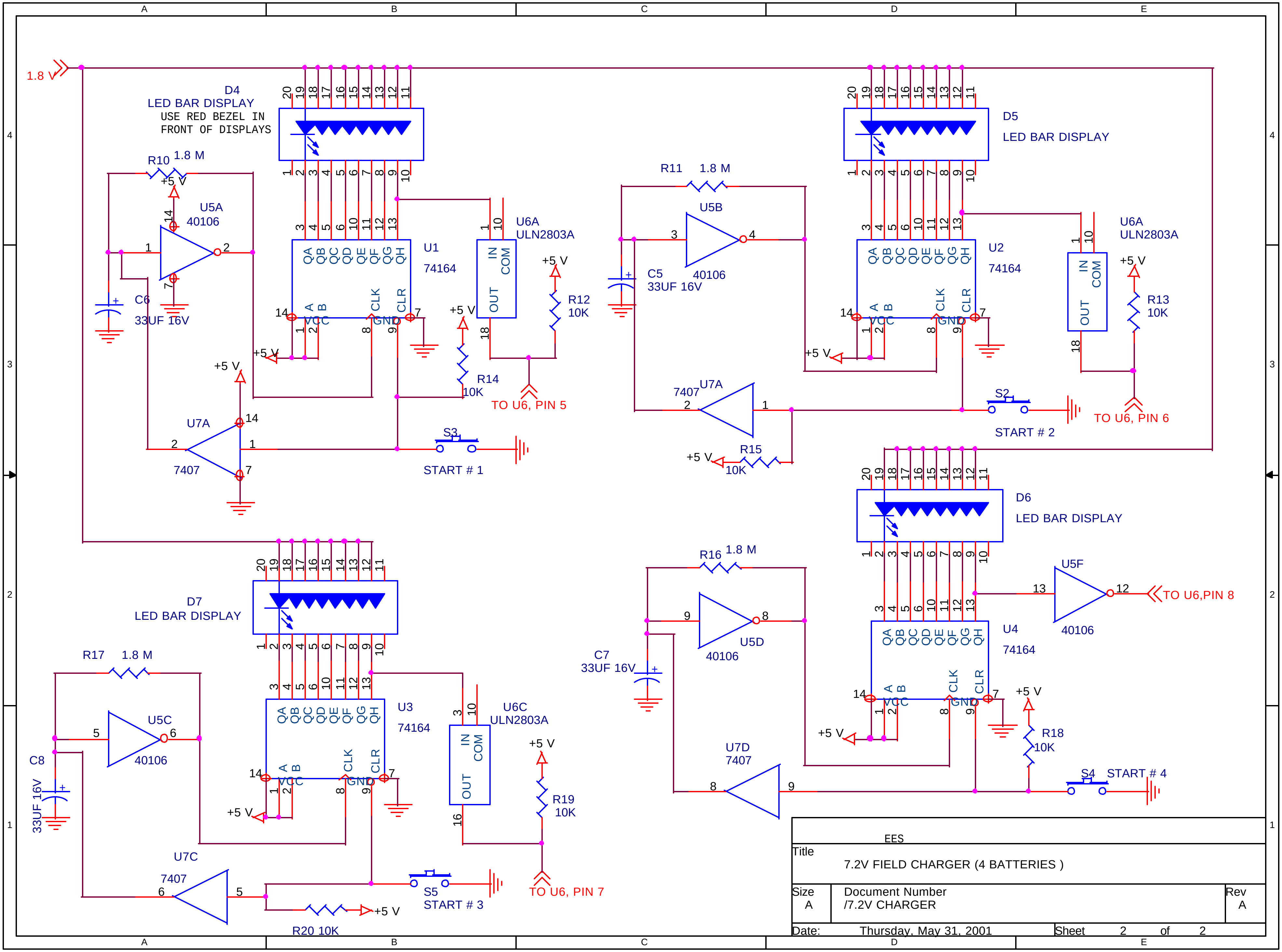
1.8 V
D4
LED BAR DISPLAY
USE RED BEZEL IN
FRONT OF DISPLAYS
R10 1.8 M
U5A
40106
C6
33UF 16V
U1
74164
U6A
ULN2803A
R12
10K
R14
10K
TO U6, PIN 5
U7A
7407
S3
START # 1
D5
LED BAR DISPLAY
R11 1.8 M
U5B
40106
C5
33UF 16V
U2
74164
R13
10K
S2
START # 2
TO U6, PIN 6
R15
10K
D6
LED BAR DISPLAY
R16 1.8 M
U5D
40106
C7
33UF 16V
U5F
40106
TO U6,PIN 8
U4
74164
R18
10K
U7D
7407
S4
START # 4
D7
LED BAR DISPLAY
R17 1.8 M
U5C
40106
C8
33UF 16V
U3
74164
U6C
ULN2803A
R19
10K
TO U6, PIN 7
U7C
7407
S5
START # 3
R20 10K
+5 V
EES
Title
7.2V FIELD CHARGER (4 BATTERIES)
Size
A
Document Number
/7.2V CHARGER
Rev
A
Date: Thursday, May 31, 2001
Sheet 2 of 2

7.2 V FIELD CHARGER (4 BATTERIES) Revised: Thursday, May 31, 2001
/7.2V CHARGER Revision: A

Bill Of Materials May 31,2001 9:53:53 Page1

Item	Quantity	Reference	Part
1	1	RED BEZEL PLASTIC (FOR LED 4 DISPLAYS)	
2	2	C4,C1	10UF 20V
3	1	C2	22 UF 16V
4	1	C3	22UF 25V
5	4	C5,C6,C7,C8	33UF 16V
6	1	D1	1N5401 3A DIODE
7	2	D2,D3	1N4148 DIODE
8	4	D4,D5,D6,D7	LED BAR DISPLAY
9	1	FAN 1	SMALL 12VDC FAN
10	1	F1	20-25 AMP FUSE
11	4	J1,J2,J3,J4	KYOSHO CONN.
12	4	K1,K2,K3,K4	12V 10A RELAY
13	1	LD1	"POWER" .2" LED
14	1	RED	LARGE ALLIGATOR LEAD
15	4	R1,R2,R3,R5	1 OHM 50W
16	1	R4	680 OHM
17	1	R6	560 K
18	1	R7	270 OHM
19	1	R8	120 OHM
20	4	R10,R11,R16,R17	1.8 M
21	7	R12,R13,R14,R15,R18,R19, R20	10K
22	1	S1	20 AMP DPST
23	1	S2 S2 S3 S4	MOMENTARY CONTACT SWITCH
24	1	PANEL MOUNT LED HOLDER	
25	1	FAN FINGER GUARD	
26	1	FRONT PANEL FUSE HOLDER	
27	4	U1,U2,U3,U4	74164 I.C.
28	1	U5	40106 I.C.
29	1	U6	ULN2803A I.C.
30	1	U7	7407 I.C.
31	1	U8	7805C REG.
32	1	U9	LM 317T REG.
33	1	ZD1	1N5240 ZENER
34	1	3/8" GROMMET	
35	4	1/4" GROMMET	

This charger was designed by me in 1 to fill a need that I had. This was I had two R.C. model boats that needed batteries each and I needed to charge them simultaneously, from my car battery. I could not find a commercial unit to do this, so came up with a neat project to fill the bill. ayout was done on a proto-boards, one lays flat, and the other vertical for the bar graph displays. The displays a need red filter in front of them.
The unit is novel as it s display graph shows you the time the battery has been charging in minute intervals up to 1 minutes when finished.
The power led indicates source voltage as it dims, and goes out at 11 vdc, this is needed because the unit draws amps fully charging batteries as you will need to run your engine or you will walk home The d.c. fan needs to be situated as to force air across the power resistors, the fan has a circuit to turn off minute after the unit quits charging. Heat sink the two regulators ( ) to the metal case also. All of the parts are easy to get, most available at radio shack, allied, or digi-key
ood luck and happy charging,
ave .

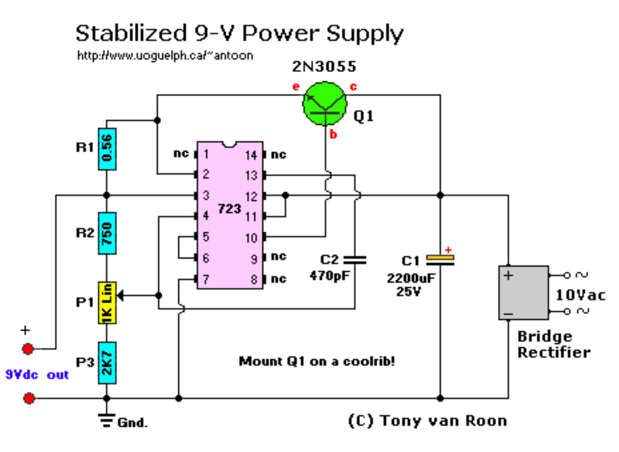

Parts List:

```
 T1 = 115/10 VAC transformer. Center Tap not needed.
IC1 = µA723, LM723, or equivalent.
 Q1 = 2N3055, NTE130, or substitute. (TO-3 case) Mount on a coolrib!
BR1 = 40V-5A
 R1 = 0.56 Ohm, 1 Watt, 5%
 R2 = 750 Ohm, 5%
 R3 = 2K7 (2700 ohm)
 P1 = potentiometer, 1K, Linear
 C1 = 2200uF, 25V
 C2 = 470pF
```

Notes:

C1 filters the noise and spikes off the ac. Adjust the circuit for 9 V output voltage with the P1 potentiometer.

Back to Circuits page

Nullmodem (9-9) Cable

9-pin to 9-pin female

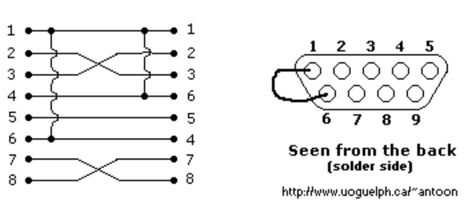

Signal Description

1 Carrier Detect
2 Receive Data
3 Transmit Data
4 Data Terminal Ready
5 System Ground
6 Data Set Ready
7 Request to Send
8 Clear to Send

Pins 6 & 1 are wired together to similute 'on-line' status. This Nullmodem configuration is also for gameply like Westwood's Command & Conquerer "Tiberian Sun".

Back to Circuits Menu page

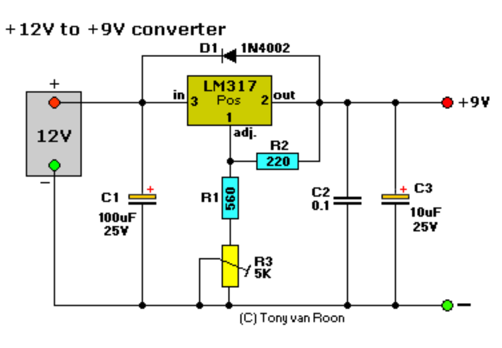

This little circuit uses a LM317 variable voltage regulator to adjust the input voltage down to +9 volt, or whatever else you need. Just a solid basic circuit without bells and whistles.
You can do with a 10µF capacitor for C1 if your battery is close to this circuit. If it is located more than 3 feet increase the value to 100µF or above. Without a coolrib it can easily handle 500mA. If you need more, or the maximum current (1.5A), then a good coolrib is required. It can even provide up to 2 amps with a good coolrib and a fan.

Trimmer potentiometer R3 will vary the output voltage. Ceramic capacitor C2 improves frequency/transient response. Can be omitted if not needed for your application.
If you want extra protection in case the adjust pin is short circuited, add an extra 1N4001 diode between pin 1 and the output. Cathode to output. But normally only used if the output is about 25V.

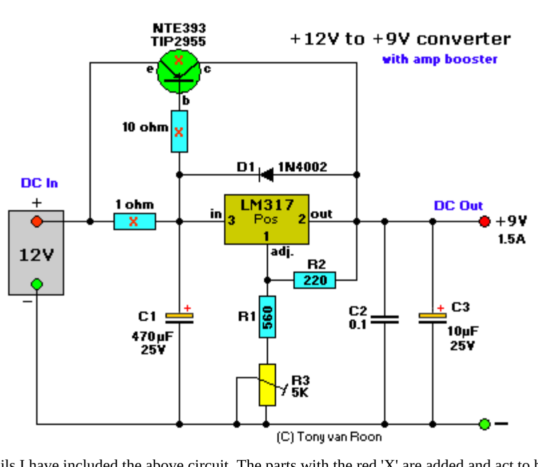

After dozens of emails I have included the above circuit. The parts with the red 'X' are added and act to boost the amperage. The NTE393 transistor can handle 25A with a sufficient coolrib.
Other power transistors, such as the TIP2955, or similar can be used also. The power transistor is used to boost the extra needed current above the maximum alowable current provided via the regulator. Current up to 1500mA(1.5A) will flow through the regulator, anything above that makes the regulator conduct and adding the extra needed current to the output load.
It is no problem stacking power transistors for even more current. Both regulator and power transistor **must** be mounted on an adequate heatsink, and if you intend to use lots of amps a fan would be nice too.

Back to Circuits Page.

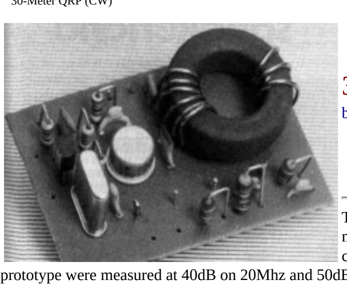

30-Meter QRP (CW)

by P. Wyns, ON7WP (Belgium)

This transmitters' intended purpose is for morse-code only in the 30 meter band (10Mhz). It is a low-power QRP type and needs to be connected to your existing tranceiver. The harmonic rejections on the prototype were measured at 40dB on 20Mhz and 50dB on 30Mhz.

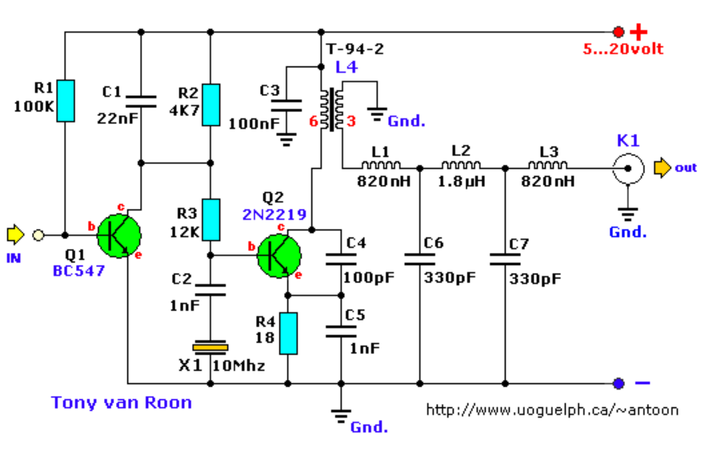

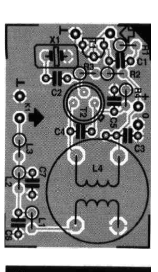

Component Layout.

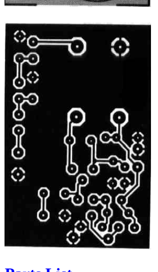

1-5/16" x 2" (34mm x 52mm) double-sided.

Parts List

```
  R1 = 100K       C1 = 22nF   L1,L3 = 820nH           BNC connector
  R2 = 4K7     C2,C5 = 1nF       L2 = 1.8µH           Coolrib for Q2
  R3 = 12K        C3 = 100nF     L4 = T-94-2 (Amidon) Morse-key, single pole
  R4 = 18 Ohm     C4 = 100pF     Q1 = BC547           All-metal case
xtal = 10Mhz   C6,C7 = 330pF     Q2 = 2N2219(A)
```

Additional Notes

The transmitter is build as a Colpitts Oscillator with a strong 2N2219(A) transistor. HF-output of the oscillator is 100 to 500 mW, depending on the supply voltage of 5 to 20 Volts. The transmit frequency is stabilized with the 10Mhz crystal. A slight detuning is possible by putting a 150pF trimmer capacitor between C2 and the xtal. The oscillator signal is taken from the collector of Q2 by induction and via a low-feedthrough filter and guided to the output. This particular filter is called "Chebychev" and uses standard E12 type values. The oscillator is keyed by Q1, which biases as long as the morse-key is open and the base of Q1 is at ground level. By keying the morse-key Q1 is blocked and allows Q2 to freely oscillate. For best results, use the double sided pcb as shown above. Coil L4 exists of Primary 6 turns and secundary 3 turns of 0.5mm magnet wire on a Amidon T-94-2 donut. Outside diameter is 24 mm and inside diameter is 14mm; the A(l) value is 84µH per 100 turns and permeability of 10. Q2 needs a coolrib! The whole circuit needs to be mounted in an all-metal/aluminum case. If you're unable to obtain an all-metal case, then use a roll of self-sticking aluminum tape (available from your hardware store), just make sure that all individual pieces of aluminum-tape are conducting with each other. Works fine. Don't forget the coolrib on T2.

Back to Circuits page

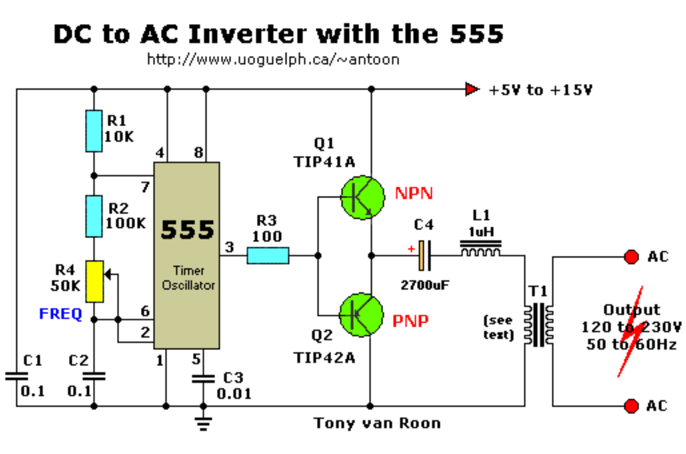

Error fix: Pin 2 and 7 were reversed. Thanks Ken Kubick!

Parts List:

```
   R1 = 10K
   R2 = 100K
   R3 = 100 ohm
   R4 = 50K potmeter, Lin
C1,C2 = 0.1µF
   C3 = 0.01µF
   C4 = 2700µF
   Q1 = TIP41A, NPN
   Q2 = TIP42A, PNP
   L1 = 1µH
   T1 = Filament transformer, your choice
```

This DC-to-AC inverter schematic produces an AC output at line frequency and voltage. The 555 is configured as a low-frequency oscillator, tunable over the frequency range of 50 to 60 Hz by Frequency potentiometer R4.
The 555 feeds its output (amplified by Q1 and Q2) to the input of transformer T1, a reverse-connected filament transformer with the necessary step-up turns ratio. Capacitor C4 and coil L1 filter the input to T1, assuring that it is effectively a sine wave. Adjust the value of T1 to your voltage.

The output (in watts) is up to you by selecting different components. Input voltage is anywhere from +5V to +15Volt DC, adjust the 2700µF cap's working voltage accordingly.
Replacement types for Q1 are: TIP41B, TIP41C, NTE196, ECG196, etc. Replacement types for Q2 are: TIP42B, TIP42C, NTE197, ECG197, etc. Don't be afraid to use another type of ***similar specs,*** it's only a transistor... ;-)

If the whole thing is working, good. If not, relax and don't get frustrated. Do the following checks:
1) You have connected the filament transformer in REVERSE yes?
2) If not, disconnect the power and reverse. If you have, disconnect the transformer and measure the voltage after L1 and ground.
3) Just in case, *GROUND* for this circuit is same as negative (-).
4) Q1/Q2 are oposites, e.i. npn/pnp.
5) Is your 555 perhaps defective? Disconnect R3 from pin 3 and check pin 3 for a pulse.
6) Check your transistors to make sure they are not defective.

Back to Circuits page

555 Timer/Oscillator Tester

by Tony van Roon

Description 555 Tester:
The 555-tester above is basically a led flasher circuit but with the 555 removed. Imagen the output being a square-wave pulse with a high and low pulse, and is so indicated by the two leds, one 'Hi' and the other one 'Lo'. When you have a good 555 under test, the hi and lo leds are flashing steadily. If you have a defective 555 you may get both leds off, one or both on steady, or one or both on faintly. In all these case the 555 is defective. Oh yeah, just in case you are just starting out in electronics; do NOT insert a 555 (or take it out) with the power on. The flash-rate can be changed with different values for C1 and R2. Try it, its fun. At pin 5 there is a small ceramic 10nF capacitor. It is just there to filter out any noise and is optional. Experiment with leaving C2 out. C2 can be a value of 0.001 to 0.01µF, but the latter is the most common value. The datasheet for the 555 documention specifies to use a general purpose ceramic 0.01µF capacitor.

Read the **555 Timer/Oscillator Tutorial** for more information of the pin functions.
In regards to R3 and R4; depending on your Led type; start with 220 ohm and go up or down from 100 to 330 ohms, again, depending on your Led (e.i. regular, high, ultra bright, 2mm, 3mm, 5mm, etc.). The prototype was constructed with as few parts in mind as posible. In that regards you could save money by replacing the two leds with a bi-color (3 legs) one if you have a unit in your junkbox somewhere; it will then flash green/red. The second unit was smaller, but the third unit I build was so small it was about 2 x 1 x 1/2 inch and fitted nicely in my pocket.

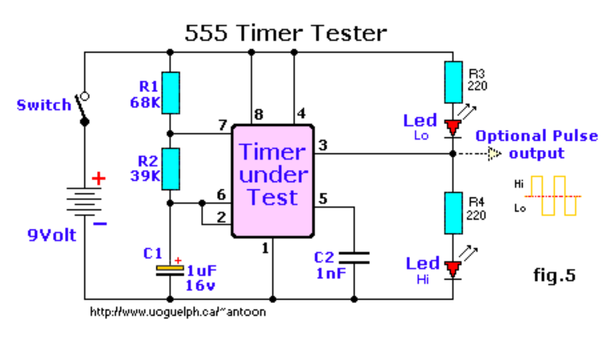

Parts List:
R1 = 68K, 5%
R2 = 39K, 5%
R3 = 100 to 330 ohm depending on LED
R4 = Same as R3
C1 = 1µF, 16V
C2 = 0.01µF ceramic (see text)
Two led's, red or green.
8-pin dip socket
On-off switch or momentary 'push=on' switch
Solderless breadboard: Radio Shack #276-175, or vero-board

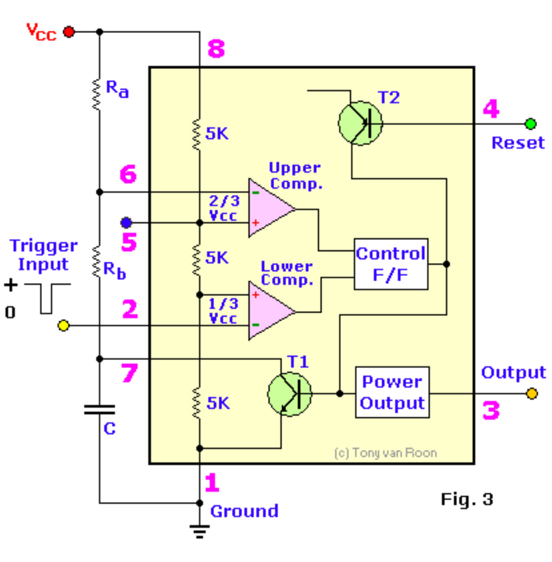

Description 555 Timer/Oscillator:
Have a look at the block diagram above. To make the 555 work, a trigger pulse at pin 2 initially sets the 555's internal flip-flop 'on'. It does so by comparing the input pulse to 1/3 of the supply power to a second comparator. This turns off the transistor across the timing capacitor and allows the timing capacitor to start the charge cycle. The 555 stays 'on' until this timing cycle turns it 'off' again by resetting the control flip-flop.
The timing cycle can be made to start over again by applying a pulse to pin 4 (reset). This turns on the transistor that discharges the timing capacitor, and so delaying the charge from reaching 2/3 Vcc.
In some applications, the reset (pin 4) is connected to the trigger input (pin 2) so that each new input trigger signal restarts the timing cycle.
When the threshold at pin 2 drops, at the end of a timing cycle, that voltage drop can be used to start a new timing cycle right away by connecting pin 6 (threshold) to pin 2, the trigger input. This type of system is called an "astable, free running, oscillator" and is the most common one. If you look at a variety of diagrams where a 555 is used you notice that in most cases pins 2 and 6 are connected.
The 555's output circuit includes two high current transistors, each capable of handling at least 200mA. One transistor is connected between the output pin 3 and Vcc, and the other between pin 3 and ground. This way you can use the output pin 3 to either supply Vcc to your load (source) or provide a ground for your load (sink). If you have heard mentioning about 'sink' or 'source' this is exactly what it means. This tester will flash the led's alternately with good 555 under test, because both led's are driven from the single output pin 3 because of the way the 555 is designed. What an awsome chip!

If you wish to learn more about the 555 Timer/Oscillator, I invite you to read the 555 Timer/Oscillator tutorial.

Back to Circuits or R/C Gadgets Page

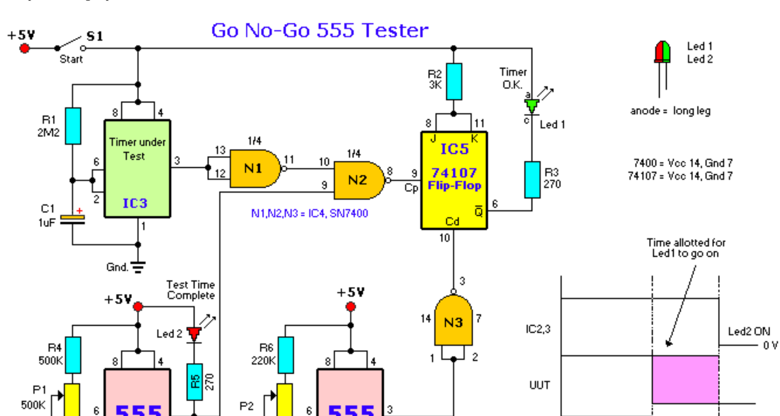

Parts List

```
   R1 = 2M2      IC1,IC2,IC3 = 555 Timer/Oscillator
   R2 = 3K               IC4 = SN7400
R3,R5 = 270 ohm          IC5 = SN74107
   R4 = 500K       Led1,Led2 = 5mm, Red/Green, high brightness
   R6 = 220K              S1 = On-Off switch, push button
P1,P2 = 500K, Trimpots
   C1 = 1µF, 10V
C2,C3 = 4µF, 10V
```

Description:
This is a more advanced unit with a precise timed testing procedure.

R1 (2M2) is same as 2.2 MegOhm.
The two timers determine the allowable accuracy for the timer IC under test. Potentiometers P1 and P2 permit ready adjustment for the desired range.
With power applied, all timers switch to the high state and begin their cycles. The output of IC1 inhibits the flip-flop for the interval T1. At T2, the output of IC2 goes low and inhibits any signal from the timer under test. The period between T1 and T2 is the time alloted for IC3, the timer under test, to complete its cycle and produce a low output. Only during this time can a high-to-low transition from IC3 trigger the Flip-Flop IC5 so that Led 1 (timer ok), which indicates a good IC, lights up. Led 2 lights up when the test is completed.

Although there can be a few milliseconds of contact bounce when S1 is first closed, thereby causing a delay in capacitor charging, the delay appears across all of the IC's. But since the ratio of delay times among all three timers is the same, the effect on test accuracy is nil.

How you get to the 5 volt supply power is up to you. Supply power should be between 4.5V (min) and 5.5 (max). Probably three 1.5V alkalines will total about 4.8V because they are never exactly 1.5 V but always between 1.56 and 1.59V or so, and will do the job until the voltage drops below 4.5V. A simple stabilized 5V power supply would be better choice, or use a 5 volt regulator with a 9 volt battery, works also. Do not forget to connect power to the 7400 and 74101 IC's (see circuit diagram). Standard procedure is that if they are not drawn, they are assumed. You can get the LS types (low schottky) which draw less current.
At this time I'm bench testing the cmos types.

Note: While bench testing I found that older timers like the µA555 and the MC1455, although good, were difficult to test. I tried extending the testing period (in seconds) by adjusting trimpot P2 and got an ok from led2 for the MC1455 but no such luck with the µA555. The LM555 and NE555 testing were excellent. I will test a couple more, including the cmos versions, and post my findings here. If I can find the time I will modify the power supply for use with a regular 9 volt battery instead of the bit ackward 5 volt supply...

Read the **555 Timer/Oscillator Tutorial** for more information of the pin functions.

Back to Circuits or R/C Gadgets Page

My Electronic Icons Template for Paint Shop Pro

Over the past 10 years or so I have created all sorts of symbols and icons and keep them in a template from which I copy-and-paste whatever I need to create a circuit diagram. I decided to share this template with anyone interested in creating beautiful and easy to read schematic diagrams, just to keep our declining hobby alive. For ease of use, and you may have noticed, **all my circuits are in .gif format and 256-colors palet.** It is important to keep reading...

Right near 'IC1' (right lower corner) you will see this 'block-of-colors': Click on it to see an enlarged picture. You probably wonder why it is there, and what it does. Well, it is a trick I use to maintain a full palet of colors after the circuit diagram is saved in gif format to ensure that, whenever I have/want to change something in the diagram I still have a full palet of colors. Without this color-block the .gif file only saves whatever colors are used in a new palet. Try it, you will see it works. You can add your own colors to the color-bar, one pixel will be enough, just make sure they come from the 256-color palet.

All my schematics are drawn in 256-color format and so the color-block. More colors are not needed and keeps a lid on the size of gif files you draw. Keep this in mind. Trying to use my template with anything more than 256 colors will result in distorted colors when you zoom in and have a close look at the symbols. When you open a 'new' file in Paint Shop Pro or any other drawing program, set the parameters to 256-colors (8-bit) and you be fine. Then one of the first symbols to copy-and-paste is the color-block (or color-bar). Save the new file and when you're all done with the new drawing save it, cut the color bar and save again. The palet colors will now always be there for future enhancements. **If you have questions about a symbol or icon you can reach me in the Message Forum of the main page.**

One more thing, color cartridges for printers are expensive. Try to remember that when you create your schematics. I'm not referring to the colored electronic icons but rather too much color used in text or background. It is best to keep the background of your drawings white. I have made the same mistakes and learned my lessons. Now, whenever I have to update a diagram I try to scale back the color usage. Every bit helps.
Since I created the symbols (except the bulbs) and know how to use all of them, I never bothered to put a name with it. I found it would just clutter up my **"parts.gif"** template (as I call it).

Well, that's it I guess. Click here: **[Parts Template]** to save a copy of my template to your harddrive and start using it. If I have a new icon to add I will let everyone know. Vice-versa, If you created a nice looking icon and wish to share, let me know and I will add it to the template. The "parts.gif" file is a bit wider then the screen and so it looks like it is squeezed a bit. Don't worry about it, it'll be fine. When you see the pic, richt-click on it to save a copy.

One more thing--you are NOT allowed to feature my template on your website, it is for your personal use only. I have a good lawyer and all copyright violations will be pursued.

Have fun creating beautiful and eye pleasing schematics, and again, share your icons. Cheers! --Tony van Roon

---

Back to Circuits page

Last updated October 25, 2004

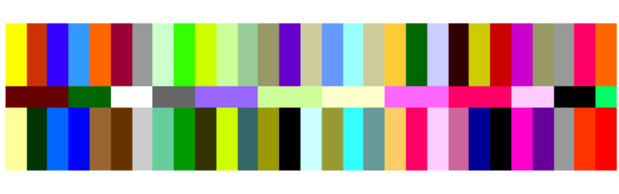

Electronic Component Template

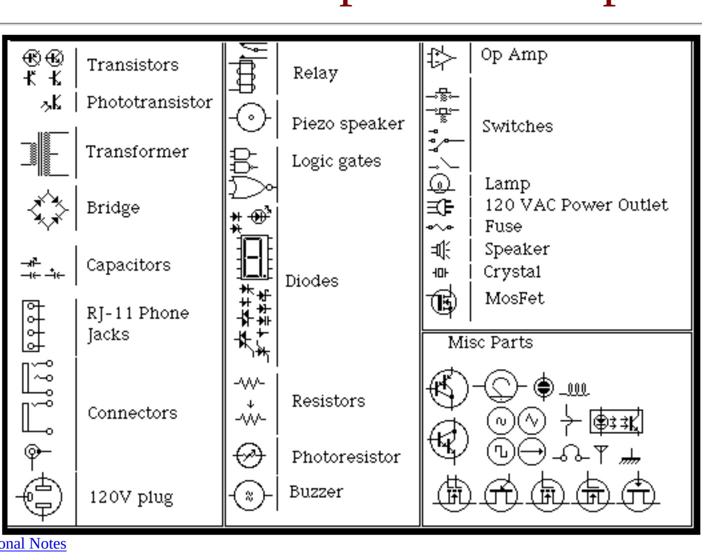

Additional Notes
(N/A)

Back to Circuits page

Archived, older circuits

Some are working, others are not. That's why they are here, either non-working or obsolete. But they may still be of use either as example circuits or perhaps you can use snippets of the diagrams. Whatever. Use at your own risk. There is NO SUPPORT for any of these circuits.

Basic IC MonoStable Multivibrator
Basic RF Oscillator #1
Birdie Doorbell Ringer - Audio transformer sometimes difficult to obtain
'Bug' Detector with Beep
Gel Cell Charger, I - No time to figure out the problems...
Inverter - 12V-DC to 115V-AC. updated 1-15-2004
Micro-Spy with FETs - 70's
Micro-Spy with USW - 70's
Micro-Spy with TTL - 70's
Miniature FM Transmitter #1
Miniature FM Transmitter #2
Miniature FM Transmitter #3
Servo Tester #1 - Working. Not bad; I will revamp this one.
Servo Tester #4 - Working, but not to my satisfaction
Servo Tester #5 - Working, but not to my satisfaction
Simplest R/C Circuit
Simplest RF Transmitter

Back to Circuits Page

Last Updated: January 15, 2004

Basic IC MonoStable Multivibrator

by Tony van Roon

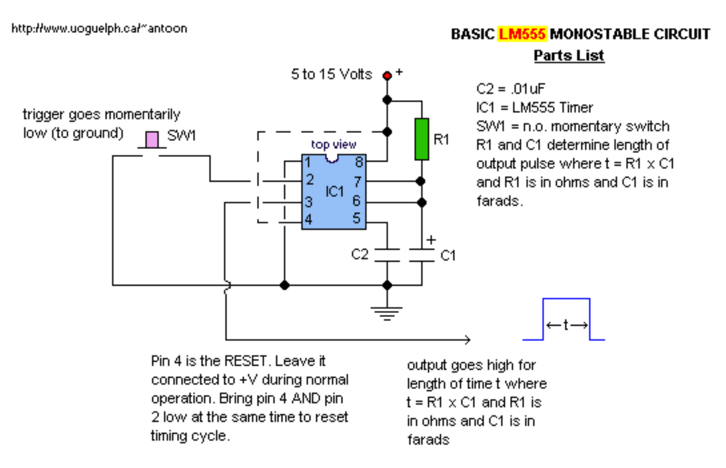

Back to Circuits page

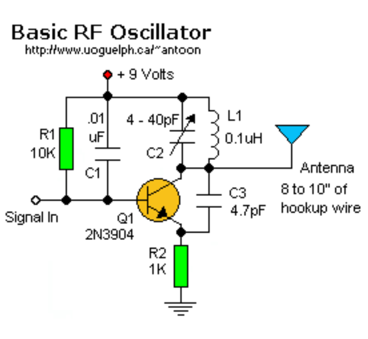

This basic circuit is easy to build and the components are not critical. Most of them can be found in your junk parts box. The L1 antenna coil can be made by close winding 8 to 10 turns of 22 gauge insulated hookup wire around a 1/4 inch form such as a pencil. You can experiment with the size of the coil and the number of turns to see how it affects the frequency and signal output of the oscillator. You should be able to pick up its signal with a standard FM radio receiver. The "Signal in" should be coupled by a disc capacitor of about 0.1uF to the stage in front of it.

Back to Circuits page

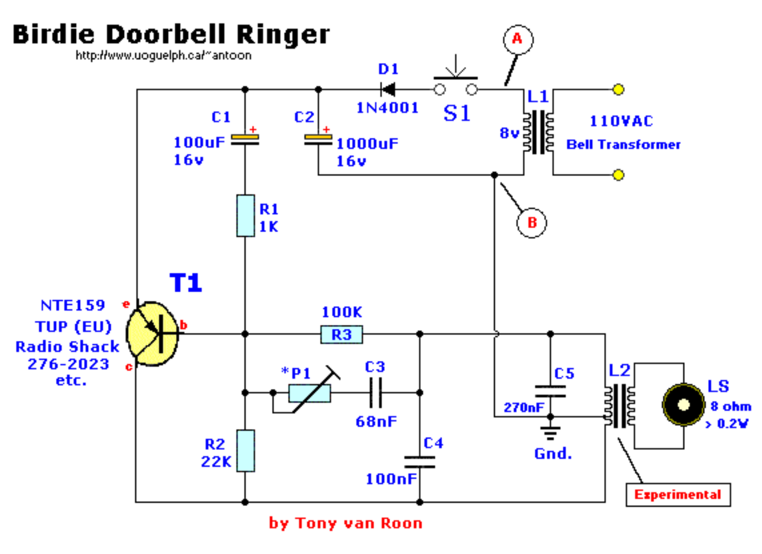

Notes

P1 is of experimental value. Start with 220 Ohms or so and modify to suit your needs. The transistor is a general purpose kind and is not critical, almost any pnp type will work. L1 is a bell-transformer which is usually already present in the house. If you wish, you could use a battery instead of the bell transformer. Just hookup a 9-volt battery to points 'A' and 'B' (A=+) the diode (D1) is to protect the circuit from accidental polarity reversal and is optional, but required for use with the bell transformer.

T1 is a General Purpose PNP transistor and probably anything will work. L2 comes out of an old am transistor radio. They look like miniature transformers and are usually colored red or green. You have to fiddle with different transformers as the sound can vary depending on the value. The loudspeaker is a 8 Ohm type and must be larger than 200milli-Watt. I used a 2Watt type, but anything over 0.2W will do. It really sounds like a bird and when you release the doorbell button the sound slowly fades away. I have used this circuit in my house for over 20 years and even build the "Birdie" for others. Although an old circuit, the experimentation and the final results still give a punch. Remember to Have fun!

Back to Circuits Page

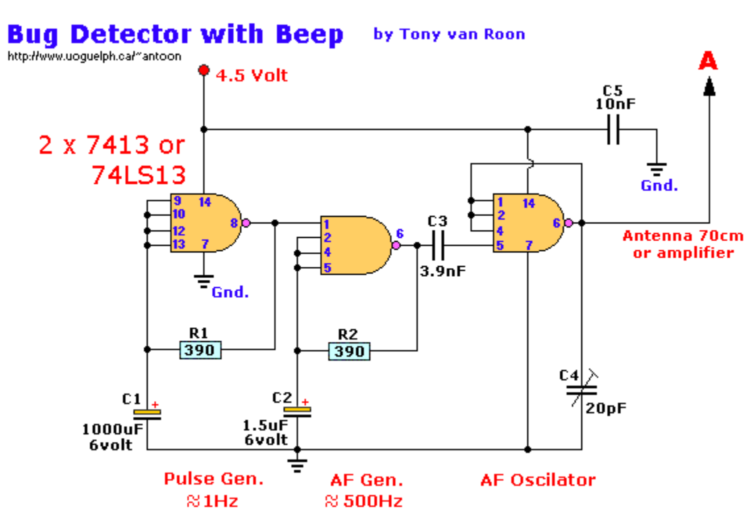

Parts List

R1 = 390 ohm, 5%
R2 = 390 ohm, 5%
C1 = 1000uF, 6V
C2 = 1.5uF, 6V
C3 = 3.9nF
C4 = 20pF, trimmer
C5 = 10nF (0.01uF)
IC = SN7413 or SN74LS13 (2)

Please note: This circuit is not open for discussion. Although working perfectly, it was experimental. I will answer no emails in regards to this circuit.

Back to Circuits page

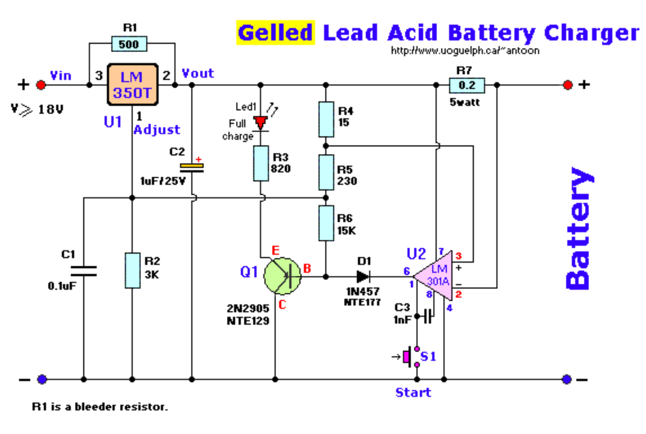

Parts List:

All resistors are carbon, 1/4 watt, 5% tolerance, unless otherwise indicated.

```
R1 = 500 ohm            C1 = 0.1µF (100nF), ceramic      U1 = LM350T
R2 = 3K                 C2 = 1µF/25 volt                 U2 = LM301A
R3 = 820 ohm            C3 = 1000pF (1nF), ceramic       S1 = Pushbutton switch (normally-open)
R4 = 15 ohm             D1 = 1N457 (or equiv.)
R5 = 230 ohm          Led1 = Red, 5mm, ultra-bright
R6 = 15K                T1 = 2N2905
R7 = 0.2 ohm, 5W, WW
```

This high-performance circuit first quickly starts (and holds) the charge at 2 amp, but as the voltage rises the current will consequently decrease. When the current falls below 150mA, the charger automatically switches to a lower 'Float' voltage to prevent overcharging.
At the point that a full charge is reached, T1 will bias and the LED will light.
The LM301A is a 8-pin OpAmp. Transistor T1 is a PNP, Silicon, AF-Out type with a TO-39 metal case and can be substituted for a NTE or ECG129. Diode D1, a Si, GP Det. type, can be substituted with a NTE177 or ECG177. The LM350 (U1) needs to be cooled.
The input voltage should equal or about 18volts.

R1's function is to bleed some of the input voltage to the output and vice-versa. A 1N4002 or similar diode can be used also.
R2 & R5 are actually metal-film type resistors but carbon is okay to use. To get the 3K for R2 use two 1K5 (1500 ohm) resistors in series. For R5 use two 470 ohm resistors in parallel. Or whatever combination to get to these values. For R1, 500 ohm, you can use two 1K in parallel or 470 + 33 ohms in series.
R7, the 0.2 ohm resistor, is a 5 watt wire-wound type. Do **not** use the standard carbon type.

S1 is a subminiature pushbutton switch, normally open. I received a couple emails in regards to this switch. I thought the diagram was pretty clear. It shows an 'open' switch with the arrow indicating a 'momentary' connection when pushed. Nothing out of the ordinary here folks and a standard symbol for electronics...

When the start switch is pushed, the output of the charger goes to 14.5 V. As the batttery approaches full charge, the charging current decreases and the output voltage is reduced form 14.5V to about 12.5V, terminating the charging process. Transistor T1 then lights the led as a visual indication of a full charge.

Note: (5-05-2001) C4 was added for improved stability. Not really necessary.

NOTE: For Gelled, lead-acid type 12volt batteries only!

Back to Circuits Page

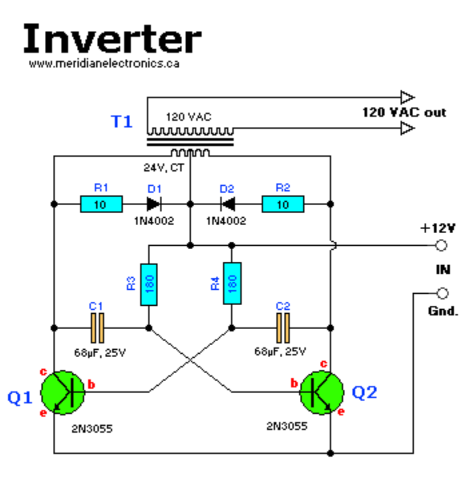

Parts List

```
R1,R2 = 10 ohm, 5 watt, WW
R3,R4 = 180 ohm, 1 watt, WW
C1,C2 = 68uF, 50 Volt, non-polarized electrolytic
D1,D2 = 1N4002, or substitute with a NTE116
Q1,Q2 = 2N3055, or substitute with a NTE130
  *T1 = 120/24ct (or 220/24ct) Transformer
```

Description:

This inverter will sufficiently power any of your 115VAC (or 220VAC)small appliances. T1 choice of amperage is yours to make, but if you can salvage a heavy-duty unit from somewhere, use it. The least expensive method to get a larger transformer would be to remove the old 2000v primary and then re-wind an old microwave transformer. Most of these transformers are rated 1KW or better. Your local TV or Electronics repair shop may have one or dig one up from the dumpster. Just in case you don't know, micro-wave transformers can keep their charge (via the connected electronics) for a long time, so be careful!
R1 and R2 are 10 ohm, wire-wound, and at least 5 watts. Wattage/cooling should be increased accordingly if you decide to beef up the output. For D1 and D2 you can use any power diode like the 1N4002 to 1N4005.

If you live in Europe, Australia, or any other country with a 220VAC system, the only different is the transformer. This particular circuit can be constructed to handle up to 1 KiloWatt (1000 watt). If there is enough interest, I can modify this circuit to include a crow-bar circuit, battery backup, or more output in watts, or everything.
The power output is determined by transformer T1, and power transistors Q1 & Q2. Assume a transformer of about 15A and the chosen transistors of 2N3055 (15A) type, the inverter can supply about **300 watts** with the parts shown. If you are good with electronics all you have to do is replace the 2N3055's and T1 accordingly for more output. It is imperative to **mount Q1 and Q2 on large coolribs**. If you intend to beef everything up with a couple kilowatts a standard (5") cooling fan will also be required. If this is the case, the 2N3771 power transistor is a good choice at 30Amps. NTE's replacement, NTE181, is an improved version of the 2N3771 and carries 90volts instead of the 40 volts and can dissipate 200W instead of 2N3771's 150W.

It is **mandatory** to include at least one suitable fuse and enclose this project in the correct casing. To be really safe you may want to include a primary and secundary fuse for your own protection. You are dealing with 120VAC or 220VAC at respectible amperage so be careful. The powercord also needs to be secured to prevent accidents.

The 68uF capacitors are non-polarized electrolytic types (thanks Gary)! This is an update from the previous types, which specified tantalums. The tantalums however get very hot and explode.
Somesort of cooling fan inside the project case may be a good choice, I myself use a ball-bearing cpu-fan from an old computer. New they don't cost that much either, about 3 bucks or so.

Since T1, and Q1/Q2 are NOT part of the PCB, these few parts can easily be used on a piece of Vero or experimenters board. Radio Shack and Tandy have these boards also available at a very reasonable price (in Canada $3.50). The receptacle(s) on T1's output will be part of the case (obviously). I Just a small note about the 12 Volt battery, this circuit and others similar can draw huge amounts of current and will drain your battery in hurry so don't let your battery go dead! That's why a wind/solar power combination would be an excellent future addition. For those interested in a PCB, I have included one below with a layout. As soon as I get my digital camera I will include pictures of the finished project.

If you wish to check for pin-outs or other references, visit their website: NTE Electronics

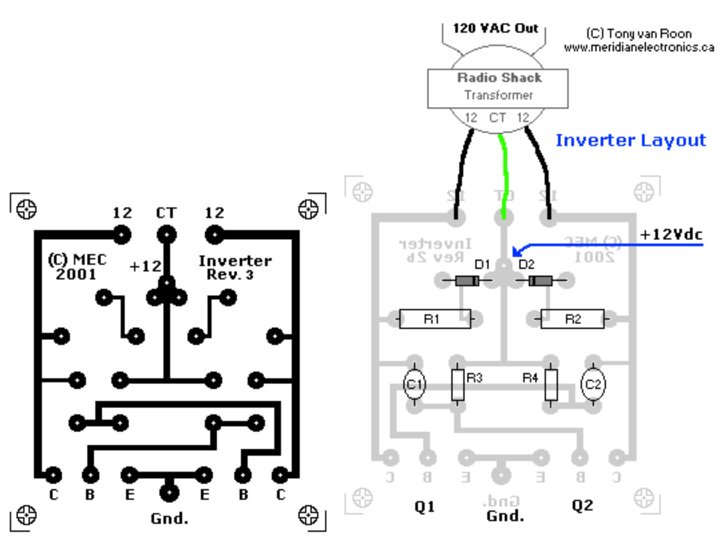

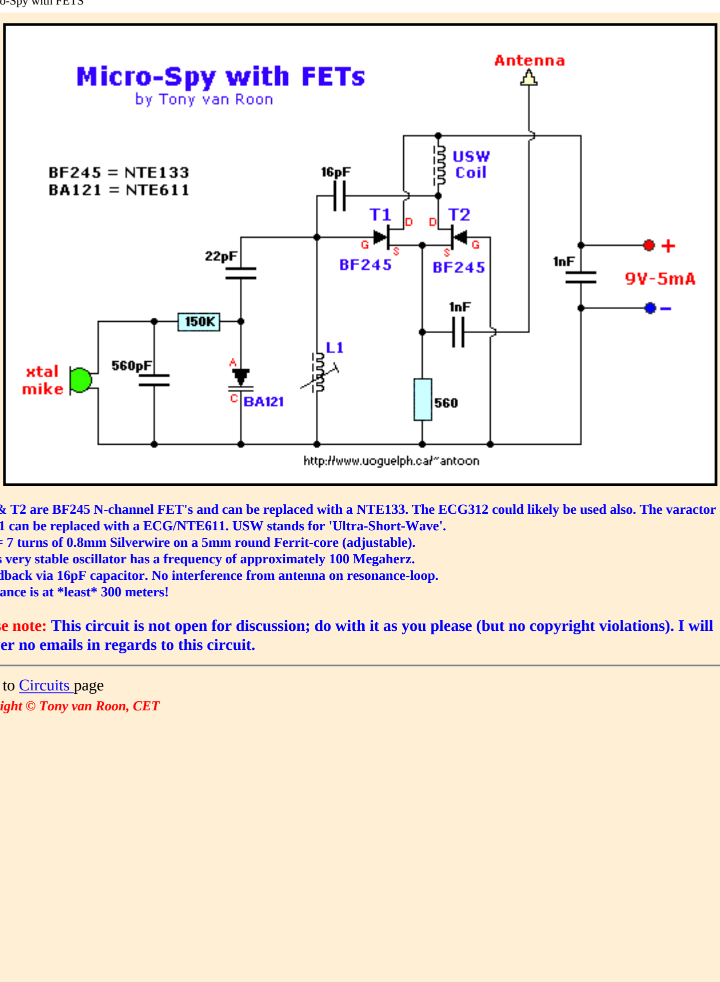

o T1 & T2 are BF245 N-channel FET's and can be replaced with a NTE133. The ECG312 could likely be used also. The varactor diode BA121 can be replaced with a ECG/NTE611. USW stands for 'Ultra-Short-Wave'.
o L1 = 7 turns of 0.8mm Silverwire on a 5mm round Ferrit-core (adjustable).
o This very stable oscillator has a frequency of approximately 100 Megaherz.
o Feedback via 16pF capacitor. No interference from antenna on resonance-loop.
o Distance is at *least* 300 meters!

Please note: This circuit is not open for discussion; do with it as you please (but no copyright violations). I will answer no emails in regards to this circuit.

Back to Circuits page

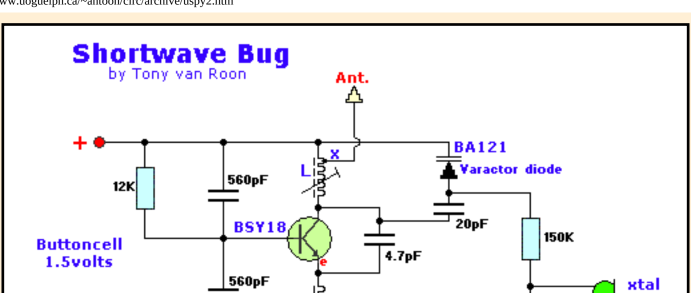

- o BSY18 can be replaced with ECG123AP. BA121 can be replaced with ECG/NTE611 (10pF@4v). USW means 'Ultra-Short-Wave'.
- o L1 = 7 turns of 0.8mm Silverwire(round) on a 5mm round adjustable Ferrit-core. Position 'X' = 0.5 ... 1 turn.
- o This very stable oscillator has a frequency of approximately 100 Megaherz.
- o Frequency determend by the Variac BA121 and 20pF capacitor. Feedback is thru 4.7pF capacitor.
- o USW coil prevents HF signals (feedback) flow to ground.
- o DC biased with the 12K resistor.
- o Distance is from 100 to about 200 meters. Not bad for a little circuit like this!

Please note: This circuit is not open for discussion; do with it as you please (but no copyright violations). I will answer no emails in regards to this circuit.

Back to Circuits page

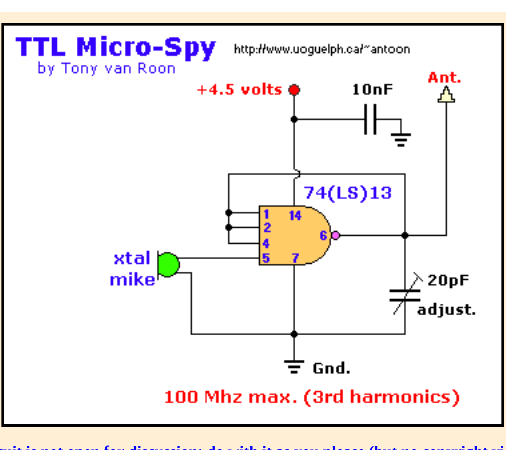

Please note: This circuit is not open for discussion; do with it as you please (but no copyright violations). I will answer no emails in regards to this circuit.

Back to Circuits page

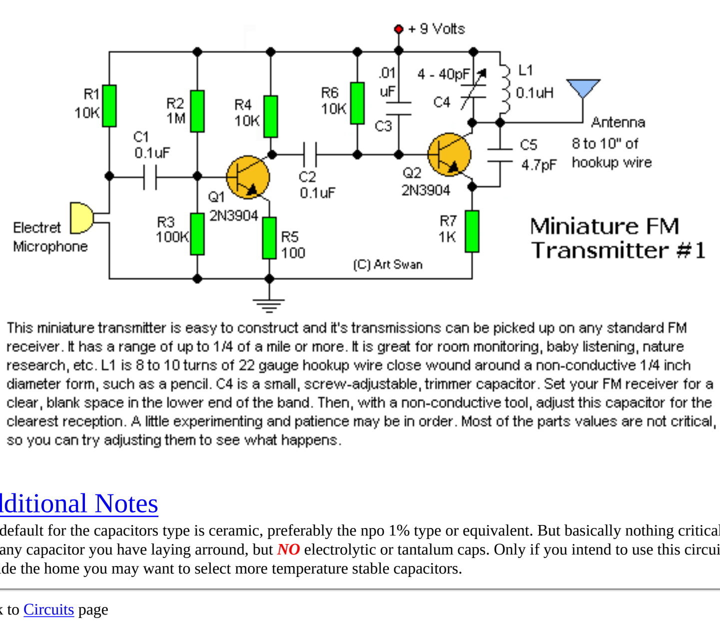

This miniature transmitter is easy to construct and it's transmissions can be picked up on any standard FM receiver. It has a range of up to 1/4 of a mile or more. It is great for room monitoring, baby listening, nature research, etc. L1 is 8 to 10 turns of 22 gauge hookup wire close wound around a non-conductive 1/4 inch diameter form, such as a pencil. C4 is a small, screw-adjustable, trimmer capacitor. Set your FM receiver for a clear, blank space in the lower end of the band. Then, with a non-conductive tool, adjust this capacitor for the clearest reception. A little experimenting and patience may be in order. Most of the parts values are not critical, so you can try adjusting them to see what happens.

Additional Notes

The default for the capacitors type is ceramic, preferably the npo 1% type or equivalent. But basically nothing critical here. Use any capacitor you have laying arround, but ***NO*** electrolytic or tantalum caps. Only if you intend to use this circuit outside the home you may want to select more temperature stable capacitors.

Back to Circuits page

Miniature FM Transmitter #2

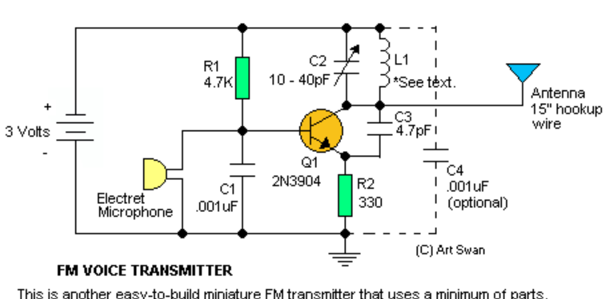

FM VOICE TRANSMITTER

This is another easy-to-build miniature FM transmitter that uses a minimum of parts. Construction is straightforward and non-critical. Although this design uses a 3 volt power source (such as a lithium coin cell), a 9 volt battery can be used, instead, by increasing the value of R1 to 15K and R2 to 1K. C4 is an optional RF bypass capacitor that may help improve performance and increase range. Experiment to find best results. L1 was made by stripping 22 ga. hookup wire of it's insulation, then wrapping it in the grooves of the screw threads of a 1/4 diameter bolt, and then back-screwing the bolt out of the resulting coil. 8 turns were made around the bolt. By wrapping the turns in the threads, a uniform seperation was made between the coil windings.

Additional Notes

The default for the capacitors type is ceramic, preferably the npo 1% type or equivalent. But basically nothing critical here. Use any capacitor you have laying arround, but **NO** electrolytic or tantalum caps. Only if you intend to use this circuit outside the home you may want to select more temperature stable capacitores.

Back to Circuits page

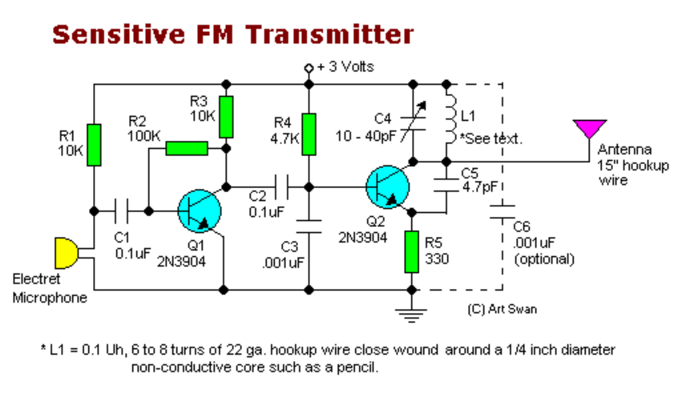

* L1 = 0.1 Uh, 6 to 8 turns of 22 ga. hookup wire close wound around a 1/4 inch diameter non-conductive core such as a pencil.

Additional Notes

The default for the capacitors type is ceramic, preferably the npo 1% type or equivalent. But basically nothing critical here. Use any capacitor you have laying arround, but **NO** electrolytic or tantalum caps. Only if you intend to use this circuit outside the home you may want to select more temperature stable capacitores.

Back to Circuits page

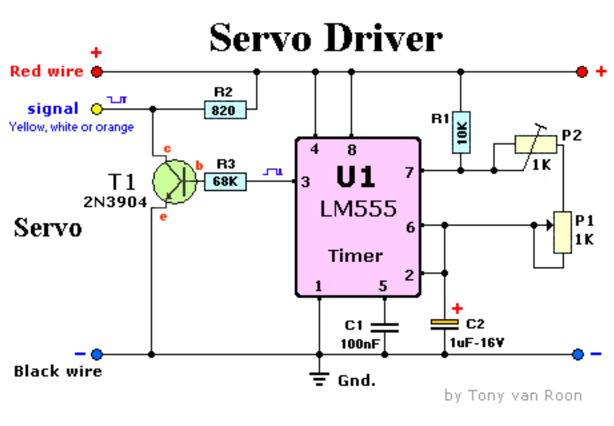

Parts List:
R1 = 10K
R2 = 820 ohm
R3 = 68K
P1 = 1K, potentiometer
P2 = 1K, trim-pot
C1 = 1µF (monolithic)
C2 = 1µF, 16V
Q1 = 2N3904, PN100, NTE123AP, or similar
U1 = LM555, NE555 or MC1455

Additional Notes:
This circuit is just a basic one and can be used to test servos, or as a project interface for other enhancements. With the above component values, the circuit can drive a servo through a 90-degree rotation. The pulse is 1-mS wide, plus or minus 0.5 mS. Q1 inverts the signal from the LM555's pin 3. To get a 180-degree rotation the values of R1, P2, and C1 should be changed to 5K6, 560Ohm and 2uF respectively. R3 accounts for shift variations in the different variety of servo motors.

Pin 1 = Ground (-)
Pin 2 = Trigger
Pin 3 = Output
Pin 4 = Reset
Pin 5 = Control Voltage
Pin 6 = Threshold
Pin 7 = Discharge
Pin 8 = Vcc (+)

Servo Driver, 4

by Tony van Roon

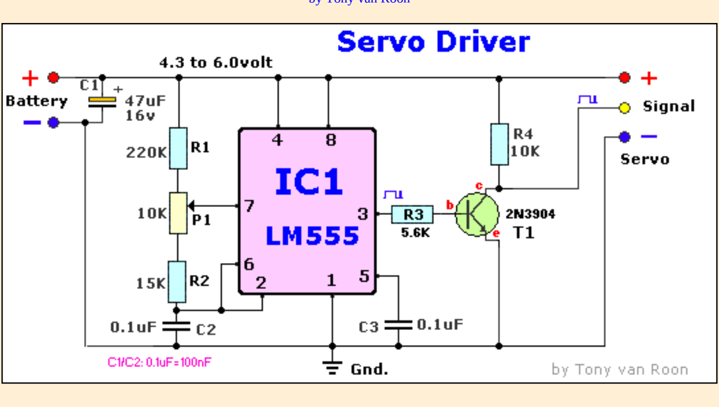

Parts & Description

IC1 = LM555 Timer (or equiv.)	R1 = 220K
C1 = 47uF/16v	R2 = 15K
C2 = 0.1uF	R3 = 5.6K
C3 = 0.1uF	R4 = 10K
T1 = 2N3904 (or equiv.)	P1 = 10K Linear Potmeter

Miscellaneous: Perf board, 5V/6V-DC Adaptor, IC socket 4pin, case (or heat-shrink), knob, wire, solder, soldering iron.

The "out" pin (3) is the control or signal wire. For most servos this is either orange, white or yellow. Output pulse is adjustable, via P1, from 1 to 2 mSec. which means it will turn the servo left or right. T1 is used as a regular amplifier and can be almost any type of NPN transistor (2N2222, 2N3904, PN100, etc.) Electrolytic capacitor C1 takes care of any AC-Hum picked up from your Power Supply or a cheapie adapter. Supply voltage is for 4.3 to 6.0 volts. Data sheet for the 555 timer is available, just click on LM555 in 'Parts & Description'.

Back to Gadgets Menu page

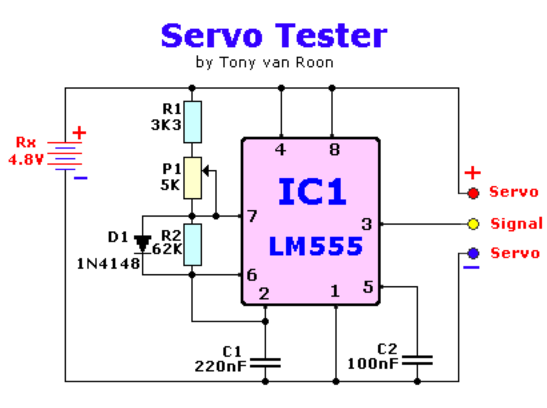

```
IC1 = LM555 Timer (or equiv.)     R1 = 3.3K (3300 ohm, orange-orange-red)
 C1 = 220nF (0.22uF)              R2 = 62K (blue-red-orange)
 C2 = 100nF (0.1uF)               P1 = 5K Potentiometer (Linear)
```

Additional Notes: The circuit above speaks for itself and does not need any more explanation, in my opinion. The Servo control arm can sweep from 1 to 2mSec at approximately 7mA (4.8 volt assumed). PPA is 4 volt at a frame rate of 16 mSec. This is a cheap and worthwhile project. Not only can you check the proper working of your servos you can also check for 'drag' or excessive rubbing when the servos are installed in your aircraft. Radio Shack part numbers are available.

Simplest R/C Circuit

by Tony van Roon

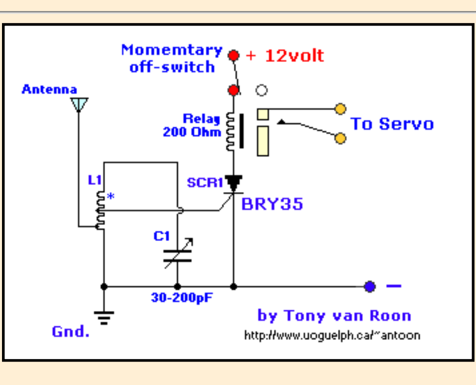

A simple and effective receiver for actuating garage doors, starter motors, alarms, warning systems and numerous other possibillities. The SCR, which has a very low trigger current of 30 uA is typical -- it requires an input power of only 30 uW to activate the relay. A high Q tuned antenna circuit assures rejection of spurious signals. A whip or wire antenna is adequate up to 100 feet from a low power transistor transmitter. A momentary-off switch resets the circuit.
The circuit specifies a *whip* or *wire* antenna which just means a solid piece of wire 6-12 inches long (15-30cm). The antenna coil is experimental but you can start with 10 to 12 turns of #22 (0.7mm) magnet wire, and 5/16" (8mm) coil diameter. Antenna wire is soldered at 1/2 turn of the coil and the gate of the BRY35 is soldered about halfway the coil. This circuit will transmit up to 100-feet with the above specifications @ 30uA.

Back to Circuits Page

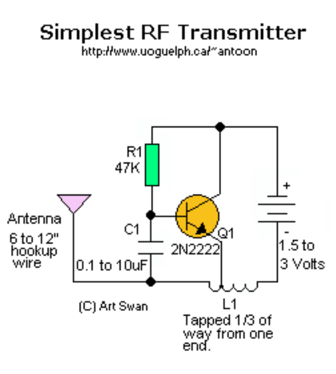

This is probably the simplest radio transmitter that you will find anywhere. It has a total of five parts and can be constructed into a very small space. It is great for science fair projects or other science related projects where short range transmission is useful. It runs on 1.5 to 3 volts, with small hearing aid batteries or lithium "coin" cells being ideal. A thermistor or photoresistor can be inserted in series with R1 to have a varying output frequency dependent on the input. The frequency can also be changed by changing the value of C1. A 2N2222 transistor is recommended, but you can try other types also. Performance tends to vary from type to type as well as from transistor to transistor. L1 is 20 to 30 turns of thin magnet wire (24 to 32 ga.) close wound around a 1/8 to 1/4" diameter non-conductive form. The coil is tapped 1/3 of the way from one end and the tap connected to the emitter of Q1. Experiment with all of the values in this circuit. Nothing is critical, but performance can be varied considerably.

Back to Circuits page

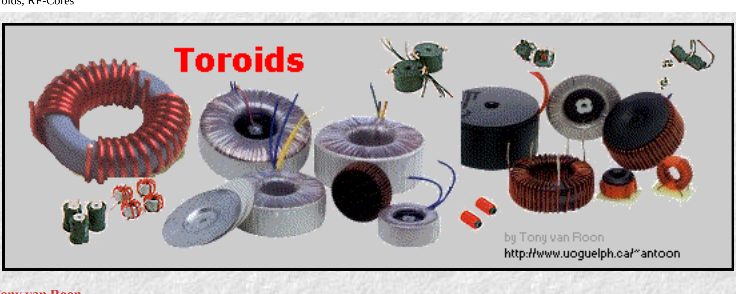

by Tony van Roon

Toroids & RF-chokes, come in different shapes and sizes, like in donut, tube, and stick models, and are used on a large scale in a variety of electronic equipment. Toroids can be of different materials, like Ferrite or Iron. The most common applications today are filtering, and transformers. If you check your cable at the back of your computer monitor you will find one, or even two, on the cable going to your computer. They are also used in Power Supplies, Radio, Ham Radio, Scanners, Transmitters, Transformers, and Electro-Magnet applications.
Here is an excellent link to provide more 'Amidon' information: **Bytemark Inc.**

Below I have made up 4 tables with the most common-size toroids. I hope they can be of some assistance to you. The μ stands for the permeability factor of the core. All measurements are given in 'inches'. I don't have or know the info in mm (metric) so don't ask.

Red E Cores: 500Khz - 30Mhz (u=10)

Core	OD	ID	H (in inches)
T12-2	0.125	0.062	0.050
T16-2	0.160	0.078	0.060
T20-2	0.200	0.088	0.070
T25-2	0.255	0.120	0.096
T30-2	0.307	0.151	0.128
T37-2	0.375	0.205	0.128
T44-2	0.440	0.229	0.159
T50-2	0.500	0.303	0.190
T68-2	0.690	0.370	0.190
T80-2	0.795	0.495	0.250
T94-2	0.942	0.560	0.312
T106-2	1.060	0.780	0.437
T130-2	1.300	0.950	0.437
T157-2	1.570	0.950	0.570
T184-2	1.840	1.250	0.710
T200-2	2.000	1.250	0.550
T200A-2	2.000	1.405	1.000
T225-2	2.250	1.485	0.550
T225A-2	2.250	1.250	1.000
T300-2	3.058	1.925	0.500
T300A-2	3.048	1.925	1.000
T400-2	4.000	2.250	0.650
T400A-2	4.000	2.250	1.300
T520-2	5.200	3.080	0.800

(c) Tony van Roon

Black W Cores: 30Mhz - 100Mhz (u=6)

Core	OD	ID	H (in inches)
T12-10	0.125	0.062	0.050
T16-10	0.160	0.078	0.060
T20-10	0.200	0.088	0.070
T25-10	0.255	0.120	0.096
T30-10	0.307	0.151	0.128
T37-10	0.375	0.205	0.128
T44-10	0.440	0.229	0.159
T50-10	0.500	0.303	0.190
T68-10	0.690	0.370	0.190
T80-10	0.795	0.495	0.250
T94-10	0.942	0.560	0.312

(c) Tony van Roon

Yellow SF Cores: 10Mhz - 50Mhz (u=8)

Core	OD	ID	H (in inches)
T12-6	0.125	0.062	0.050
T16-6	0.160	0.078	0.060
T20-6	0.200	0.088	0.070
T25-6	0.255	0.120	0.096
T30-6	0.307	0.151	0.128
T37-6	0.375	0.205	0.128
T44-6	0.440	0.229	0.159
T50-6	0.500	0.303	0.190
T68-6	0.690	0.370	0.190
T80-6	0.795	0.495	0.250
T94-6	0.942	0.560	0.312
T106-6	1.060	0.570	0.437
T130-6	1.300	0.780	0.437
T157-6	1.570	0.950	0.570
T184-6	1.840	0.950	0.710
T200-6	2.000	1.250	0.550
T200A-6	2.000	1.250	1.000
T224-6	2.250	1.405	0.550

(c) Tony van Roon

Ferrite Toroids (Amidon)

Core	OD	ID	H (in inches)
FT-23	0.230	0.120	0.060
FT-37	0.375	0.187	0.125
FT-50	0.500	0.281	0.188
FT-82	0.825	0.520	0.250
FT-87	0.870	0.540	0.250
FT-87A	0.870	0.540	0.500
FT-114	1.142	0.750	0.295
FT-114A	1.142	0.750	0.545
FT-140	1.400	0.900	0.500
FT-140A	1.400	0.900	0.590
FT-150	1.500	0.750	0.250
FT-150A	1.500	0.750	0.500
FT-193	1.932	1.250	0.625
FT-193A	1.932	1.250	0.750
FT-240	2.400	1.400	0.500

(c) Tony van Roon

Iron Powder Properties:

Material	Basic-powder	Permeability (μ)	Freq.Range (MHz)	Color-Code
0	Phenolic	1	100 - 300	Tan
1	Carbonyl C	20	0.5 - 5.0	Blue
2	Carbonyl E	10	2.0 - 30.0	Red
3	Carbonyl HP	35	0.05 - 0.5	Gray
6	Carbonyl SF	8	10 - 50	Yellow
7	Carbonyl TH	9	5.0 - 35.0	White
10	Carbonyl W	6	30 - 100	Black
12	Synthetic Oxide	4	50 - 200	Green/White
15	Carbonyl GS6	25	0.10 - 2.0	Red/White
17	Carbonyl	4	50 - 200	Blue/Yellow
26	Special	75	LF Filters,Chokes	Yellow/White

*Non Linear: Material #17 was developed as a temperature stable (50) alternative to the #12 (170). Frequency ranges shown are for best 'Q'/Useful over broader frequency ranges with lower 'Q'.

The photograph at left shows a Toroid Red 'E' Iron core and is used in a QRP CW-transmitter (morse-code) application in the 30-meter band.

Back to Circuits Menu

Other Electronics Links:

- Basic Car Audio Electronics
- Bowden's Hobby Circuits
- Chemelec--Gary's website
- Circuit Exchange International
- Online Directory of IC's and Electronic Components New
- Circuits Sage
- Easy Labels New
- Electronic Tutorials Collection
- ElectronicsZone
- Guelph Amateur Radio Club
- HotVsNot.Com Web Directory New
- Jan Hamer's Website (Dutch)
- Jonathan's Electronics Page
- Jordan's Electronics Page
- Karl's Robotic & HV Devices
- Larry's Robotics Page
- LED's Webpage (UK)
- Model Railroad & Misc. Electronics
- PA3BWK's Ultimate Morse Code Website
- PSI Gate, Physical Sciences Information Gateway New
- PopTronics Forum
- Ramseys Electronics
- Red's Award winning Circuits
- John Jenkins' Spark Museum
- Talking Electronics
- Tomi Engdahls' Page
- Website on LEDS
- Zapping NiCads/Lithium-Ion batteries

Last Updated: November 5, 2004

NOTE

If you found this page with a search engine and there is no directory to the right of this page, click HERE to properly load the page.

Overview:
This site will help you to understand basic electronics and some electronic devices. It will, of course, also touch on car audio acoustics and car audio equipment. To make the lessons as painless as possible, you'll find hundreds of diagrams and pictures, .wav files and more than 50 javascript calculators on the 125+ individual web pages. If you make even a modest effort, you'll learn more about car audio electronics than you ever thought possible.

NEWBIES:
If you're new to this site, please read everything on this page before venturing into the rest of the site.

Flash Demos and Javascript Calculators for YOUR Site:
If you want original calculators or Flash animations/demos for your site, Email me. The price will depend on complexity. It doesn't have to be related to electronics. All Flash material will be submitted for your approval before you pay anything. The only exception would be for very complex projects where I would require some sort of deposit.

Email:
If you email me for more specific information, Please do the following:

- Do a search to see if the question is answered on the site.
- Use proper grammar and punctuation (question marks). If you expect me to take time to answer your questions, the least you can do is make an effort to make the questions clear. Of course, if you're not from the 'states' and are not from a native english speaking country, just do your best. It's a shame that the email I get from outside the US has better grammar and sentence structure than the email I get from inside the US. :-(
- Leave a blank line between the end of one question and the beginning of the next question. It makes it easier to read. It also makes sure that I see all of the questions.
- If you email me multiple times and have a question about your system, list the equipment every time. I get a lot of email and can't always remember what you have.

Removing AD Banner:
If there's an advertising frame on the top or bottom of this page (there shouldn't be) and you want to remove it (recommended), click here. Bookmark the upcoming page for future reference.

Sending Links:
If you want to send someone a link to one of the pages in the directory, right click on the desired link and left click on 'copy link location' or 'copy shortcut' in the drop down menu. This will copy the link to the windoze clipboard. You can use the 'paste' command or 'ctrl V' to paste the link into your outgoing message. This will provide a direct link to the appropriate page.

Changing Frame Width:
If you decide to use the forward and back buttons, put your mouse over the right border of this frame, click and drag the frame's border to the right to make this window larger.

Using 'ctrl-f':
If I sent you Email telling you to read certain pages, click in the 'directory's' frame to the right (but not on a link). This will set that frame as the active frame. Bring up the 'find' window by using 'ctrl f'. Then simply type in part of the name of the page that you need to read. You may not find the correct page the first time so just keep hitting the 'find next' button until you locate to the correct page.

Printing Pages of the Site:
To print pages of this site with Internet Explorer go to the toolbar (at the top of the page) and select... TOOLS, INTERNET OPTIONS, ADVANCED TAB, PRINTING and deselect the print backgrounds option. Then click inside the window with the content that you want to print to make the browser focus on the proper frame. The page should print with dark gray text and no background color. If you're using Netscape... Good luck. I use Netscape for browsing, but for some reason, I can't make it print right so I use IE for printing.

Flash Graphics:
Flash graphics have a few additional options when compared to static graphics. If you right click on any part of the graphic (not the transparent background), you will see a special menu. If you uncheck the 'play' command, the motion will stop. If you select 'zoom', you can zoom in on the image. When zoomed in, the standard cursor will change to a hand cursor when over the graphic. The hand allows you move the graphic around in the window.

Don't Cheat Yourself:
If you don't fully understand something, reread it. I don't believe that anyone (especially those who are new to car audio) will be able to fully understand everything here without having to reread more than a few pages. This information is based on my experience and should NOT be your only source of information. As a matter of fact, you should read everything that you can find on as many different sites as you can find. We all have slightly different perspectives and will explain things in different ways.

DISCLAIMER:
After reading this, it does NOT qualify you to install any audio or electronic equipment. This is only a VERY basic introduction into car audio electronics. I make every effort to insure that the information contained herein is accurate but I cannot be held responsible for any errors in text, calculators or graphics. Use the information provided at your own risk.

Try to follow the tutorial in order from top to bottom, I have tried to put everything in the most efficient order possible.

Guestbook

Use the guestbook for ***comments***.
Use Email for ***questions***. Questions Posted to the Guestbook will NOT be answered.

Forward

If you want a topic added or have a question, E-mail me.
You can also contact me at: ICQ# 926828

Legend for Directory:
Page contains graphics
Page contains a javascript program
Page contains a search engine
Page contains test questions
CD ROM version contains additional material. A few simply contain added text but the majority of the pages with the PLUS sign contain new, interactive Flash demos. Many of the new Flash files that are on pages that deal with capacitors, inductors and passive crossovers are graphing applets. They will graph a curve based on the input values.
CD ROM version contains additional test questions on this page.
Page contains electronics schematics
Page contains .wav files
Page contains a Flash demo
Importance: 1 dot... Important 5 dots... Extreeeeemely Important Notice that the FUSES page has 6 dots.

This page was designed to be viewed at a resolution of 1024 x 768. It is best viewed with Netscape version 4.74+ or IE5.x+.

1. **NOTE: If there is no page to the left of this directory, CLICK HERE**

1. For ICON definitions, see the legend on the front page of the site.

1. Directory

1. If there is no page to the left of this directory, CLICK HERE

Bowden's Hobby Circuits

A small collection of electronic circuits for the hobbyist or student. Site includes over 100 circuit diagrams, links to related sites, commercial kits and projects, newsgroups and educational areas. Most of the circuits can be built with common components available from Radio Shack or salvaged from scrap electronic equipment. Most all of the circuits have been built and tested and believed to perform as described, however possible mistakes may be found.

Additions and Corrections (12/04/03)

Digital/Computer

- 16 Bit PC Serial Port Receiver (CMOS)
- 24 bit ISA card Installs into your computer. Parts, plans, schematics and programmng available. Also may be purchased as a kit.
- 32 Bit Serial Receiver (57.6 K Baud TTL & CMOS)
- Parallel Port Relay Interface Circuit
- Reading Data From The Parallel Port
- 1 Second Time Base From Crystal Osc.
- 32.768 KHz Oscillator Using A Common Watch Crystal
- Digital Electronic Lock

Telephone Circuits

- Use Old Telephones as Intercom
- Telephone In-Use LED Indicator
- Telephone In-Use Relay Circuit
- Telephone Ring Generator Using 60Hz Power Transformer
- Telephone Ring Generator Using Switching Power Supply
- Telephone Audio Interface

LED Circuits

- 40 LED Bicycle Light (555 Timer - 6 volt)
- 28 LED Clock
- 72 LED Clock
- Binary Coded Decimal (BCD) Clock
- Digital LED Clock and Timer
- Astable Multivibrator
- Expandable 16 Stage LED Sequencer
- 16 Stage Bi-Directional LED Sequencer
- 10 Stage LED Sequencer
- 9 Second LED Relay Timer
- 9 Second Digital Readout Timer
- Two Transistor LED Flasher
- 1.5 Volt LED Flashers
- LED Photo Sensor Circuit
- Fading Red Eyes
- 12 Volt Lamp Fader (LEDs or incandescent)
- LED Battery Condition Indicator
- 8 Stage LED VU Meter
- Battery Equal Charge Indicator
- IR Remote Control Tester
- AC Line Powered LEDs
- LED Traffic Lights

Analog / RF Circuits

- LED Decibel Meter
- Whistle On - Whistle Off
- Long Loopstick AM Radio Antenna
- Micro Power AM Broadcast Transmitter
- FM Beacon Transmitter (88-108 MHz)
- Op-Amp Basics - The text information for the basic Op-Amp operation, 2nd order filters and bandpass filters was obtained in part from the paper back book "Design of Active Filters, With Experiments" by Howard M. Berlin, 1977. The book is out of print but possibly can be found at used book stores, or through Amazon.com
- Active 2nd Order Filters
- Bandpass Filter (Single Op-Amp)
- Low Power Op-Amp - Audio Amp (Intercom)
- Crystal Radio Circuits
- Simple Op-Amp Radio
- Low Frequency Sinewave Generator
- 3 Transistor Audio Amp (50 milliwatt)
- RC Notch Filter (Twin T)
- Analog Milliamp Meter Used as Voltmeter

Power Circuits

- Simple Variable Voltage Source
- LM317 Variable Voltage Regulator
- LM317 Regulator With Pass Transistor
- Variable 3 - 24 Volt / 3 Amp Power Supply
- Variable Voltage and Current Power Supply
- 2 watt switching power supply
- Low Power DC to DC Converter
- Constant Current Battery Charger
- 120VAC Lamp Chaser Using Solid State Relays
- 120 VAC Lamp Dimmer (full wave SCR)
- Varying Brightness AC Lamp
- 12 Volt Lamp Fader (Automatic)
- 1.5 Hour Lamp Fader (Sunset Lamp)
- 12 Volt Lamp Dimmer (using a pot)
- Interfacing 5 volt CMOS to 12 volt loads
- Low Voltage , High Current Time Delay Circuit
- High Current Regulated Power Supply
- Thermostat for 1KW Space Heater (SCR controlled)

Miscellaneous

- Triangle and Squarewave Generator
- Transistor Schmitt Trigger Oscillator
- Descrete Set/Reset Flip Flop
- Discrete Bistable Flip Flop
- Toggle Switch Debounced Pushbutton
- High Current MOSFET Flip Flop With Debounced Pushbutton
- Monostable Flip Flops (one shot)
- Ignition Coil High Voltage Circuit
- Ignition Coil Buzz Box
- Capacitor Discharge Ignition Circuit
- Generating Long Time Delays
- Flashing Neons (NE-51 / NE-2)
- Sequencing Neons (NE-51 / NE-2)
- 555 Tone Generator (8 Ohm Speaker)
- Generating Negative 5 Volts from 9 Volt Battery
- Touch Activated Lamp
- Game Show Who's First Indicator Lights
- Salt Water Battery
- Transistor, Diode, IC outlines

Circuits Controlling Relays

- Push Button Relay Toggle Circuit With One Transistor
- CMOS Toggle Flip Flop Using Push Button (CD4013)
- CMOS Toggle Flip Flop Using Laser Pointer
- 555 Timer Monostable Circuit Using Pushbutton
- Generating a Delayed Pulse With a dual 555 Timer
- Light Activated Relay (toggled)
- Photo Electric Street Light
- Power-On Time Delay Relay Circuit
- Power-Off Time Delay Relay Circuit
- Electronic Thermostat Relay Circuit
- AC Line Current Detector
- Pinewood Derby Finish Line Lights
- Pinewood Derby Finish Line Using a Computer - Scores times and places.
- Controlling relays with logic voltages
- ....

Semiconductor Data Sheets

TI Semiconductors (search) National Semiconductors (search) Motorola NTE

Software (Moved to separate page)

Java Script Calculators

Resistor Color Code Calculator - Graphical resistor color code calculator by Danny Goodman. Uses pulldown menus and a realistic picture of a resistor.
Another Resistor Color Code Calculator - This one uses check boxes instead of pulldown menus and also calculates the equivalent value of two resistors in parallel. My own creation.
Ohm's Law Calculator - Java Script to solve Ohm's Law for Voltage, Current, Resistance and Power. Enter any two unknowns and solve for the other two.
Voltage Divider Calculator - Solves voltage, current, and power dissipation problems for two element resistive voltage dividers.
L or C Reactance Calculator - Java Script to calculate capacitive or inductive reactance and resonant frequency. For ideal devices only, resistance not included.
Allen Newman's Impedance Calculator - Solves passive series RLC networks, for reactance, impedance and phase angle.
RC Time Calculator - Java Script to solve R and C values for given values of time or instantaneous voltages.
RL Time Calculator - Java Script to solve R and L values for given values of time or instantaneous current.
555 Timer - Frequency and Time Interval Calculator - Calculates positive and negative time intervals for the 555 timer based on R and C values. Also contains descriptions and operation of each input and output of the timer and schematics for the two basic modes of operation (monostable or "one-shot" and astable or "rectangular wave oscillator"). Also contains a pictorial diagram of the timer connected as a LED flasher and a table of connections for the 556 timer (dual 555 timer).
LED Series Resistor Calculator - Finds the series resistance needed for various series LED combinations and supply voltages.
The Electronics Calculator Website - Several calculators for Ohm's law, capacitor or inductor impedance, tuned circuits and RC time constants.
Several JavaScript Calculators by John Owen. - Audio op-amp filter, Op-amp circuit, Decibels, Zener Diodes and more...
Gregorian Calendar - Displays any month from Oct 1582 forward.

Links to Other Hobby Electronics Sites and Useful Information

Don Klipstein's LED Website - Lots of useful LED information, FAQs, and sources for the brightest and most efficient LEDs.
Circuit Archive - University of Washington Circuit Archive, lots of good circuits and links.
EDUCYPEDIA - The educational encyclopedia (Electronics section)
Tomi Engdahl's Electronic Info - Links to a wide variety of analog and digital circuits.
Imagineering On-Line Magazine ,The Design Corner, over 100 circuits in pdf format.
Tom Loredo's Electronics Bookmarks - Many resources for electronics hardware and software.
Harry's Homebrew Homepage - For building amateur radio equipment. Antennas, Receivers, Transmitters and other useful circuits.
Links for FM Transmitter Kits, Circuits, Electronics ...
Electronics Links and Resources -Links to circuits, components, educational sites and more..
Tony's Website - R/C Gadgets and electronic circuits for the hobbyist.
Steve Walz's FTP Site - FTP Resource Site, 1000 Files in 50 Directories.
Wenzel & Associates (Circuits) - Technical Library, Hobby Circuits.
Samuel M. Goldwasser Homepage - Silicon Sam's Technology Resource - FAQs, Links, Troubshooting & Repair, Laser info, Circuits.
Diana's Electronics info page
Beyond Logic - Information on the PC Parallel, Serial and USB ports.
How Stuff Works - Interesting site on how things work, but you will have to clear your screen of many pop up ads.
Deep Cycle Battery Frequently Asked Questions
Energizer Battery Data - Capacity, Weight, Size, etc.
www.saroff.com Has some useful search engines for locating parts and data sheets.

Commercial Electronic Kits and Projects

- TheLEDLight.com Luxeon LEDs, LED bulbs, fixtures, flashlights, lanterns, clusters, arrays, and more...
- lsdiodes.com Basic collection of bright LEDs in several colors at low prices. Brightness ranges from 4000 mcd to 12,000 mcd for the white LEDs.
- JDR Microcontrollers Books, Kits, Test Equipment and more.
- Alltronics Electronic Kits
- KitZ Electronic Kits
- Electronics USA - LED Digital and Binary Clocks, LED Timers (Up and down counting), LED flashlights, and a few other items, as kits or assembled.
- Centerpointe Electronics Store
- Hobbytron - The largest selection of fun electronics and toys!
- Almost All Digital Electronic Kits
- DTE Microsystems
- Hallbar Electronic Kits and Projects
- Kits-R-Us Electronic Kits
- Microchip Technology Inc. (PIC) Controllers
- Circuits For Sale -Subscribe and receive schematics for 1000 circuits, plus FREE software - SuperCAD Lite, SuperPCB Lite, to draw circuit diagrams and build printed circuit boards.
- Mental Automation's products ECAD tools: schematic capture, printed circuit board design/layout, autorouting, circuit simulation, SPICE, and CD ROM Encyclopedia of Electronic Circuits, all running under Windows.
- Express Printed Circuit Boards Download PCB software to layout your project, E-mail the resulting file and receive delivery of finished circuit boards via Federal Express in 3 working days.
- PCB Express 1-Day Delivery, Economical, Easy to order and track, Lot charge as low as $80, E-Mail Help
- Used Electronic Equipment For Sale at E-Bay Online auction community, buy, sell, trade.
- C. Crane Company LED Flashlights, windup radios, and other specialty items.
- Cyber Circuits Software and Demos
- SpamCop - Locate the source of unsolicited mail (Spam) and file a report with the postmaster or abuse department of the originating site. All spam received at my e-mail address will be forwarded to the abuse department of this web page host.
- ....

Electronics Educational Sites

- PIC Microcontroller Tutorial A very good introduction to PIC micros that includes 13 tutorial pages to get you started programming PICs. You will also need a programmer to load the finished program (.HEX file) into the PIC. The DOS programmer software and schematic for the programmer can be downloaded from David Tait's PIC archiveThe file you need is PIC84V05.ZIP. The file contains DOS software and programmer schematic that will work with the PIC16C84, PIC16F84 or the newer PIC16F628 which can be purchased on e-bay for about $2.68 or obtained from www.glitchbuster.com
- Lessons In Electric Circuits - A free series of textbooks on the subjects of electricity and electronics.
- Play Hookey Basic ideas about op-amps, analog circuits, optics, computers and digital logic.
- Alex's Electronic Resource Library An online guide to useful electrical and electronic information.
- Electronics Tutorials A good comprehensive site with detailed examples and book recommendations.
- Basic Electronics Tutorial (Iguana Labs)
- The Art of Electronics (Purchase the book) 1125 large format pages, 80 component-selection tables,1500 figures, extensive practical advice, back-of-the-envelope techniques, exhaustive 4000-entry index.
- CircuitMaker Student Version (3.4M) Get ahead in class with the FREE CircuitMaker Student Version. You will be able to build and simulate circuits in a fraction of the time it takes in the lab.
- DC Circuits Department of Physics, University of Guelph.
- Elements of AC Electricity
- John Adams Beginners Electronics
- Electronics For Beginners

Newsgroups

- sci.electronics.basics
- sci.electronics.components
- sci.electronics.design
- sci.electronics.repair
- sci.electronics.misc
- sci.electronics.cad
- sci.electronics.components
- sci.electronics.equipment
- alt.engineering.electrical
- Search Newsgroup Discussions

Electronic Component Suppliers

- Mouser Electronics
- DIGI-KEY Corporation
- Allied Electronics
- Surplus Traders (Solar panels)
- Jameco
- Hosfelt Electronics
- Radio Shack
- Electronix Express - Components and test equipment for schools, colleges and industry. Very nice site.
- Dan's Small Parts and Kits -Good selection of small components at low cost.
- Bill's Surplus Parts For Sale- Resistors, capacitors, semiconductors and a few other items. I don't have a large inventory, just more than I need.

Go to top

Having trouble building a circuit similar to something on this site?

The ZAP-Adaptor, rejuvenates DEAD NiCads

By Tony van Roon

"Don't throw away those seemingly un-chargeable, rechargeable batteries; they could very well be brought back to life with the aid of this simple circuit."

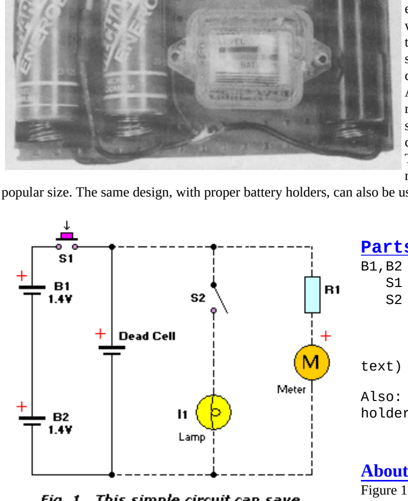

It is a well known fact that rechargeable batteries have a tendency to "play possum", appearing to be dead, while merely napping instead. It is also a known fact that such batteries can be awakened from their *siesta* by giving them the proper "wake-up call". The *Zap-Adapter* described in this article is designed to arouse most of those batteries from their seemingly endless slumber.
Nickel-Cadmium batteries have a tendency to grow internal "whiskers"--fine weblike shorting paths between the internal battery elements--when not used for prolonged periods of time. Those whiskers eventually discharge the cell completely. when attempting to charge such a battery, the internal whiskers short out the relatively small charging current (which is usually only about 1/10th of the cell's ampere rating), preventing the battery from being recharged. Awakening a nickel-cadmium cell (assuming that it *can* be aroused) requires that a high-current be applied to the battery for a couple seconds to blase away the whiskers. Once the whiskers are gone, you can charge the battery in the normal manner.
The Zap-Adapter that we'll describe is intended for use with AA rechargeable nickel-cadmium batteries, which seem to be the most popular size. The same design, with proper battery holders, can also be used for AAA, C, or D cells, all of which are single cell types.

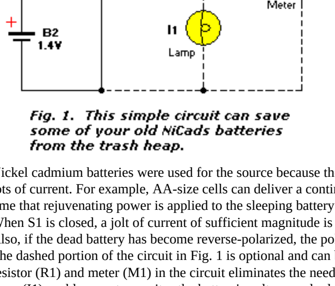

Fig. 1. This simple circuit can save some of your old NiCads batteries from the trash heap.

Parts List:

```
B1,B2 = AA nickel-cadmium battery
   S1 = Normally Open momentary pushbutton switch
   S2 = SPST slide or toggle switch
        R1 = 50K potentiometer (optional, see text)
        M1 = 50µA to 1mA meter (optional, see text)
        I1 = 3-volt flashlight bulb (optional, see text)

Also: perfboard materials, enclosure, 3 AA battery holders, double-side tape,
      wire, solder, hardware, etc.
```

About the Circuit:

Figure 1 shows a schematic diagram of a simple circuit that can be used to dissolve the whisker formation that prevents nickel-cadmium batteries from receiving a charge. The circuit consist of nothing more that two fully charged, series connected nicad batteries (B1 and B2) and a switch (S1).
Nickel cadmium batteries were used for the source because they can deliver lots of current. For example, AA-size cells can deliver a continuous current of 0.5 amperes. Switch S1 allows you to control the amount of time that rejuvenating power is applied to the sleeping battery.
When S1 is closed, a jolt of current of sufficient magnitude is sent through the battery so as to cause the tiny whiskers (shorts) within to open. Also, if the dead battery has become reverse-polarized, the polarity is also corrected by the harsh treatment.
The dashed portion of the circuit in Fig. 1 is optional and can be included to allow you to monitor/test the circuit's operation. Including the resistor (R1) and meter (M1) in the circuit eliminates the need for an external meter. Adding a second switch (S2 in Fig. 1) and a flashlight lamp (I1) enables you to monitor the battery's voltage under load. By removing the dead battery and closing S1 and S2 at the same time, you can test the live batteries under load.

Construction:

The Zap-Adapter was assembled on a small section of perfboard, just large enough to hold the circuit components. Three inexpensive AA battery holders (like those available at Radio Shack/Tandy or other electronic distributors) were mounted to the board; two battery holders, connected in series, for the source current current and the third for the battery that is to be awakened. A push button switch was used for S1. The battery holders and switch can be mounted to the board using double-side tape.
It is a good idea to put the single holder to one side of the board and the double holder (or two holder combination) to the other side to separate the good cells from the bad. If you intend to include the meter and/or lamp circuit in your project, be sure to leave room for them.
If you don't have a small DC milli-ammeter in your junkbox, look for one at swap meets, surplus outlets, or small order catalogs. The meter should have a full-scale current rating of from 50 µA to 1 mA. If you intend to include a meter in your circuit, it will be necessary to determine the appropriate value for R1. That can easily be done by placing a 50K potentiometer in series with the meter, and connecting that branch circuit in parallel with the main circuit, as shown in Fig. 1. Press S1, and adjust the potentiometer for a full-scale meter deflection. Once a full-scale reading is obtained, measure the resistance of the potentiometer, and replace the potentiometer with an equal-value fixed resistor.
If the lamp circuit is included in the project, be aware that different lamps draw different currents, and some may not light with only 1.3 volts. The important thing though is not how bright the bulb glows (if at all), but how the meter reacts.

Use:

Place two fully charged, nickel cadmium batteries in the source battery holders. The meter should give a 0-volt reading since S1 (which is connected between the batteries and the meter) is open. When the switch is closed, the meter reading should jump to between 2.5 and 3.0 volts, depending on the 'full' charge state. Next, put the dead cell in the holder provided. If the meter reading is between 1.3 and 1.4 volts, the battery can be recharged in the normal manner. Since there is no load on the dead battery, even a weak battery mush show a normal reading. What you're looking for is an apparent dead battery. Assuming the meter shows the battery to be dead, press S1; the meter reading should rise rather quickly. Continue to hold the switch closed for about three seconds; the meter should go to around 1.4 volts. If the meter reads nothing, your battery has too far gone to revive. If the meter reading does not go all the way to 1.4 volts, try pressing S1 again to see if you can get it up to 1.4 volts. A couple deep-discharge/full-recharge cycles should rejuvenate the battery.

I fully support this project. Most parts can be obtained via your local Radio Shack or Tandy store. I will answer all questions but via the message forum only. ***Tony's Message Forum*** can be accessed via the main page, gadgets, or circuits page.

Copyright and Credits:

Back to **Circuits** or **R/C Gadgets** page

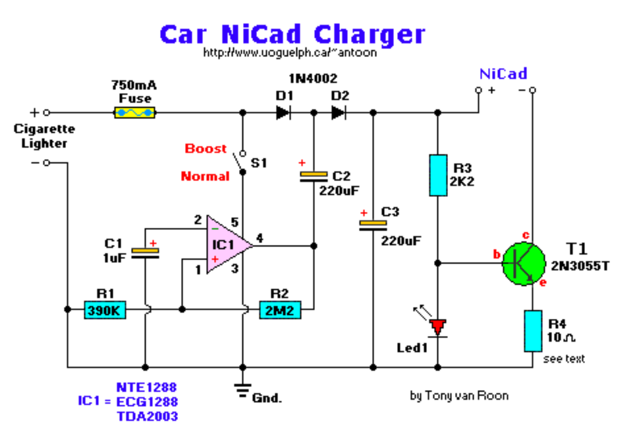

Table 1

Part	Description	Radio Shack #	DigiKey #	Notes
IC1	TDA2003, Au Amp	n/a		Pwr Amp,10A, lin, 5-pin
T1	2N3055T, Transistor			NPN, Power
D1/D2	1N4002, Diode	276-1102	1N4002DICT-ND	Gen purp rect diodes
Led1	Red, 5mm	276-033		Light Emitting Diode
R1	390K, resistor	271-	390KQBK-ND	5%, 1/4W, carbon
R2	2.2M, resistor	271-8061	2.2MQBK-ND	5%, 1/4W, carbon
R3	2.2K, resistor	271-1325	2.2KQBK-ND	5%, 1/4W, carbon
R4	10 Ohm, resistor	271-1301	10QBK-ND	5%, 1/4W, carbon
C1	1µF, Capacitor			25V, electrolytic
C2	220µF, Capacitor	272-1029	P5699-ND	25V, electrolytic
S1	Switch, on-off			SPST, sub-miniature
Fuse	750mA			Slow Blow

This circuit provides up to 20V output from a regular 13.2V automotive battery, to enable constant current charging of nicad battery packs up to 15 cells @ 1.2V (18V total).
IC1 is a Linear, Audio Power Amp (10W) and was orginally designed for car radios by Toshiba. Several replacement types can be used, like the ECG1288, NTE1288 and other substitutes will work fine.
In this circuit, with S1 set in the *'boost'* position, IC1 is used to form a squarewave oscillator, and by coupling this square wave to the 13.2V battery supply via D1 and D2 to obtain over 20 vdc. If this is not needed, S1 is left open (normal).
T1 acts as a current regulator to determine the charge rate of the battery pack. T1 should be mounted on a sufficient coolrib. R4 is selected from the table below, or it can be adapted and switched with a rotary selector switch (watch current rating!). R4 can easily be adjusted for any value to suit your needs other than listed here.

Cell Size	Amp/hr Rate	R4 Value
N	150mA	120 ohms/0.25 W
AA	500mA	47 ohms/0.5W
C	1500mA	12 ohms/0.5W
D	1500mA	12 ohms/0.5W
D (High Capacity)	4000mA	3.3 ohms/2W

R4 value at 14hr rate

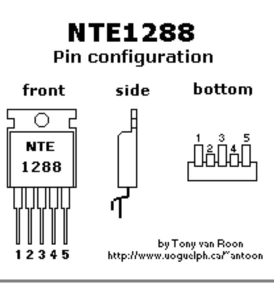

Back to Gadgets or Circuits Page

DC Motor Reversing Circuit

Circuit : Andy Collinson
Email: anc@mitedu.freeserve.co.uk

Description:
A DC motor reversing circuit using non latching push button switches. Relays control forward, stop and reverse action, and the motor cannot be switched from forward to reverse unless the stop switch is pressed first.

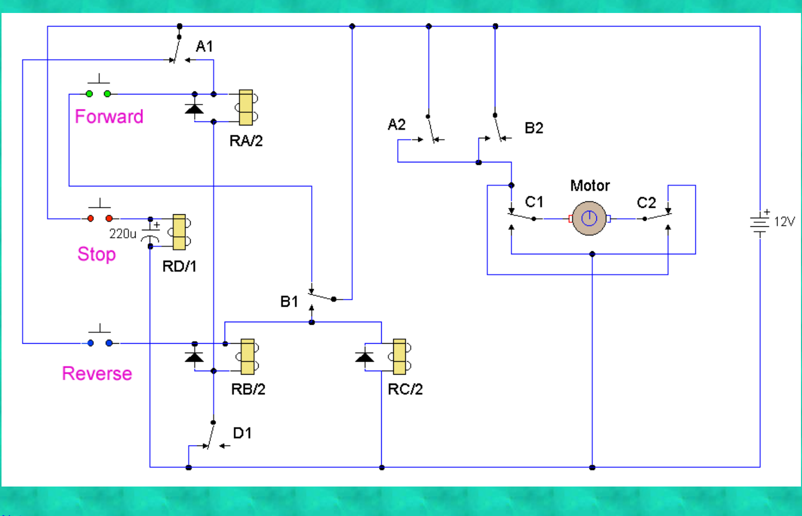

Notes:
Except for the back emf diodes across the relay coils this circuit is identical in function to the example shown on the relay contact labeling guide in the practical section. At first glance this may look over-complicated, but this is simply because three non-latching push button switches are used. When the forward button is pressed and released the motor will run continuously in one direction. The Stop button must be used before pressing the reverse button. The reverse button will cause the motor to run continuously in the opposite direction, or until the stop button is used. Putting a motor straight into reverse would be quite dangerous, because when running a motor develops a back emf voltage which would add to current flow in the opposite direction and probably cause arcing of the relay contacts. This circuit has a built-in safeguard against that condition.

Circuit Operation:
Assume that the motor is not running and that all relays are unenergized. When the forward button is pressed, a positive battery is applied via the NC contacts of B1 to the coil of relay RA/2. This will operate as the return path is via the NC contacts of D1. Relay RA/2 will operate. Contacts A1 maintain power to the relay even though the forward button is released. Contacts A2 apply power to the motor which will now run continuously in one direction. If now the reverse button is pressed, nothing happens because the positive supply for the switch is fed via the NC contact A1, which is now open because Relay RA/2 is energized. To Stop the motor the Stop switch is pressed, Relay D operates and its contact D1 breaks the power to relays A and B, (only Relay A is operated at the moment). If the reverse switch is now pressed and released. Relay B operates via NC contact A1 and NC contact D1. Contact B1 closes and maintains power so that the relay is now latched, even when the reverse switch is opened. Relay RC/2 will also be energized and latched. Contact B2 applies power to the motor but as contacts C1 and C2 have changed position, the motor will now run continuously in the opposite direction. Pressing the forward button has no effect as power to this switch is broken via the now open NC contact B1. If the stop button is now pressed. Relay D energizes, its contact D1 breaks power to relay B, which in turn breaks power to relay C via the NO contact of B1 and of course the motor will stop. All very easy. The capacitor across relay D is there to make sure that relay D will operate at least longer than the time relays A,B and C take to release.

Return to Switching Circuits

DC Motor Control Circuit

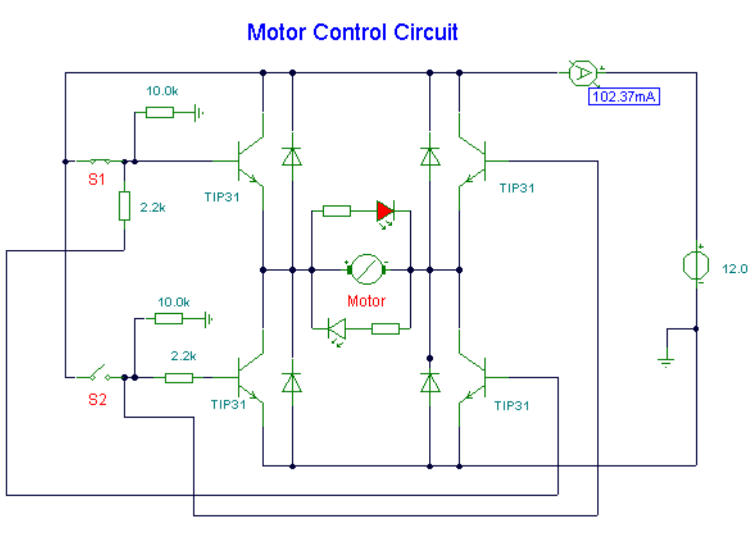

Notes:

Here, S1 and S2 are normally open , push to close, press button switches. The diodes can be red or green and are there only to indicate direction. You may need to alter the TIP31 transistors depending on the motor being used. Remember, running under load draws more current. This circuit was built to operate a small motor used for opening and closing a pair of curtains. As an advantage over automatic closing and opening systems, you have control of how much, or how little light to let into a room. The four diodes surriunding the motor, are back EMF diodes. They are chosen to suit the motor. For a 12V motor drawing 1amp under load, I use 1N4001 diodes.

Back to Switching Circuits

Electronics Projects for R/C
by VA3AVR

Tony's Message Forum Ask your questions here. Someone may answer them.

Tutorials

- 555 Timer/Oscillator
- 741 Op-Amp
- Capacitors updated Added Fig.3b, 10-27-2004
- MosFet Test
- Piezo Education/Tutorial
- Phase Locked Loop
- Resistor Color Code
- SCR Test
- Triac Test
- UJT Test
- Coils
- Integrated Circuits
- Make Your Own Shunts
- Relays, Relay Drivers, Solid-State

Circuits

- 555 Timer Tester - Test those 555's in your junkbox
- 555 Go-No/Go Tester - 555 tester, more advanced.
- 7.2Volt Cycler - 7.2V NiCad packs
- 7.2V Field Charger (.pdf file)
- Airtronics AM/FM - Trainer Cord
- Automatic Device Locator - Beacon
- Auto Pilot for R/C
- 9-V Nicad Charger - From the Netherlands!
- Battery Backup (1) - For Large Aircraft
- Battery Backup (2) - Small system
- Battery Cycler - For Rx/Tx NiCads
- Car NiCad Charger - Using car battery)
- Charger - Constant Current Charger
- Circuits - for the Hobbyist Page
- Crashed Plane Locator - Beacon
- Discharger - NiCad discharger
- Elevon Mixer - by Malcolm Aldred
- Flasher - 'KIT' Back and Forth Flasher
- Futaba-AM - Trainer Cord
- Futaba-FM - Trainer Cord
- Futaba to JR - Trainer Cord
- Futaba (AM) to Futaba (FM) - Trainer Cord
- FlyWire (Deans Ant.) - For Helicopter
- Glowplug Driver - Project for your Flightbox (1)
- Glowplug Panel - Project for your Flightbox (2)
- Hotchek - Brent's website
- Hot Wire Foam Cutter, 1 - by Tom Weedom New
- Hot Wire Foam Cutter, 2 - by Charles Wenzel New
- Hot Wire Foam Cutter, 3 - by Steven Mohr New
- Hot Wire Foam Cutter, 4 - by JoeBoy New
- Hot Wire Foam Cutter, 5 - by The Hermit MachineShop New
- Hot Wire Foam Cutter, 6 - by Al Schoepp New
- Hot Wire Foam Cutter, 7 - by Rocket Team Vatsaas New
- Hot Wire Foam Cutter, 8 - by Daniel Hartman New
- IRF-511 FET - TMOS FET Data Sheet
- JR-FM - JR Trainer Cord
- Lead Acid Charger, 1 - For Gel-Cell Batteries
- Lead-Acid Charger, 2 - Battery Charger
- Lead-Acid Charger, 3 - Charger with 'Float'
- Mini-Drill P.S. - Variable speed for your mini-drill
- Modifying a Servo - Modifying for indefinate rotation New
- Model Rocket Launcher - Time delayed
- Model Rocket Strobe - Xenon Flash Tube
- Model Rocket Parachute - Delayed
- NiCad Sensor - NiCad Voltage Monitor for Rx
- Night Blades - Helicopter night-blades
- Noise Trap - For long servo leads Error-Fix! 5-04-2004
- PCM/PPM Locator & Voltage Watch - by M.J. Pawlowsky New
- Power Panel - Combine it with the Glowplug Driver
- R/C Switch2 - For driving accessories
- R/C Switch3 - Similar, but with 4001
- R/C Timer Switch - Adjustable, 20-80 seconds
- Receiver Regulator - Rx Down-converter to 5V.
- RX-Volt - Dot/Bar Rx Voltmeter.
- Simple Charger - With 'Peak-Detect'
- Simple Constant Current Source - by John Nooyen
- Sequencial Led Flasher - 10 led's
- Servo Tester (2) - Servo Pulse Generator
- Servo Tester (3) - Servo Pulse Tester
- Solar Charging - NiCad Charger
- Two-Tone Train Horn - Dual Tone
- Tail Nav Light - For Heli or Aircraft
- Variable Power Supply - 1 to 30V/1.5A
- Wingtip Nav Lights - Like the real thing
- ZAP Adapter - Rejuvenate 'dead' NiCads.
- Electronic Symbols Template - Windows Paint/Paint Shop Pro

"Green" means on-line, "Red" means off-line

Bookmark this valuable page with *'Ctrl-D'*.

Just in case you're gonna ask: **All drawings are created with Paint Shop Pro**

Info/Data

- Circuits Archive - Older circuits. Most are working, some are not. Could be still useful.
- My Circuits Page - More interesting circuits can be found here.
- Radio Shack Partnumbers - For the most common parts
- Resistor Value Calculator - By Danny Goodman, AE9F NEW
- Data Sheet - Pin-outs for a variety of other components
- TUP/TUN/DUS/DUG - Elektor/Elektuur's Substitute system
- Toroids, RF/EMI Cores - Variety of commonly used toroids, colors, etc.
- Zapping NiCads/Lithium-Ion batteries - Getting the most from your batteries NEW
- LM301A - High Performance OP-AMP
- LM334 - Three Terminal Adjustable Current Source
- LM3914 - Dot/Bar Display Driver Data Sheet
- MC1455 Timer IC - CMOS Timer/Oscillator (CMOS) Data Sheet
- MC14001 - Quad 2-input NOR Data Sheet
- MC14013B - Dual Type D Flip-Flop Data Sheet
- MC3456/MC3556 Timer IC - CMOS Dual Timer/Oscillator Data Sheet
- MC14093B Schmitt Trigger - Quad 2-input NAND Schmitt Trigger Data Sheet
- NE555 Timer IC - Timer/Oscillator Data Sheet
- NE556 Timer IC - Dual Timer/Oscillator Data Sheet
- PN100/200 - Data Sheets for the PN100 and PN200
- LF13741 JFet OpAmp - Monolitic JFET Input OpAmp Data Sheet
- Brent's R/C Electronic Page - Optoglow, Reverser, Go-slow, HotChek.
- Derzsi' Website in Hungary - Good homemade r/c electronics.
- John Nooyen's Site - **Site is down. Anyone has his new url?**
- Johann Aichinger R/C Electronics Page - Excellent site, damn all those bloody pop-ups.
- Model Railroad Electronics from Rutger - Flasher, crossing, etc.
- Stefan's Electric R/C Website - Miniature Speed Controllers, and more!
- Sirius Datasheets - for jumpering the charging diode in transmitters

Get Acrobat Reader from Adobe here: Get Acrobat Reader

DISCLAIMER: Although tested with my own JR gear, I take no responsibility whatsoever for the use and/or implementation thereof, or the misuse leading to damage of your R/C equipment by using any of the above circuits.

BACK to home page

Last Updated: December 8, 2004

Simpele, maar betrouwbare acculader

Inleiding.

Deze lader is in eerste instantie ontworpen voor het laden van kleine accu's, met name voor motoren. In principe kan hij ook gebruikt worden voor het laden van autoaccu's, alleen duurt het wat langer. Omgekeerd zijn laders voor autoaccu's minder geschikt voor het laden van kleine accu's vanwege de te grote laadstroom hetgeen beschadiging van de accu op kan leveren, kromme platen b.v. Algemeen geldt dat een accu ofwel batterij met een laadstroom die gelijk is aan eentiende (0.1C)van zijn capaciteit geladen dient te worden, dan loopt men geen risico de accu voortijdig te doen sneuvelen.
Acculaders zijn te kust en te keur te koop, vaak voor een paar tientjes.
Aan deze laders kleeft echter een groot bezwaar, het laden gebeurt niet met een constante stroom. Zolang de accu vrijwel leeg is loopt er tengevolge van het spanningsverschil tussen lader en accu een redelijke stroom. Echter, zodra de accuspanning hoger wordt loopt de laadstroom snel terug. Hierdoor duurt het vrij lang om de accu geheel te laden.
De hieronder beschreven lader laadt de accu met een constante stroom tot een bepaalde klemspanning. Zodra deze bereikt is loopt de laadstroom automatisch terug en wanneer deze onder een bepaalde waarde daalt schakelt de lader over op een constante uitgangsspanning. Zodra dit gebeurt gaat er een groene LED branden, ten teken dat de accu vol is.

Hieronder staat het schema van een lader die met 3 Ampère de accu laadt tot 14.1 Volt en vervolgens overschakelt naar een uitgangsspanning van 13.6 Volt.

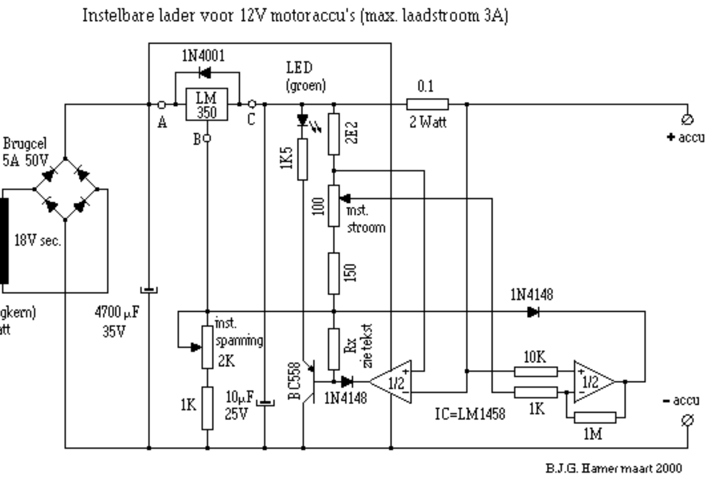

De schakeling werkt als volgt. Het IC LM350 is een instelbare spanningsregelaar. Deze houdt de spanning tussen de punten C en B op 1.25 Volt. Door nu een weerstand tussen punt B en de nul te plaatsen kan men hiermee de uitgangsspanning als het ware optillen. Om de uitgangsspanning nauwkeurig in te kunnen stellen voeren we deze uit door een serieschakeling van een vaste en een regelbare weerstand (potentiometer). In de figuur zijn dit de weerstand van 1K en de potmeter van 2K. Zodra men de accu aansluit gaat er een stroom lopen, deze wordt begrensd door de schakeling opgebouwd rondom de helft van het IC LM1458 (rechts in de figuur). De stroom door de weerstand van 0.1 Ohm veroorzaakt hierover een spanningsval. Deze wordt vergeleken met de spanning op de loper van de 100 Ohm potentiometer. Zodra deze groter wordt dan die ingesteld op de potmeter wordt de uitgang van het IC laag en begint er een stroom (nou stroom, meer een stroompje) te lopen door de diode en hierdoor gaat er minder stroom lopen door de serieschakeling van de 2k potmeter en 1K weerstand. Hierdoor wordt de spanning over deze weerstanden lager en dus de uitgangsspanning. De stroom kan daardoor niet groter worden.

De tak tussen C en B is opgesplitst in drie weerstanden, 2.2 Ohm, potmeter van 100 Ohm en 150 Ohm. Het knooppunt van 2.2Ohm en 100Ohm potmeter is verbonden met de niet-inverterende ingang (+) van de andere helft van het IC LM1458. De inverterende ingang van dit IC is verbonden met de weerstand 0.1 Ohm die in serie staat met de uitgang. Zolang de spanningsval tengevolge van de laadstroom over deze weerstand groter is dan de spanningsval over de weerstand van 2.2 Ohm blijft de uitgang van het IC hoog en daardoor de transistor aangeduidt met BC558 gesperd. Zodra echter de laadstroom beneden een bepaalde waarde komt, ca. 100 mA dan wordt de uitgang van het IC laag, de basisspanning van de transistor wordt dan ca. 2.8 Volt. De transistor komt in geleiding en de LED gaat branden. Tevens gaat er een stroompje lopen door Rx. Dit heeft tot gevolg dat de uitgangsspanning van de lader lager wordt, is hier ingesteld op 13.6 Volt. Dit is een veilige uitgangsspanning, de accu wordt hiermee niet overladen en blijft vol. Rx moet experimenteel bepaald worden, zoals hieronder zal blijken is de grootte orde wel te berekenen,maar de exacte waarde kan daarvan iets afwijken door toleranties van de componenten.

Omdat door het IC LM350 veel vermogen gedissipeert wordt moet deze wel op een flinke koelvin gemonteerd worden, b.v. 4Y (3.3°C/Watt). De diode over het IC is noodzakelijk omdat anders wanneer de voedingsspanning uitvalt of men de accu aansluit voor de netspanning aan te sluiten het IC naar het IC Walhalla gaat.

De afregeling van de schakeling is zeer eenvoudig en daarvoor is alleen een digitale Voltmeter nodig. IC LM1458 moet nog niet geplaatst zijn omdat wanneer geen accu aangesloten is daardoor geen spanningsval over de 0.1Ohm weerstand plaats vind de uitgangsspanning ervan laag zou worden. Men sluit de voltmeter op de uitgang aan en regelt met de potmeter van 2K de uitgangsspanning af op 14.1 Volt. Vervolgens het IC erin plaatsen en dan Rx zodanig groot maken dat de uitgangsspanning 13.6 Volt wordt. De potmeter van 100Ohm zover mogelijk in de richting van de 2.2Ohm weerstand draaien. Nu de accu aansluiten en deze potmeter zover terug draaien totdat de laadstroom 0.1 maal die van de accucapaciteit is (max 3A)
B.V. een accu met een capaciteit van 16Ah instellen op 1.6Ampère.
De voltmeter kan dienst doen als Ampèremeter door deze op het 2 Volt bereik over de weerstand van 0.1 Ohm aan te sluiten. De stroom is de spanning hierover gedeeld door 0.1 , voor 3A dus 0.3V.
De diode 1N4148 op de uitgang van het linker IC gedeelte dient om te voorkomen dat wanneer de uitgangsspanning van de LM1458 hoog is deze de instelling van de spanningsregelaar verstoort.

Voor diegenen die geïnteresseerd zijn in de bepaling van de componenten waarde volgt hieronder de berekening van de essentieele componenten. Aan de hand hiervan kan men zelf een lader op bovenstaand principe berekenen voor andere laadstromen of batterijspanningen (6 Volt accu's worden ook nog veel gebruikt). Voor de doorgewinterde elektronica hobbyist zal dit wel gesneden koek zijn.
Uitgangspunt is de spanning tussen de punten C en B van het IC LM350. Wanneer hiertussen een weerstand wordt aangesloten gaat daardoor zoveel stroom lopen dat de spanning erover 1.25 Volt wordt. In dit geval is de weerstand totaal 2.2 + 100 + 150 = 252.2 Ohm. Omdat het om erg kleine stromen gaat voeren we de berekening maar in milliAmpères uit, daarvan moeten we de weerstandswaarden in kiloOhm nemen.De stroom erdoor is dus 1.25 / 0.2522 = 4.9564 mA. Deze stroom loopt ook door de serieschakeling van de 1K en 2K weerstand. We willen de uitgangsspanning op 14.1 V hebben, dwz, de spanningsval over deze weerstanden moet 14.1 - 1.25 = 12.85 V bedragen. De totale weerstandswaarde van de serieschakeling moet dus 12.85 / 4.9564 = 2.5926 kOhm zijn. Om dit in te kunnen stellen is een van de weerstanden als potmeter uitgevoerd. Met een vaste weerstand van 1kOhm en daarmee een potmeter van 2k in serie kunnen we deze waarde instellen. De weerstand Rx bepalen we als volgt. We willen in die toestand een uitgangsspanning van 13.6 Volt, dwz. de spanning op de serietak van 1k en 2k moet dan 13.6 - 1.25 = 12.35 V zijn. Dat betekent dat de stroom door deze spanningsdeler 12.35 / 2.5926 = 4.7635 mA moet zijn en dus de resterende stroom 4.9564 - 4.7635 = 0.1929 mA door Rx moet vloeien en daarbij een spanningsval veroorzaken van 12.35 - 2.78 = 9.57 V. Meting in deze schakeling gaf dat de spanning op de basis van de transistor BC558 2.78 V bedroeg nadat de uitgang van het IC LM1458 laag geworden was. Met de stroom van 0.1929 mA resulteert dit in een weerstand van 9.57 / 0.1929 = 49.611 kOhm. Een vaste weerstand van 47kOhm zou goed in de buurt komen. Natuurlijk kan men hier ook een 50kOhm potmeter zetten om de waarde exact in te stellen. De weerstand van 1K5 in serie met de LED dient om de stroom door de LED te begrenzen, deze moet beneden 20mA blijven.

Nu moet nog de waarde van de serieweerstand bepaald worden waarmee de schakeling van laden op float moet overgaan. Dat gebeurt wanneer de spanningsval over de weerstand van 0.1Ohm in de positieve poot kleiner is dan die over de weerstand van 2.2 Ohm. Deze bedraagt 2.2 x 4.9564 = 10.9 mV. De weerstand is 0.1 Ohm, om hierover een spanningsval van 10.9 mV te krijgen is de stroom 10.9 / 0.1 = 109 mA. Zodra de laadstroom lager wordt dan deze waarde schakelt het IC om naar de floattoestand (constante uitgangsspanning).
De instelling van de 100Ohm potmeter bepaalt de maximale stroom. De spanning op de loper varieert van 10.9 mV tot 506.54mV. De stroom is hierdoor in te stellen van 0.1A tot 5A, zover mogen we echter niet gaan omdat het IC LM350 dit niet aan kan. Nemen we echter een potmeter van 50Ohm dan kunnen we de 3A weer niet halen. Gewoon zorgvuldig instellen is de remedie.

Met deze gegevens is eenvoudig te berekenen wat de weerstanden te dissiperen hebben. Dwz. product van weerstand maal de stroom in het kwadraat (I^2xR).
De enige weerstand die het enigszins voor zijn kiezen krijgt is die van 0.1Ohm, maar ook dit is niet zoveel. 3 x 3 x 0.1 = 0.9 Watt.
Rest ons nog de voeding te berekenen. Daartoe moeten we wat spanningen bij elkaar optellen. We hebben de accuspanning van 14.1V, verder de spanningsval over de weerstand, 0.1 x 3 = 0.33V, over het IC moet minimaal 3V staan voor een goede werking, totaal 17.43 Volt. De transformator levert 18Veff. Bij ideale gelijkrichting zou dit 18 x 1.41 =25.38 V zijn. Er treden echter verliezen op in de dioden van de brugcel zodat we ca 23.88V overhouden. Veel speling hebben we dus niet, maar teveel betekent alleen maar extra warmteproductie die we vervolgens af moeten voeren. De spanning op de buffercondensator mag niet lager worden dan 17.43V, dwz. de rimpelspanning mag 23.88 - 17.43 = 6.45V bedragen. Bij dubbelfasige gelijkrichting is de rimpelspanning gelijk aan I/(2xfxC) waarin I de ontlaadstroom is, f de netfrequentie en C de capaciteit van de buffercondensator in Farad. Verwisseling van plaats levert dat
C = 3/(2x50x6.45) =0.004651 Farad =4651 µF. Een standaardwaarde is 4700 µF.
Deze moet minimaal een werkspanning van 35 - 40 V hebben.
De andere condensator is niet erg kritisch en alleen bedoeld om spanningspiekjes te onderdrukken welke de schakeling zouden kunnen beïnvloeden.

De brugcel krijgt het ook wel aardig te verduren en het is daarom verstandig niet een te krap bemeten exemplaar te nemen. Een 5A type is vaak aan de krappe kant, neem liever een 8A of 10A type. Deze zijn te kust en te keur verkrijgbaar.

Als laatste de transformator. Op de buffercondensator staat een spanning van ongeveer 25 V. De stroom is 3 A. Dit wil zeggen een vermogen van 25 x 3 = 75 Watt.
De trafo heeft ook nog wat verliezen, dus een keuze van 80Watt is acceptabel. Het beste is hiervoor een ringkerntrafo te nemen, alhoewel zonder problemen ook een meer gebruikelijk type bruikbaar is.

Probeer nooit met een 12V lader een 6V accu te laden. Wel is het mogelijk deze schakeling uit te breiden voor andere accuspanningen door met een schakelaar een andere weerstandstak in te zetten i.p.v. de serieschakeling 1K en 2K. Aan de hand van het bovenstaande moet iedereen dat nu uit kunnen rekenen. De weerstand Rx zal ook aangepast moeten worden, wordt kleiner. Hou echter wel de warmteproducties in het oog, het IC LM350 krijgt veel meer vermogen te verwerken door de grotere spanningsval erover, ruim 6V meer.
Ik hou me graag aanbevolen voor op- en aanmerkingen.

Desktop Power Supply from a PC

(See the narrative and disclaimer at the bottom of the page)

A completed 145 watt ATX power supply with switch, binding posts, labels and feet. Notice the zip ties in the ventilation slots that hold the load resistor.

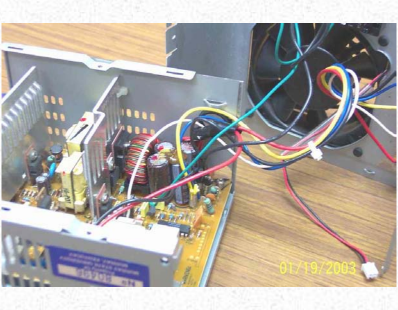

This ATX PS board has leads for +5 (RED), -5 (WHITE), +12 (YELLOW), -12 (BLUE) volts, Ground (BLACK) and switch (GREEN). Dell power supplies manufactured between 1996 and 2000 do not follow the industry standard pinout and color codes. The fan has also been unplugged for better viewing. Since this PS was converted for use in the logic and robotics labs, the selected voltages were tapped. Other users may want combinations of +3.3 V (ORANGE), +5 V and/or +12 V if they are converting one of the newer supplies. For R/C applications, the 5 volt output can also serve as a desktop source to drive receivers and servos. If used as a power source for the micro and sub-micro servos, you must be careful not to drive the servo to either endpoint to avoid stripping the smaller gears in these units. Most standard servos have sufficiently robust gear trains and will simply stall if pushed to the mechanical stops..

Measured voltages on this particular PS (1996 P5-100 MHz Gateway) were about 5.15 and 11.75 volts. The remaining leads have been clipped off at the circuit board.

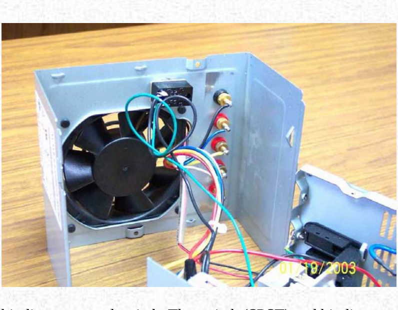

View of the case top with fan, binding posts and switch. The switch (SPST) and binding posts are available at Radio Shack or other electronics suppliers.

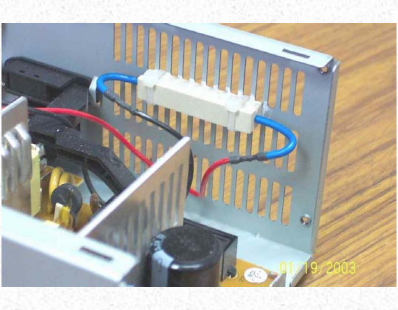

Power supplies in today's computers are known as SWITCHMODE or Switching Mode power supplies and require a load to continue to operate after being switched on (the term switching mode actually applies to the technique of A/C to D/C conversion and not to the power up action). This load is provided by a 10 watt, 10 ohm wire wound load resistor (sandbar - about $0.80 at Radio Shack) across the +5 volt supply. Some inexpensive power supplies may fail if forced on without a load. The sandbar has been zip tied to the case with a small amount of heat sink compound applied. Without cooling, the resistor will get very hot and may fail prematurely. With this arrangement, the resistor will remain barely warm to the touch. If you are using a high wattage supply, it may be necessary to double up on your load resistors to avoid overheating.

Additional comments

Disclaimer: The information presented should not be considered a "HOWTO" article, but merely a documentation of my conversion process. Modern PC Power Supplies can produce high output current levels that may cause internal overheating in the PS or damage to devices connected to them. Any individual attempting their own conversion is cautioned to carefully research their PS specifications and to be mindful of the associated voltages and power. DO NOT work on your opened power supply with it plugged in!!!!

The PS in the picture is a 145 watt ATX salvaged from a 1996 P5-100 MHz Gateway -- I salvage all usable parts from the older PC's before dumping them. This one is set up for a logic lab, hence the +5, -5, +12, -12 volt taps. We also use the +5 to drive servos in the robotics lab. This supply does not have a 3.3 V source, but the newer supplies do. INTEL has continued to modify the ATX specifications to include additional power connectors to support the increased power requirements of the newer motherboards. **Before** any modification is attempted, you should be sure of the type of power supply you are working with and the output currents being produced at each voltage level. Higher wattage supplies can generate fairly hefty levels of current and may overheat or damage devices attached to them. See the Table of Representative Current Levels for other power supplies.

Wiring coming off an industry standard circuit board will be:

ORANGE	+3.3 V
YELLOW	+12 V
BLUE	-12 V
RED	+5 V
WHITE	-5 V
BLACK	GND
GREEN	POWER-ON
GRAY	POWER-OK What is this??
PURPLE	+5 V STANDBY

10051 *** Note that the 1996-2000 Dell's did not completely follow this color coding -- check your voltage levels with a meter before wiring ***

The yellow, red and black wires will likely be grouped together with a clip. Some of the PS's will have a detachable plug for the fan and some will have the fan permanently attached to the circuit board. If the fan is attached, I usually clip the wires then re-solder and cover with heatshrink tubing -- this gives more working room while modifying the PS and allows me to lube the fan.

If you are going to use only the +12 and +5, you can clip the other wires at the circuit board level. For the +5 / +12 volt PS, you will need the following combinations:

GREEN / BLACK	Power on Switch
RED / BLACK	Load Resistor
YELLOW / BLACK	+12 volt source
RED / BLACK	+5 volt source

I use a single common post (GND -- black) for all voltage sources. Our loads are light and we don't require separate grounds for each.

Leave 3 black wires -- switch, load resistor and common (GND) binding post

Leave 2 red wires -- 5 volt binding post and load resistor

Leave 1 yellow wire -- 12 volt binding post

Leave the green wire -- power on switch

As an aside, you can get 7 volts from the +5 V and +12 V outputs -- the +5 V is considered the negative (GND) and +12 the positive -- some geeks will use this combination to run their fans at a lower speed to reduce noise.

I've followed all the instructions, but the output voltage on the +12 V side is still low -- what can I do?? Many of the R/C folks are converting power supplies for the purpose of driving field chargers and are finding that voltage levels below 12 volts are sometimes insufficient to power their chargers. Here are some **tips** that may help increase this voltage level, a little theory and connector pinouts found on most PC supplies.

Cut everything else off even with the board. I usually cut the power harnesses so I can keep as much together as possible. The wires remaining in the power supply should be left long and cut to length as needed. If you leave them too long, they will get in the way when boxing it up, especially if the fan is internal rather than external. Be sure that they stay out of the way of the fan blades. Also be sure to reattach the fan -- some supplies will not function without the fan attached - in any event, you need the cooling. This PS in the pictures has the fan mounted on rubber shock mounts and is extremely quiet. I will also disassemble the fan and lube the bearings while I have the PS open. Since these are salvaged, the fans have been in use for some time and normally the bearings are dry -- I use a high grade sewing machine oil from SINGER. Any light oil will work, just don't use WD40 --

These power supplies are called SWITCHMODE or SWITCHING MODE power supplies and must have a load to function -- hence the 10 ohm 10 watt load resistor on the 5 volt line. These resistors are known as wire wound or sandbar resistors and can be purchased from Radio Shack for about $0.80 each. This resistor will get hot and should have some sort of heat sink. The technique I use keeps them amazingly cool and is easy to do -- just pick the flattest side of the resistor, apply some heatsink compound and attach to the case. I will usually hit the inside of the case with a file to remove any stamping flash on the ventilation slots. The switch (single pole, single throw) and binding posts can also be found at Radio Shack or other electronics supply houses.

I usually deal with on-line suppliers such as Jameco, Digikey, Mouser, etc. because we are buying in larger quantities and Radio Shack is too expensive for large numbers of items. However, you should be able to convert your PC supply for $5.00 or $6.00 dollars -- less if you have a junk box of parts. I suppose you could add a LED indicator with dropping resistor to show the PS is turned on, but the fan is a pretty good hint. We have had supplies running 24/7 for months without problems -- just electricity consumption.

The PS has some fairly hefty electrolytic capacitors and can still give a bit of a shock immediately after being unplugged -- let it sit a couple of minutes before poking around inside. Obviously, you can get whacked if you are inside the case with it still plugged in -- probably won't kill you, but you WILL turn it loose (never mind how I discovered this bit of information).

If you have any questions, comments or corrections, feel free to mail me.

Pedro and Patrick...

~ Welcomes You Warmly ~

...to the world of Hobby Electronics

Home of the Radio Shack Special

Pedro and I (Patrick), do thank you for visiting our website! Our website has been up and running for a little over 2 years now and we thank the many wonderful guests who have stopped by...for the many voyages!

In these web pages, we have put together a collection of our most treasured projects... in the hopes of instilling interest to those that are new to the world of hobby electronics...or perhaps... more 'on-going' travels... if you are a veteran to the field.

Both of us keep the website fresh and alive...with updates to previous projects... and new ones in the making. ***Although Pedro and I are half a world away from each other...we do share a common thread. We are people, just like yourself, in striving to 'give our best' to those that are likened to the field. We have all the bait for you to take...but it will be solely left up to you in the catch!***

Again, we are more than happy to have you stop by and to enjoy the many projects, that we ourselves, have enjoyed making throughout the course!

...your friends, Pedro and Patrick

...and let the project begin!

This site will give you many fantastic journeys into the world of "energy". Although still a phenomena, time is bringing us closer and closer into the complete understanding of the word we call...

ELECTROMAGNETICS

...and so my good friend, kick your shoes off and stay awhile...sit back and take a look at the most enjoyable projects Pedro and I have ever made!

~

projects

What makes all of these projects most enjoyable is that many of the components may be purchased at your local Radio Shack store.

The 'Radio Shack Special' Project

Take some time to read what all the other hobbiests had to say about setting sail on their own maiden voyages...

Pedro's RSS Maiden Voyage	Dick's RSS Maiden Voyage
Phillip's RSS Maiden Voyage	Bruckner's RSS Maiden Voyage
Peter's RSS Maiden Voyage	Murphy's RSS Maiden Voyage
Daniel's RSS Maiden Voyage	Eloy's RSS Maiden Voyage
Ruben's RSS Maiden Voyage	...this space for the next maiden voyage!

---

and now I am pleased to announce ...

~ Pedro's Projects ~

FM Receiver Project (Using the TDA7000 IC)	DC 'Brushless' Motor Project
Digital Pulse Generator Project	Four Decade Digital Counter Project
One Watt Audio Amplifier Project (Using the TAA300 IC)	Versatile Audio Amplifier (Using the TBA810 IC)
Regulated Power Source For Your Electronic Laboratory	An Audio Amplifier Project (Using the LM386 IC)
AM/FM Radio Frequency Amplifier for Receivers	High Voltage Generator Project
A Superheterodyne Receiver (Using the NE602)	Build a Direct Current Converter
NEW A NAND Gate MW Crystal Radio Receiver	...this space for Sir Pedro's next project!

NOTE: Should you need Pedro's advice on any of his projects, just send an e-mail to me, Patrick, concerning the assistance needed ...and I will get in touch with him.

A visitor/hobbiest named 'Mariusz' request putting a link to his own FM transmitter project. Pedro and I are most happy to have the opportunity to share his link for all who stop by our website!

The TX-300 [A 50-300mW FM Transmitter Project]
The TX-500 [A 500mW FM Transmitter with an Independent VHF Amplifier]

Mariusz e-mail address is mailto: info@electronics.realriven.com

Should you have concerns or questions regarding Mariusz' FM Transmitter project, you may e-mail him directly...and he will be more than happy to help!

Another visitor/hobbiest named 'Todor' request putting a link to his own FM transmitter project. Pedro and I are most happy to have the opportunity for all to share Todor's venture!

The Swallow [An FM Transmitter using the 2SC1971 power transistor]

Todor's e-mail address is mailto:todor@mailshack.com

Should you have concerns or questions regarding Todors' FM Transmitter project, you may e-mail him directly...and he will be more than happy to help!

~ plus Patricks' projects ~

The FM Transmitter Section

The 10mW FM Transmitter Project Greco's Maiden Voyage of the 10mW FM Transmitter	The 200mW FM Transmitter Project
A 7 Watt FM Transmitter Project (The Islander) Harold's Maiden Voyage of the Islander	The Construction of 'tapped' Coils for the FM Transmitters
The Open Half-Wave Dipole Antenna Project for the FM Transmitters Harold's Maiden Voyage of the Dipole Antenna	The Workbench Variable Power Supply Project for the FM Transmitters
A Switchable RF Probe/Watt Meter for the FM Transmitters	A Field Strength Meter (FSM) for the FM Transmitters
The Dashboard Digital Voltmeter Project Robert's Maiden Voyage of the DDV	The Inductance/Capacitance Meter Project
A Simple & Sensitive Shortwave Receiver Eloy Jr. Maiden Voyage of the Shortwave Receiver	...open for next project.

~

Or perhaps you are looking for a particular 'something-to-make'. With projects for the hobbyist, ranging from A to Z, Discover Circuits offers you one of the largest collection of electronic projects on the world wide web...you just might find what you are looking for! Their website address is... http://www.discovercircuits.com

NEED A LITTLE THEOREDICAL HELP?

This web site shows the practical (hands-on) experiences one can enjoy when making projects. Should you need help on design or a theoretical explanation of things, do post your question on Harry's Messageboard. He, who also is a dear friend, along with other knowledgeable visitors, will be more than happy to shed more light on your challenge! Just click on Harry's Homebrew Homepages

P.S. You may contact Patrick on areas of thought or if you might need some assistance...

mailto:braincambre500@yahoo.com

You are our website guest number 7105 since October 7th, 2002

Vea en Español. Portuguese

This analog tester will verify straight and crossover cables for continuity, polarity and pair sequence. It consists of a transmitter and a remote. The schematics and PCB were made with Cadsoft Eagle layout editor available at http://www.cadsoft.de.

Part 1:

Schematic of the transmitter.

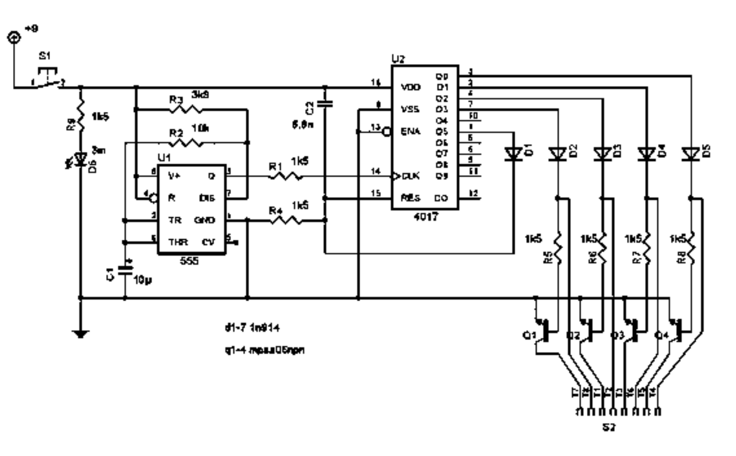

Click here to see a larger version of the schematic.

Schematic description:

The transmitter consists of a timing chip (555) and a decade counter (NTE4017B). The 555 runs in astable mode providing a pulse to trigger incrimination in the decade counter. Transistors act as switches; this prevents false positives for transposed wires. C2 and R4 reset the counter to 0 when first powered up. Pin 1 of the decade counter is looped to the reset pin 15 via diode. This prevents the counter from continuing to 9 before returning to 0.

Part 2:

Schematic of the remote section

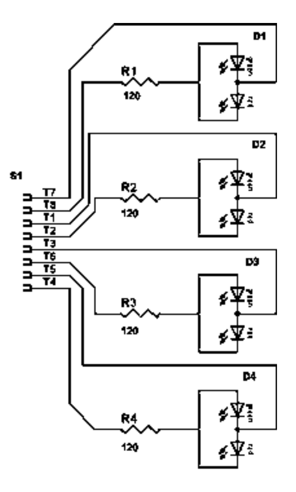

Click here to see a larger version of the schematic.

Schematic description:

Use 5V dual color LED's with two terminals if you use my PCB. The purpose of the dual color LED's is to test the polarity of each pair of wires in the cable under test. Single color LED's may be used but you will not be able to detect polarity errors.

PNG's of PCB and component side of transceiver unit.
PNG's of PCB and component side of the remote unit.

Pictures of my completed tester. I've named this version "Jack" because of Sabrina, a good friend of mine. When she saw it, she asked, "Who's Jack?"

Last updated December 26, 2004

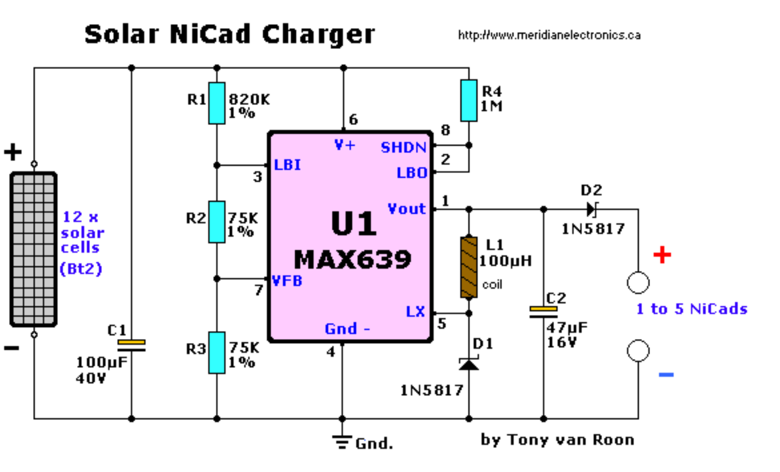

Parts List
R1 = 820K, 1%
R2 = 75K, 1%
R3 = 75K, 1%
R4 = 1M, 5%
D1 = 1N5817, Schottky diode, or equivalent
D2 = 1N5817, Schottky diode, or equivalent)
L1 = 100µH, coil
U1 = MAX639, integrated circuit
C1 = 100µF/40V, Electrolytic capacitor
C2 = 50µF/16V, Electrolytic capacitor

Additional Notes
The MAX639 has its own current limitter build in, set for 200mA. Plenty! Make sure that the charging NiCads can handel the contineous current of 200mA, for example, NiCad battery packs of 1700+ mA used for R/C (Radio Control) cars and electric aircraft.

Back to **Gadgets** or **Circuits**page.

A Basic Stun Gun Concept

Updated "Jan 9 2004"

The low powered version is probably still around 50,000 volts on a slower pulse rate. (If its Built right.)

The main power limitation to this device is T1. It is actually a minature audio transformer connected in reverse to step up the 12 volts to around 400 volts, with no load. But this is not an ideal part for this purpose as it doesn't have the ability to produce the high currents that would result in a more sustained spark on the output.

This Medium powered version has a center tapped primary with dual transistors, resulting in a more efficient circuit. For Simplicity and "Off the Shelf", this was the best I could do.

If your an adventurist, you could wind a small transformer for any of these units below. This would allow for higher efficiency and more current draw.

On the "Low Power" Stun-gun, Current draw is about 80 Ma at 9 volts.

On the "More Power" Stun-gun, Current draw is about 225 Ma at 9 volts. With dual batteries, Better yet, 6 to 8 "AA" cells

**On the "Super Power" Stun-gun, Current draw is "take a guess" at 9 volts.
Should I Dare to actually post this considerably Lethal Circuit**

My hope is this info is a Help to some of you who like to play.

In No Way Do I Recommend Building these Stun-Guns or the actual use of them for any purpose what so-ever.

I Assume NO LIALIBITY for any resulting actions of those persons who build or use any of these devices!

A Real Misconception about Stun-Guns, Is the Voltages.

It Sound Good in the Ads, But it is Current that does the damage and any spark capable of pentrating through the clothing and skin is totally sufficant to do the job.

A blue spark looks pretty, but a yellow spark is much higher current and really dangerous.

Points to Ponder, **Also Interesting, Here is a picture of a 10 inch Diameter Porcelain Insulator! This is the type used on the High Tension Power lines that run through the country side. On a 750,000 volt line, they will use about 35 of these insulators hooked together in a series string.**

The "Flash-over Voltage" of this Insulator is 80,000 Volts and that is over a "surface distance" of about 11 inches.

**When have you ever seen a 100 KV Stun Gun with even a 10 inch Spark Gap?
In Reality, the spark gap determines the "Actual Voltage Available at the probes".
With a spark gap of 1 to 2 inches or so, it is No-where near the 100,000 to 750,000 volts that these manufacturers make claims of.**

NOTE: It is "Illegal" to "Make", and/or "Possess", and/or "Use" this device in most countries throughout the world.

SO CHECK OUT YOUR LAWS AND PLAY CAREFULLY

"Back to My HOME Page"

Simple "Low Power" Stun-gun Schematic

"More Power" Stun-gun Schematic

"Super Power" Stun-gun, Schematic Still to come, MAYBE.

"An Assortment of Coil Winding Pictures for T2".

**I have a small Sewing Machine motor on my Laithe that I can put in place when needed.
It is Speed controlled by a Foot Pedal and I also have an LED, Up/Down Counter.
This coils Secondary is being wound with #40 AWG, Double insulated Magnet wire.**

PCB's
Still to come

SIMPLE STUN GUN

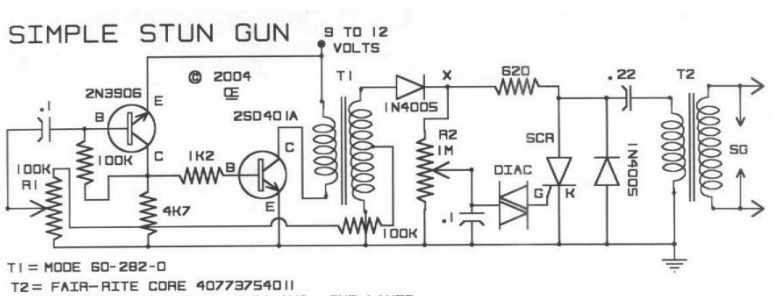

T1 = MODE 60-282-0

T2 = FAIR-RITE CORE 4077375411
PRIMARY = 26 TURNS # 24 AWG ONE LAYER
SECONDARY = 1800 TURNS #40 AWG 10 LAYERS
WITH NOMEX BEWEEN LAYERS

SCR = EC104M = .8A 600V

R1 – SET FOR MAXIMUM VOLTAGE AT DIODE AT POINT X

R2-SET FOR BEST REPETITION RATE OF SPARK

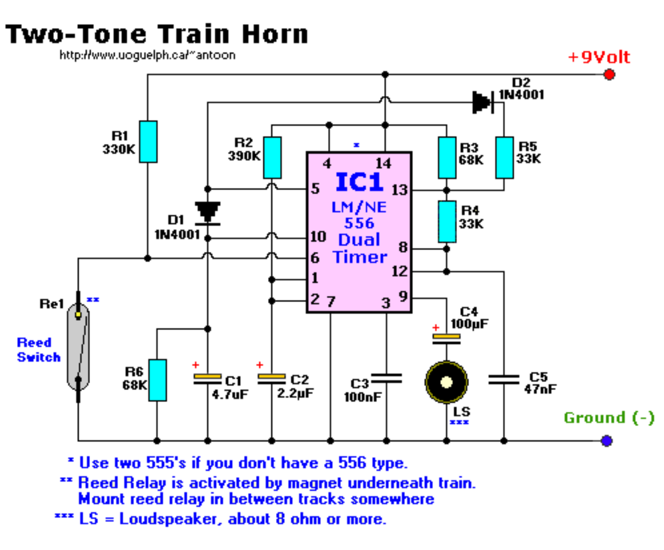

Parts List

```
   R1 = 330K                        C1 = 4.7µF/16volt, electrolytic
   R2 = 390K                        C2 = 2.2µF/16volt, electrolytic
R3,R6 = 68K                         C3 = 100nF, ceramic
R4,R5 = 33K                         C4 = 100µF/16volt, electrolytic
   S1 = on/off switch               C5 = 47nF, ceramic
   Re = Reed Relay (glass tube)     LS = 8 Ohm, 0.25-2watt. Others may work too.
  IC1 = NE556 (or use two 555's)         (I used a 2"/2W type)
D1,D2 = 1N4001
```

Final Notes:

Circuit is build up arround the LM or NE556 dual timer. Each timer producing a high or a low tone. The 556 contains two seperate 555 timers so feel free to use the 555's. If you don't want to fiddle with the reed relay that is fine too. Just put a push on-off switch between negative and pin 6 of IC1. If you go with the reed relay, mount a strong magnet underneath the locomotive and mount the reed relay somewhere between the tracks on a place where you want the horn to be sound. Make sure the reed relay is positioned in such a way that the magnet is able to close the contacts. Make sure reed relay contacts are facing upwards. The sound is very realistic.

C1 & C2 determine the duration (length) of the tones, C1 & C3 determine the frequencies. My original circuit was used and modified for use with a R/C boat, I modified the caps in such a way it gave very low tones with a small 2" speaker. Have fun!

Back to Gadgets Menu page

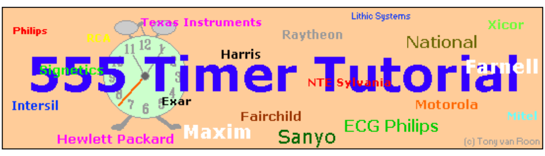

555 Timer Tutorial

© by Tony van Roon

The 555 timer IC was first introduced around 1971 by the Signetics Corporation as the SE555/NE555 and was called "**The IC Time Machine**" and was also the very first and only commercial timer ic available. It provided circuit designers and hobby tinkerers with a relatively cheap, stable, and user-friendly integrated circuit for both monostable and astable applications. Since this device was first made commercially available, a myrad of novel and unique circuits have been developed and presented in several trade, professional, and hobby publications. The past ten years some manufacturers stopped making these timers because of competition or other reasons. Yet other companies, like NTE (a subdivision of Philips) picked up where some left off.

This primer is about this fantastic timer which is after 30 years still very popular and used in many schematics. Although these days the CMOS version of this IC, like the Motorola MC1455, is mostly used, the regular type is still available, however there have been many improvements and variations in the circuitry. But all types are pin-for-pin plug compatible. Myself, every time I see this 555 timer used in advanced and high-tech electronic circuits, I'm amazed. It is just incredible.

In this tutorial I will show you what exactly the 555 timer is and how to properly use it by itself or in combination with other solid state devices without the requirement of an engineering degree. This timer uses a maze of transistors, diodes and resistors and for this complex reason I will use a more simplified (but accurate) block diagram to explain the internal organizations of the 555. So, lets start slowly and build it up from there.

Manufacturer	Type Number
ECG Philips	ECG955M
Exar	XR-555
Fairchild	NE555
Harris	HA555
Intersil	SE555/NE555
Lithic Systems	LC555
Maxim	ICM7555
Motorola	MC1455/MC1555
National	LM1455/LM555C
NTE Sylvania	NTE955M
Raytheon	RM555/RC555
RCA	CA555/CA555C
Sanyo	LC7555
Texas Instruments	SN52555/SN72555

(c) Tony van Roon

Table 1.

The first type-number, in Table 1 on the left, represents the type which was/is preferred for military applications which have somewhat improved electrical and thermal characteristics over their commercial counterparts, but also a bit more expensive, and usually metal-can or ceramic casing. This is analogous to the 5400/7400 series convention for TTL integrated circuits.

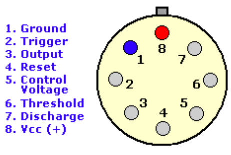

fig. 1. 8-pin T package

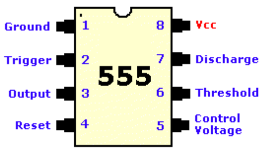

fig. 2. 8-pin V package

The 555, in fig. 1 and fig. 2 above, come in two packages, either the round metal-can called the 'T' package or the more familiar 8-pin DIP 'V' package. About 20-years ago the metal-can type was pretty much the standard (SE/NE types). The 556 timer is a dual 555 version and comes in a 14-pin DIP package, the 558 is a quad version with four 555's also in a 14 pin DIP case.

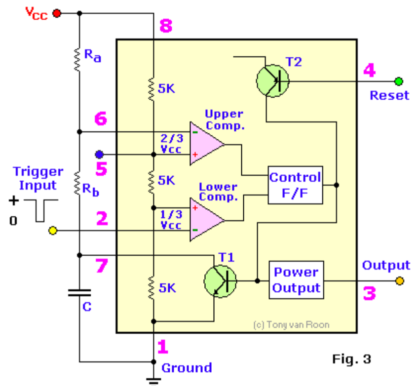

Fig. 3

Inside the 555 timer, at fig. 3, are the equivalent of over 20 transistors, 15 resistors, and 2 diodes, depending of the manufacturer. The equivalent circuit, in block diagram, providing the functions of control, triggering, level sensing or comparison, discharge, and power output. Some of the more attractive features of the 555 timer are: Supply voltage between 4.5 and 18 volt, supply current 3 to 6 mA, and a Rise/Fall time of 100 nSec. It can also withstand quite a bit of abuse.

*The Threshold current determine the maximum value of Ra + Rb. For 15 volt operation the maximum total resistance for **R** (Ra +Rb) is 20 Mega-ohm.*

The supply current, when the output is 'high', is typically 1 milli-amp (mA) or less. The initial monostable timing accuracy is typically within 1% of its calculated value, and exhibits negligible (0.1%/V) drift with supply voltage. Thus long-term supply variations can be ignored, and the temperature variation is only 50ppm/°C (0.005%/°C).

All IC timers rely upon an external capacitor to determine the off-on time intervals of the output pulses. As you recall from your study of basic electronics, it takes a finite period of time for a capacitor (C) to charge or discharge through a resistor (R). Those times are clearly defined and can be calculated given the values of resistance and capacitance.

The basic RC charging circuit is shown in fig. 4. Assume that the capacitor is initially discharged. When the switch is closed, the capacitor begins to charge through the resistor. The voltage across the capacitor rises from zero up to the value of the applied DC voltage. The charge curve for the circuit is shown in fig. 6. The time that it takes for the capacitor to charge to 63.7% of the applied voltage is known as the time constant (t). That time can be calculated with the simple expression:

$$t = R \times C$$

Assume a resistor value of 1 MegaOhm and a capacitor value of 1uF (micro-Farad). The time constant in that case is:

$$t = 1{,}000{,}000 \times 0.000001 = 1 \text{ second}$$

Assume further that the applied voltage is 6 volts. That means that it will take one time constant for the voltage across the capacitor to reach 63.2% of the applied voltage. Therefore, the capacitor charges to approximately 3.8 volts in one second.

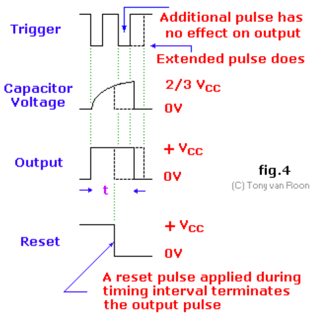

fig.4

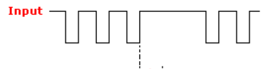

Fig. 4-1

Fig. 4-1, Change in the input pulse frequency allows completion of the timing cycle. As a general rule, the monostable 'ON' time is set approximately 1/3 longer than the expected time between triggering pulses. Such a circuit is also known as a 'Missing Pulse Detector'.

Looking at the curve in fig. 6. you can see that it takes approximately 5 complete time constants for the capacitor to charge to almost the applied voltage. It would take about 5 seconds for the voltage on the capacitor to rise to approximately the full 6-volts.

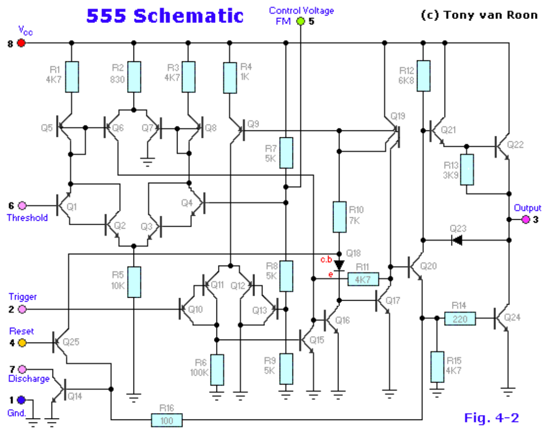

Fig. 4-2

Definition of Pin Functions:

Refer to the internal 555 schematic of Fig. 4-2

Pin 1 (Ground): The ground (or common) pin is the most-negative supply potential of the device, which is normally connected to circuit common (ground) when operated from positive supply voltages.

Pin 2 (Trigger): This pin is the input to the lower comparator and is used to set the latch, which in turn causes the output to go high. This is the beginning of the timing sequence in monostable operation. Triggering is accomplished by taking the pin from above to below a voltage level of 1/3 V+ (or, in general, one-half the voltage appearing at pin 5). The action of the trigger input is level-sensitive, allowing slow rate-of-change waveforms, as well as pulses, to be used as trigger sources. The trigger pulse must be of shorter duration than the time interval determined by the external R and C. If this pin is held low longer than that, the output will remain high until the trigger input is driven high again. One precaution that should be observed with the trigger input signal is that it must not remain lower than 1/3 V+ for a period of time *longer* than the timing cycle. If this is allowed to happen, the timer will re-trigger itself upon termination of the first output pulse. Thus, when the timer is driven in the monostable mode with input pulses longer than the desired output pulse width, the input trigger should effectively be shortened by differentiation. The minimum-allowable pulse width for triggering is somewhat dependent upon pulse level, but in general if it is greater than the 1uS (micro-Second), triggering will be reliable. A second precaution with respect to the trigger input concerns storage time in the lower comparator. This portion of the circuit can exhibit normal turn-off delays of several microseconds after triggering; that is, the latch can still have a trigger input for this period of time *after* the trigger pulse. In practice, this means the minimum monostable output pulse width should be in the order of 10uS to prevent possible double triggering due to this effect. The voltage range that can safely be applied to the trigger pin is between V+ and ground. A dc current, termed the *trigger* current, must also flow from this terminal into the external circuit. This current is typically 500nA (nano-amp) and will define the upper limit of resistance allowable from pin 2 to ground. For an astable configuration operating at V+ = 5 volts, this resistance is 3 Mega-ohm; it can be greater for higher V+ levels.

Pin 3 (Output): The output of the 555 comes from a high-current totem-pole stage made up of transistors Q20 - Q24. Transistors Q21 and Q22 provide drive for source-type loads, and their Darlington connection provides a high-state output voltage about 1.7 volts less than the V+ supply level used. Transistor Q24 provides current-sinking capability for low-state loads referred to V+ (such as typical TTL inputs). Transistor Q24 has a low saturation voltage, which allows it to interface directly, with good noise margin, when driving current-sinking logic. Exact output saturation levels vary markedly with supply voltage, however, for both high and low states. At a V+ of 5 volts, for instance, the low state Vce(sat) is typically 0.25 volts at 5 mA. Operating at 15 volts, however, it can sink 200mA if an output-low voltage level of 2 volts is allowable (power dissipation should be considered in such a case, of course). High-state level is typically 3.3 volts at V+ = 5 volts; 13.3 volts at V+ = 15 volts. Both the rise and fall times of the output waveform are quite fast, typical switching times being 100nS. The state of the output pin will always reflect the inverse of the logic state of the latch, and this fact may be seen by examining Fig. 3. Since the latch itself is not directly accessible, this relationship may be best explained in terms of latch-input trigger conditions. To trigger the output to a high condition, the trigger input is momentarily taken from a higher to a lower level. [see "Pin 2 - Trigger"]. This causes the latch to be set and the output to go high. Actuation of the lower comparator is the only manner in which the output can be placed in the high state. The output can be returned to a low state by causing the threshold to go from a lower to a higher level [see "Pin 6 - Threshold"], which resets the latch. The output can also be made to go low by taking the reset to a low state near ground [see "Pin 4 - Reset"]. The output voltage available at this pin is approximately equal to the Vcc applied to pin 8 minus 1.7V.

Pin 4 (Reset): This pin is also used to reset the latch and return the output to a low state. The reset voltage threshold level is 0.7 volt, and a sink current of 0.1mA from this pin is required to reset the device. These levels are relatively independent of operating V+ level; thus the reset input is TTL compatible for any supply voltage. The reset input is an overriding function; that is, it will force the output to a low state regardless of the state of either of the other inputs. It may thus be used to terminate an output pulse prematurely, to gate oscillations from "on" to "off", etc. Delay time from reset to output is typically on the order of 0.5 µS, and the minimum reset pulse width is 0.5 µS. Neither of these figures is guaranteed, however, and *may vary* from one manufacturer to another. In short, the reset pin is used to reset the flip-flop that controls the state of output pin 3. The pin is activated when a voltage level anywhere between 0 and 0.4 volt is applied to the pin. The reset pin will force the output to go low no matter what state the other inputs to the flip-flop are in. When not used, it is recommended that the reset input be tied to V+ to avoid any possibility of false resetting.

Pin 5 (Control Voltage): This pin allows direct access to the 2/3 V+ voltage-divider point, the reference level for the upper comparator. It also allows indirect access to the lower comparator, as there is a 2:1 divider (R8 - R9) from this point to the lower-comparator reference input, Q13. Use of this terminal is the option of the user, but it does allow extreme flexibility by permitting modification of the timing period, resetting of the comparator, etc. When the 555 timer is used in a voltage-controlled mode, its voltage-controlled operation ranges from about 1 volt less than V+ down to within 2 volts of ground (although this is not guaranteed). Voltages can be safely applied outside these limits, but they should be confined within the limits of V+ and ground for reliability. By applying a voltage to this pin, it is possible to vary the timing of the device independently of the RC network. The control voltage may be varied from 45 to 90% of the Vcc in the monostable mode, making it possible to control the width of the output pulse independently of RC. When it is used in the astable mode, the control voltage can be varied from 1.7V to the full Vcc. Varying the voltage in the astable mode will produce a frequency modulated (FM) output. In the event the control-voltage pin is not used, it is recommended that it be bypassed, to ground, with a capacitor of about 0.01uF (10nF) for immunity to noise, since it is a comparator input. This fact is not obvious in many 555 circuits since I have seen many circuits with 'no-pin-5' connected to anything, but this is the proper procedure. The small ceramic cap may eliminate false triggering.

Pin 6 (Threshold): Pin 6 is one input to the upper comparator (the other being pin 5) and is used to reset the latch, which causes the output to go low. Resetting via this terminal is accomplished by taking the terminal from below to above a voltage level of 2/3 V+ (the normal voltage on pin 5). The action of the threshold pin is level sensitive, allowing slow rate-of-change waveforms. The voltage range that can safely be applied to the threshold pin is between V+ and ground. A dc current, termed the *threshold* current, must also flow into this terminal from the external circuit. This current is typically 0.1µA, and will define the upper limit of total resistance allowable from pin 6 to V+. For either timing configuration operating at V+ = 5 volts, this resistance is 16 Mega-ohm. For 15 volt operation, the maximum value of resistance is 20 MegaOhms.

Pin 7 (Discharge): This pin is connected to the open collector of a npn transistor (Q14), the emitter of which goes to ground, so that when the transistor is turned "on", pin 7 is effectively shorted to ground. Usually the timing capacitor is connected between pin 7 and ground and is discharged when the transistor turns "on". The conduction state of this transistor is identical in timing to that of the output stage. It is "on" (low resistance to ground) when the output is low and "off" (high resistance to ground) when the output is high. In both the monostable and astable time modes, this transistor switch is used to clamp the appropriate nodes of the timing network to ground. Saturation voltage is typically below 100mV (milli-Volt) for currents of 5 mA or less, and off-state leakage is about 20nA (these parameters are not specified by all manufacturers, however). Maximum collector current is internally limited by design, thereby removing restrictions on capacitor size due to peak pulse-current discharge. In certain applications, this open collector output can be used as an auxiliary output terminal, with current-sinking capability similar to the output (pin 3).

Pin 8 (V +): The V+ pin (also referred to as Vcc) is the positive supply voltage terminal of the 555 timer IC. Supply-voltage operating range for the 555 is +4.5 volts (minimum) to +16 volts (maximum), and it is specified for operation between +5 volts and + 15 volts. The device will operate essentially the same over this range of voltages without change in timing period. Actually, the most significant operational difference is the output drive capability, which increases for both current and voltage range as the supply voltage is increased. Sensitivity of time interval to supply voltage change is low, typically 0.1% per volt. There are special and military devices available that operate at voltages as high as 18 V.

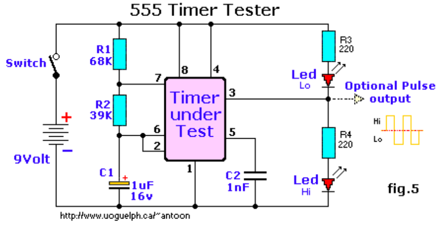

fig.5

Try the simple 555 testing-circuit of Fig. 5. to get you going, and test all your 555 timer ic's. I build several for friends and family. I bring my own tester to ham-fests and what not to instantly do a check and see if they are oscillating. Or use as a trouble shooter in 555 based circuits. This tester will quickly tell you if the timer is functional or not. Although not foolproof, it will tell if the 555 is shorted or oscillating. If both Led's are flashing the timer is most likely in good working order. If one or both Led's are either off or on solid the timer is defective. Simple huh?

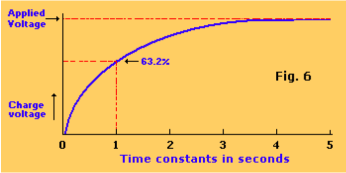

Fig. 6

The capacitor slows down as it charges, and in actual fact never reaches the full supply voltage. That being the case, the maximum charge it receives in the timing circuit (66.6% of the supply voltage) is a little over the charge received after a time constant (63.2%).

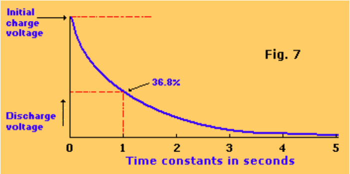

Fig. 7

The capacitor slows down as it discharges, and never quite reaches the ground potential. That means the minimum voltage it operates at must be greater than zero. Timing circuit is 63.2% of the supply voltage.

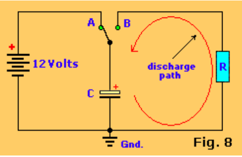

Fig. 8

The discharge of a capacitor also takes time and we can shorten the amount of time by decreasing resistance (R) to the flow of current.

Operating Modes: The 555 timer has two basic operational modes: one shot and astable. In the one-shot mode, the 555 acts like a monostable multivibrator. A monostable is said to have a single stable state--that is the off state. Whenever it is triggered by an input pulse, the monostable switches to its temporary state. It remains in that state for a period of time determined by an RC network. It then returns to its stable state. In other words, the monostable circuit generates a single pulse of a fixed time duration each time it receives and input trigger pulse. Thus the name one-shot. One-shot multivibrators are used for turning some circuit or external component on or off for a specific length of time. It is also used to generate delays. When multiple one-shots are cascaded, a variety of sequential timing pulses can be generated. Those pulses will allow you to time and sequence a number of related operations.

The other basic operational mode of the 555 is as and astable multivibrator. An astable multivibrator is simply and oscillator. The astable multivibrator generates a continuous stream of rectangular off-on pulses that switch between two voltage levels. The frequency of the pulses and their duty cycle are dependent upon the RC network values.

One-Shot Operation: Fig. 4 shows the basic circuit of the 555 connected as a monostable multivibrator. An external RC network is connected between the supply voltage and ground. The junction of the resistor and capacitor is connected to the threshold input which is the input to the upper comparator. The internal discharge transistor is also connected to the junction of the resistor and the capacitor. An input trigger pulse is applied to the trigger input, which is the input to the lower comparator.

With that circuit configuration, the control flip-flop is initially reset. Therefore, the output voltage is near zero volts. The signal from the control flip-flop causes T1 to conduct and act as a short circuit across the external capacitor. For that reason, the capacitor cannot charge. During that time, the input to the upper comparator is near zero volts causing the comparator output to keep the control flip-flop reset.

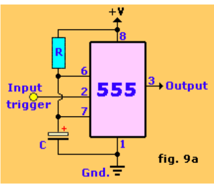

fig. 9a

Notice how the monostable continues to output its pulse regardless of the inputs swing back up. That is because the output is only triggered by the input pulse, the output actually depends on the capacitor charge.

Monostable Mode:

The 555 in fig. 9a is shown here in it's utmost basic mode of operation; as a triggered monostable. One immediate observation is the extreme simplicity of this circuit. Only two components to make up a timer, a capacitor and a resistor. And for noise immunity maybe a capacitor on pin 5. Due to the internal latching mechanism of the 555, the timer will always time-out once triggered, regardless of any subsequent noise (such as bounce) on the input trigger (pin 2). This is a great asset in interfacing the 555 with noisy sources. Just in case you don't know what *'bounce'* is: bounce is a type of fast, short term noise caused by a switch, relay, etc. and then picked up by the input pin.
The trigger input is initially high (about 1/3 of +V). When a negative-going trigger pulse is applied to the trigger input (see fig. 9a), the threshold on the lower comparator is exceeded. The lower comparator, therefore, sets the flip-flop. That causes T1 to cut off, acting as an open circuit. The setting of the flip-flop also causes a positive-going output level which is the beginning of the output timing pulse.

The capacitor now begins to charge through the external resistor. As soon as the charge on the capacitor equal 2/3 of the supply voltage, the upper comparator triggers and resets the control flip-flop. That terminates the output pulse which switches back to zero. At this time, T1 again conducts thereby discharging the capacitor. If a negative-going pulse is applied to the reset input while the output pulse is high, it will be terminated immediately as that pulse will reset the flip-flop.

Whenever a trigger pulse is applied to the input, the 555 will generate its single-duration output pulse. Depending upon the values of external resistance and capacitance used, the output timing pulse may be adjusted from approximately one millisecond to as high as on hundred seconds. For time intervals less than approximately 1-millisecond, it is recommended that standard logic one-shots designed for narrow pulses be used instead of a 555 timer. IC timers are normally used where long output pulses are required. In this application, the duration of the output pulse in seconds is approximately equal to:

$$T = 1.1 \times R \times C \text{ (in seconds)}$$

The output pulse width is defined by the above formula and with relatively few restrictions, timing components R(t) and C(t) can have a wide range of values. There is actually no theoretical upper limit on T (output pulse width), only practical ones. The lower limit is 10uS. You may consider the range of T to be 10uS to infinity, bounded only by R and C limits. Special R(t) and C(t) techniques allow for timing periods of days, weeks, and even months if so desired.
However, a reasonable lower limit for R(t) is in the order of about 10Kilo ohm, mainly from the standpoint of power economy. (Although R(t) can be lower that 10K without harm, there is no need for this from the standpoint of achieving a short pulse width.) A practical minimum for C(t) is about 95pF; below this the stray effects of capacitance become noticeable, limiting accuracy and predictability. Since it is obvious that the product of these two minimums yields a T that is less the 10uS, there is much flexibility in the selection of R(t) and C(t). Usually C(t) is selected first to minimize size (and expense); then R(t) is chosen.

The upper limit for R(t) is in the order of about 15 Mega ohm but should be less than this if all the accuracy of which the 555 is capable is to be achieved. The absolute upper limit of R(t) is determined by the threshold current plus the discharge leakage when the operating voltage is +5 volt. For example, with a threshold plus leakage current of 120nA, this gives a maximum value of 14M for R(t) (very optimistic value). Also, if the C(t) leakage current is such that the sum of the threshold current and the leakage current is in excess of 120 nA the circuit will never time-out because the upper threshold voltage will not be reached. Therefore, it is good practice to select a value for R(t) so that, with a voltage drop of 1/3 V+ across it, the value should be 100 times more, if practical.
So, it should be obvious that the real limit to be placed on C(t) is its leakage, not it's capacitance value, since larger-value capacitors have higher leakages as a fact of life. Low-leakage types, like tantalum or NPO, are available and preferred for long timing periods. Sometimes input trigger source conditions can exist that will necessitate some type of signal conditioning to ensure compatibility with the triggering requirements of the 555. This can be achieved by adding another capacitor, one or two resistors and a small signal diode to the input to form a pulse differentiator to shorten the input trigger pulse to a width less than 10uS (in general, less than T). Their values and criterion are not critical; the main one is that the width of the resulting differentiated pulse (after C) should be *less* than the desired output pulse for the period of time it is below the 1/3 V+ trigger level.

There are several different types of 555 timers. The LM555 from National is the most common one these days, in my opinion. The Exar XR-L555 timer is a micropower version of the standard 555 offering a direct, pin-for-pin (also called plug-compatible) substitute device with an advantage of a lower power operation. It is capable of operation of a wider range of positive supply voltage from as low as 2.7volt minimum up to 18 volts maximum. At a supply voltage of +5V, the L555 will typically dissipate of about 900 microwatts, making it ideally suitable for battery operated circuits. The internal schematic of the L555 is very much similar to the standard 555 but with additional features like 'current spiking' filtering, lower output drive capability, higher nodal impedances, and better noise reduction system.

Maxim's ICM7555, and Sanyo's LC7555 models are a low-power, general purpose CMOS design version of the standard 555, also with a direct pin-for-pin compatibility with the regular 555. It's advantages are very low timing/bias currents, low power-dissipation operation and an even wider voltage supply range of as low as 2.0 volts to 18 volts. At 5 volts the 7555 will dissipate about 400 microwatts, making it also very suitable for battery operation. The internal schematic of the 7555 (not shown) is however totally different from the normal 555 version because of the different design process with cmos technology. It has much higher input impedances than the standard bipolar transistors used. The cmos version removes essentially any timing component restraints related to timer bias currents, allowing resistances as high as practical to be used.
This very versatile version should be considered where a wide range of timing is desired, as well as low power operation and low current sync'ing appears to be important in the particular design.
A couple years after Intersil, Texas Instruments came on the market with another cmos variation called the LINCMOS (LINear CMOS) or Turbo 555. In general, different manufacturers for the cmos 555's reduced the current from 10mA to 100µA while the supply voltage minimum was reduced to about 2 volts, making it an ideal type for 3v applications. The cmos version is the choice for battery powered circuits. However, the negative side for the cmos 555's is the reduced output current, both for sync and source, but this problem can be solved by adding a amplifier transistor on the output if so required. For comparison, the regular 555 can easily deliver a 200mA output versus 5 to 50mA for the 7555. On the workbench the regular 555 reached a limited output frequency of 180Khz while the 7555 easily surpassed the 1.1Mhz mark and the TLC555 stopped at about 2.4Mhz. Components used were 1% Resistors and low-leakage capacitors, supply voltage used was 10volt.

Some of the less desirable properties of the regular 555 are high supply current, high trigger current, double output transitions, and inability to run with very low supply voltages. These problems have been remedied in a collection of CMOS successors.
A caution about the regular 555 timer chips; the 555, along with some other timer ic's, generates a big (about 150mA) supply current glitch during each output transition. Be sure to use a hefty bypass capacitor over the power connections near the timer chip. And even so, the 555 may have a tendency to generate double output transitions.

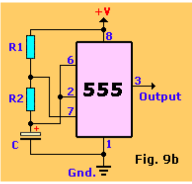

Fig. 9b

Astable operation: Figure 9b shows the 555 connected as an astable multivibrator. Both the trigger and threshold inputs (pins 2 and 6) to the two comparators are connected together and to the external capacitor. The capacitor charges toward the supply voltage through the two resistors, R1 and R2. The discharge pin (7) connected to the internal transistor is connected to the junction of those two resistors.
When power is first applied to the circuit, the capacitor will be uncharged, therefore, both the trigger and threshold inputs will be near zero volts (see Fig. 10). The lower comparator sets the control flip-flop causing the output to switch high. That also turns off transistor T1. That allows the capacitor to begin charging through R1 and R2. As soon as the charge on the capacitor reaches 2/3 of the supply voltage, the upper comparator will trigger causing the flip-flop to reset. That causes the output to switch low. Transistor T1 also conducts. The effect of T1 conducting causes resistor R2 to be connected across the external capacitor. Resistor R2 is effectively connected to ground through internal transistor T1. The result of that is that the capacitor now begins to discharge through R2.
The only difference between the single 555, dual 556, and quad 558 (both 14-pin types), is the common power rail. For the rest everything remains the same as the single version, 8-pin 555.

As soon as the voltage across the capacitor reaches 1/3 of the supply voltage, the lower comparator is triggered. That again causes the control flip-flop to set and the output to go high. Transistor T1 cuts off and again the capacitor begins to charge. That cycle continues to repeat with the capacitor alternately charging and discharging, as the comparators cause the flip-flop to be repeatedly set and reset. The resulting output is a continuous stream of rectangular pulses.

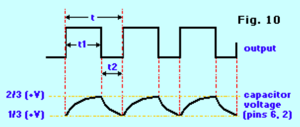

Fig. 10

The frequency of operation of the astable circuit is dependent upon the values of R1, R2, and C. The frequency can be calculated with the formula:

$$f = 1/(.693 \times C \times (R1 + 2 \times R2))$$

The Frequency f is in Hz, R1 and R2 are in ohms, and C is in farads. The time duration between pulses is known as the 'period', and usually designated with a 't'. The pulse is on for t1 seconds, then off for t2 seconds. The total period (t) is t1 + t2 (see fig. 10). That time interval is related to the frequency by the familiar relationship:

$$f = 1/t \text{ or } t = 1/f$$

The time intervals for the on and off portions of the output depend upon the values of R1 and R2. The ratio of the time duration when the output pulse is high to the total period is known as the duty-cycle. The duty-cycle can be calculated with the formula:

$$D = t1/t = (R1 + R2) / (R1 + 2R2)$$

You can calculate t1 and t2 times with the formulas below:

$$t1 = .693(R1+R2)C$$
$$t2 = .693 \times R2 \times C$$

The 555, when connected as shown in Fig. 9b, can produce duty-cycles in the range of approximately 55 to 95%. A duty-cycle of 80% means that the output pulse is on or high for 80% of the total period. The duty-cycle can be adjusted by varying the values of R1 and R2.

Applications:

There are literally thousands of different ways that the 555 can be used in electronic circuits. In almost every case, however, the basic circuit is either a one-shot or an astable. The application usually requires a specific pulse time duration, operation frequency, and duty-cycle. Additional components may have to be connected to the 555 to interface the device to external circuits or devices. In the remainder of this experiment, you will build both the one-shot and astable circuits and learn about some of the different kinds of applications that can be implemented. Furthermore, the last page of this document contains 555 examples which you can build and experiment with.

Required Parts:

In addition to a breadboard and a DC powersupply with a voltage in the 5 to 12 volt range, you will need the following components: 555 timer, LED, 2-inch /8 ohm loudspeaker, 150-ohm 1/4 watt resistor, two 10K ohm 1/4 resistors, two 1-Mega ohm 1/2 watt resistors, 10 Mega ohm 1/4 watt resistor, 0.1 µF capacitor, and a 0.68µF capacitor.

Experimental steps:

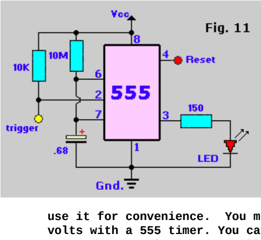

Fig. 11

This circuit is resetable by grounding pin 4, so be sure to have an extra wire at pin 4 ready to test that feature.

1. On your breadboard, wire the one-shot circuit as shown in figure 11.

**2. Apply power to the circuit. If you have a standard 5 volt logic supply, use it for convenience. You may use any voltage between 5 and 15 volts with a 555 timer. You can also run the circuit from battery power. A standard 9-volt battery will work perfectly.
With the power connected, note the status of the LED:
is it on or off? ________________**

**3. Connect a short piece of hook-up wire to the trigger input line on pin 2. Momentarily, touch that wire to ground. Remove it quickly. That will create a pulse at the trigger input.
Note and record the state of LED: _____________________**

4. Continue to observe the LED and note any change in the output state after a period of time. What is the state? ______________

5. When you trigger the one-shot, time the duration of the output pulse with a stopwatch or the seconds hand on your watch. To do that, the instant that you trigger the one-shot by touching the wire to ground, immediately start your stopwatch or make note of the seconds hand on your watch. Trigger the one-shot and time the output pulse. Write in the approximate value of the pulse-duration: ______________________

**6. Using the values of external resistor and capacitor values in Fig. 11 and the time interval formula for a one-shot, calculate the output-pulse duration.
What is your value? _____________________**

**7. Compare your calculated and timed values of output pulses. Explain any discrepancies between your calculated and measured values.
Answer: ____**

8. Connect a short piece of hook-up wire to pin 4. You will use that as a reset.

9. Trigger the one-shot as indicated previously. Then immediately touch the reset wire from pin 4 to ground. Note the LED result: _____________

10. With a DC voltmeter, measure the output voltage at pin 3 during the one shot's off and on states. What are your values?

OFF: __________ volts ON: ___________ volts.

11. Replace the 10 MegOhm resistor with a 1 MegOhm resistor and repeat steps 5 and 6. Record your timed and calculated results:

Timed: ________ seconds Calculated: _________seconds

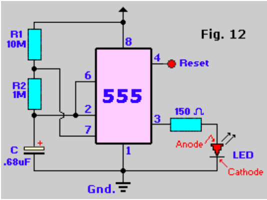

Fig. 12

If you want to get fancy, after you've completed the experiment you can replace the resistors with potentiometers to build a variable function generator and play with that to learn more.

12. Next you will experiment with astable circuits. First, rewire the circuit so it appears as shown in Fig. 12.

13. Apply power to the circuit and observe the LED. What is happening?

Answer: ____

14. Replace the 10 MegOhm resistor with a 1 MegOhm resistor. Again observe the LED. Is the frequency higher or lower? _________________

15. Using the formula given in the tutorial, calculate the oscillation frequency using R1 as 10 MegOhm, and again with R1 as 1 MegOhm, and again with R1 as 10 MegOhm. R2 is 1 MegOhm in both cases. Record your freq's:

f = _____________ Hz (R1 = 10 MegOhm)

f = _____________ Hz (R1 = 1 MegOhm)

16. Calculate the period, t1 and t2, and the duty-cycle for each resistor value:

10 MegOhm: t = ___________ t1 = ____________ t2 = ____________

1 MegOhm: t = ___________ t1 = ____________ t2= ____________

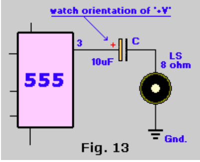

Fig. 13

Monitoring the timer with a speaker can be amusing if you switch capacitors or resistors to make an organ.

17. Rewire the circuit making R1 and R2 10,000 ohms (10K) and C equal to 0.1µF. Use the same circuit in Fig. 12. But, replace the LED and its resistor with a speaker and capacitor as shown in Fig. 13.

18. Apply power to the circuit and note the result: ______________________

19. Calculate the frequency of the circuit: f = ____________________ Hz

20. If you have an oscilloscope, monitor the output voltage on pin 3. Disconnect the speaker and note the output. Also, observe the capacitor charge and discharge at pin 6 or 2: _____________________________

Review of steps 1 through 20:

The circuit you built for those steps was a one-shot multi-vibrator. The circuit is similar to that described in the tutorial. The trigger input is held high with a 10,000 ohm resistor. When you bring pin 2 low, by touching the wire to ground, the one-shot is fired. The LED installed at the output of the 555 is used to monitor the output pulse. The LED goes on when the one-shot is triggered.

The component values selected for the circuit are large, so as to generate a long output pulse. That allows you to measure the pulse duration with a stop watch. Once the one-shot is triggered, the output LED stays on until the capacitor charges to 2/3 of the supply voltage. That triggers the upper comparator and causes the internal control flip-flop to reset, turning off the pulse and discharging the capacitor. The one-shot will remain in that state until it is triggered again.

Timing the pulse should have produced an output duration of approximately 7.5 seconds. Calculating the output time interval using the formula given previously, you found the pulse duration to be:

$$t = 1.1 \times .68 \times 10^{-6} \times 10^{7} = 7.48 \text{ seconds}$$

You may have notice some difference between the calculated and actual measured values. The differences probably result from inaccuracies in your timing. Further more, component tolerances may be such that the actual values are different from the marked values.

In **steps 8 and 9** you demonstrated the reset function. As you noticed, you could terminate the output pulse before the timing cycle is completed by touching pin 4 to ground. That instantly resets the flip-flop and shuts off the output pulse.

In **step 10**, you measured the output voltage. When off, the output is only a fraction of a volt. For all practical purposes it is zero. When triggered, the 555 generates a 3.5 volt pulse with a 5-volt supply. If you used another value of supply voltage, you would probably have discovered that the output during the pulse is about 1.5 volt less than the supply voltage.

In **step11**, you lowered the resistor value to 1 Megohm. As you noticed, that greatly shortens the output pulse duration. The LED only stayed on for a brief time; so brief in fact that you probably couldn't time it accurately. The calculated duration of the output pulse is 0.748 seconds.

The circuit you built for **steps 12 - 20** was an astable multi-vibrator. The astable circuit is an oscillator whose frequency is dependent upon the R1, R2, and C values. In **step 13**, you should have found that the LED flashed off and on slowly.

The oscillation frequency is 0.176 Hz. That gives a period of:

$$t = 1/f = 1/.176 = 5.66 \text{ seconds}$$

Since R1 is larger than R2, the LED will be **on** for a little over 5 seconds and it will stay **off** for only 0.5 seconds. That translates to a duty-cycle of:

$$D = t1/t = 5.18/5.66 = .915 \text{ or } 91.5\%$$

In **step 14**, you replaced the 10 MegOhm resistor with a 1 MegOhm resistor making both R1 and R2 equal. The new frequency is 0.706 Hz, much higher than in **step 13**. That translates to a period of 1.41 seconds. Calculating the t1 and t2 times, you see that the LED is on for 0.942 second and off for 0.467 second. That represents a duty-cycle of:

$$D = 0.942/1.41 = 0.67 \text{ or } 67\%$$

In **step 17**, you made R1 = R2 = 10,000 ohm (10K) and C = 0.1uF. That increased the frequency to 480Hz. The result should have been a loud tone in the speaker.

If you had used an oscilloscope, you saw the output to be a distorted rectangular wave of about 2 volts peak-to-peak. That distortion is caused by the speaker load. Removing it makes the waveform nice and square and the voltage rises to about 5 volts peak-to-peak. The capacitor waveform is a combination of the classical charge and discharge curves given earlier.

The time is useful in computer, function generators, clocks, music synthesizers, games, flashing lights, printers, scanners and the list goes on and on.

Example Circuits:

I have placed a couple of 555 circuit examples below for your convenience. Play with different component values and use the formulas mentioned earlier to calculate your results. Things to remember: For proper monostable operation with the 555 timer, the negative-going trigger pulse width should be kept short compared tot he desired output pulse width. Values for the external timing resistor and capacitor can either be determined from the previous formulas. However, you should stay within the ranges of resistances shown earlier to avoid the use of large value electrolytic capacitors, since they tend to be leaky. Otherwise, tantalum or mylar types should be used. (For noise immunity on most timer circuits I recommend a 0.01uF (10nF) ceramic capacitor between pin 5 and ground.) In all circuit diagrams below I used the LM555CN timer IC from National, but the NE555 and others should not give you any problems.

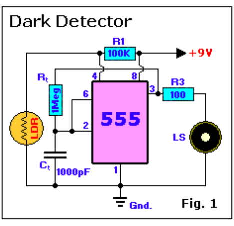

Fig. 1

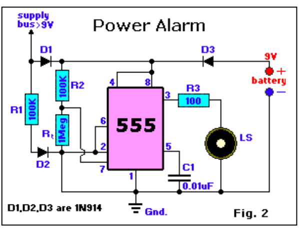

Fig. 2

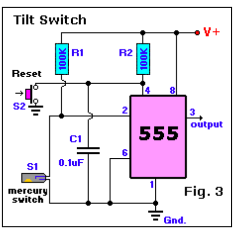

Fig. 3

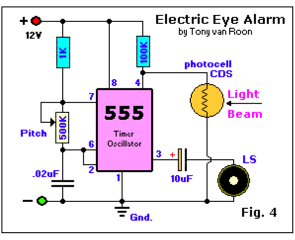

Fig. 4

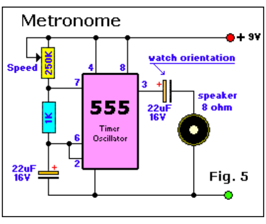

Fig. 5

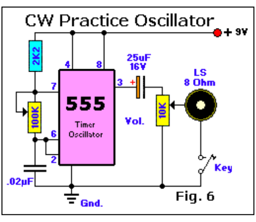

Fig. 6

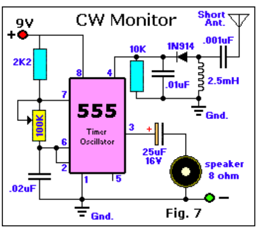

Fig. 7

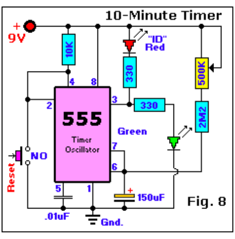

Fig. 8

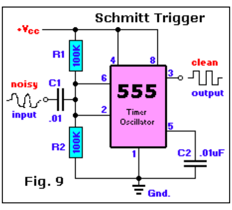

Fig. 9

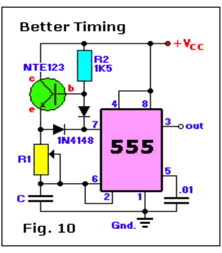

Fig. 10

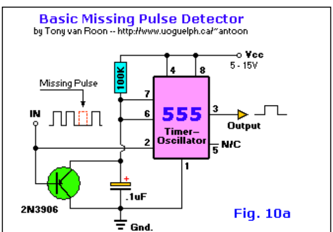

Fig. 10a

This circuit is a one-shot that is continually retriggered by incoming pulses. A missing pulse that prevents retriggering before a timing cycle is complete, causes pin 3 to go low until a new input pulse arrives. R1 & C1 control the response time. Use in alarms, continuity testers, beacons, R/C, etc.

Circuits 1 to 10a:

Play with different indicating devices such as bells, horns, lights, relays, or whatever (if possible). Try different types of LDR's. If for any reason you get false triggering, connect a ceramic 0.01uF (=10nF) capacitor between pin 5 (555) and ground. Keeping the basic rules of the 555 timer, try different values for Ct and Rt (or the C & R over pins 2, 6 & 7) Replace Rt with a 1 megohm potentiometer if you wish. Make notes of the values used and use the formulas to calculate timing. Verify your calculations with your timing.

Fig. 1, Dark Detector: It will sound an alarm if it gets too dark all over sudden. For example, this circuit could be used to notify when a lamp (or bulb) burns out. The detector used is a regular cadmium-sulphide Light Dependent Resistor or ***LDR***, for short, to sense the absence of light and to operate a small speaker. The LDR enables the alarm when light falls below a certain level.

Fig. 2, Power Alarm: This circuit can be used as a audible 'Power-out Alarm'. It uses the 555 timer as an oscillator biased off by the presence of line-based DC voltage. When the line voltage fails, the bias is removed, and the tone will be heard in the speaker. R1 and C1 provide the DC bias that charges capacitor Ct to over 2/3 voltage, thereby holding the timer output low (as you learned previously). Diode D1 provides DC bias to the timer-supply pin and, optionally, charges a rechargeable 9-volt battery across D2. And when the line power fails, DC is furnished to the timer through D2.

Fig. 3 Tilt Switch: Actually really a alarm circuit, it shows how to use a 555 timer and a small glass-encapsulated mercury switch to indicate 'tilt'.
The switch is mounted in its normal 'open' position, which allows the timer output to stay low, as established by C1 on startup. When S1 is disturbed, causing its contacts to be bridged by the mercury blob, the 555 latch is set to a high output level where it will stay even if the switch is returned to its starting position. The high output can be used to enable an alarm of the visual or the audible type. Switch S2 will silent the alarm and reset the latch. C1 is a ceramic 0.1uF (=100 nano-Farad) capacitor.

Fig. 4, Electric Eye Alarm: The Electric-Eye Alarm is actually a similar circuit like the Dark Detector of Fig. 1. The same type of LDR is used. The pitch for the speaker can be set with the 500 kilo-ohm potentiometer. Watch for the orientation of the positive (+) of the 10uF capacitor. The '+' goes to pin 3.

Fig. 5, Metronome: A Metronome is a device used in the music industry. It indicates the rhythm by a 'toc-toc' sound which speed can be adjusted with the 250K potentiometer. Very handy if you learning to play music and need to keep the correct rhythm up.
Error fixed with thanks to ***Grant Fair*** in regards to the two resistors. (Grant also added a PNP power transistor to increase the volume and a led for visual as well as sound output).

Fig. 6, CW Practice Oscillator: CW stands for *'Continuous Wave'* or Morse-Code. You can practice the morse-code with this circuit. The 100K potmeter is for the 'pitch' and the 10K for the speaker volume. The "Key" is a morse code key.

Fig. 7, CW Monitor: This circuit monitors the morse code 'on-air' via the tuning circuit hookup to pin 4 and the short wire antenna. The 100K potmeter controls the tone-pitch.

Fig. 8, Ten-Minute Timer: Can be used as a time-out warning for Ham Radio. The Federal Communications Commission (FCC) requires the ham radio operator to identify his station by giving his call-sign at least every 10 minutes. This can be a problem, especially during lengthy conversations when it is difficult to keep track of time. The 555 is used as a one-shot so that a visual warning indicator becomes active after 10-minutes. To begin the cycle, the reset switch is pressed which causes the *'Green'* led to light up. After 10 minutes, set by the 500K potentiometer R1, the *'Red'* led will light to warn the operator that he must identify.

Fig. 9, Schmitt Trigger: A very simple, but effective circuit. It cleans up any noisy input signal in a nice, clean and square output signal. In radio control (R/C) it will clean up noisy servo signals caused by rf interference by long servo leads. As long as R1 equals R2, the 555 will automatically be biased for any supply voltage in the 5 to 16 volt range. (Advanced Electronics: It should be noted that there is a 180-degree phase shift.) This circuit also lends itself to condition 60-Hz sine-wave reference signal taken from a 6.3 volt AC transformer before driving a series of binary or divide-by-N counters. The major advantage is that, unlike a conventional multivibrator type of squares which divides the input frequency by 2, this method simply squares the 60-Hz sine wave reference signal without division.

Fig. 10, Better Timing: Better and more stable timing output is created with the addition of a transistor and a diode to the R-C timing network. The frequency can be varied over a wide range while maintaining a constant 50% duty-cycle. When the output is **high**, the transistor is biased into saturation by R2 so that the charging current passes through the transistor and R1 to C. When the output goes **low**, the discharge transistor (pin 7) cuts off the transistor and discharges the capacitor through R1 and the diode. The high & low periods are equal. The value of the capacitor (C) and the resistor (R1 or potmeter) is not given. It is a mere example of how to do it and the values are pending on the type of application, so choose your own values. The diode can be any small signal diode like the NTE519, 1N4148, 1N914 or 1N3063, but a high conductance Germanium or Schottky type for the diode will minimize the diode voltage drops in the transistor and diode. However, the transistor should have a high beta so that R2 can be large and still cause the transistor to saturate. The transistor can be a TUN (europe), NTE123, 2N3569 and most others.

Fig. 10a, Missing Pulse Detector (Basic): This transistor can be replaced with a ECG or NTE159. This is just a basic model but works. Experiment with the values of Resistor and Capacitor. A good example would be the **'Crashed Aircraft Locator'** beacon used in radio control. If there is no signal it sees it as a missing pulse and sounds buzzer.

The following circuits are examples of how a 555 timer IC assist in combination with another **I**ntegrated **C**ircuit. Again, don't be afraid to experiment. Unless you circumvent the min and max parameters of the 555, it is very hard to destroy. Just have fun and learn something doing it.

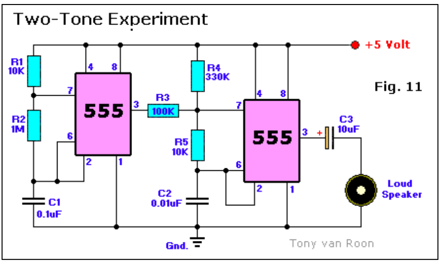

Fig. 11

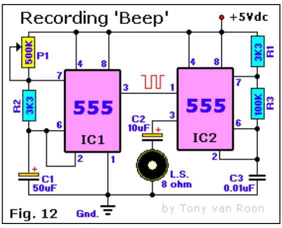

Fig. 12

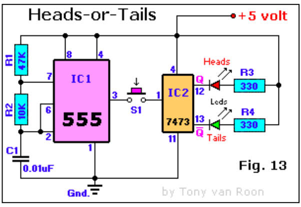

Fig. 13

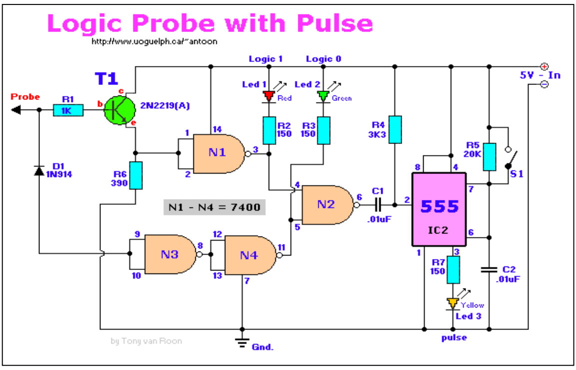

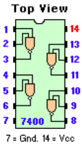

Circuits 11 to 14:

Play with different indicating devices such as bells, horns, lights, relays, or whatever (if possible). Try different types of LDR's. If for any reason you get false triggering, connect a ceramic 0.01uF (=10nF) capacitor between pin 5 (555) and ground. In all circuit diagrams below I used the LM555CN timer IC from National. The 555 timer will work with any voltage between 3.5 and 15volt. A 9-volt battery is usually a general choice. Keeping notes is an important aspect of the learning process.

Fig. 11, Two-Tones: The purpose of this experiment is to wire two 555 timers together to create a 2-note tone. If you wish, you can use the dual 556 timer ic.

Fig. 12, Recording Beep: This circuit is used to keep recording of telephone conversations legal. As you may know, doing otherwise without consent of the other party is illegal. The output of IC1 is fed to the 2nd 555's pin 3 and made audible via C2 and the speaker. Any 8-ohm speaker will do.

Fig. 13, Coin Toss: Electronic 'Heads-or-tails' coin toss circuit. Basically a **Yes** or **No** decision maker when you can't make up your mind yourself. The 555 is wired as a Astable Oscillator, driving in turn, via pin 3, the **7473** flip-flop. When you press S1 it randomly selects the 'Heads' or 'Tails' led. The leds flashrate is about 2Khz (kilo-Hertz), which is much faster than your eyes can follow, so initially it appears that both leds are 'ON'. As soon as the switch is released only one led will be lit.

Fig. 14, Logic Probe: Provides you with three visible indicators; "Logic 1" (+, red led), "Logic 0" (-, green led), and "Pulse" (yellow led). Good for TTL and CMOS. The yellow or 'pulse' led comes on for approximately 200 mSec to indicate a pulse without regards to its width. This feature enables one to observe a short-duration pulse that would otherwise not be seen on the logic 1 and 0 led's. A small switch (subminiature slide or momentary push) across the 20K resistor can be used to keep this "pulse" led on permanently after a pulse occurs.
In operation, for a logic 0 input signal, both the '0' led and the pulse led will come 'ON', but the 'pulse' led will go off after 200 mSec. The logic levels are detected via resistor R1 (1K), then amplified by T1 (NPN, Si-AF Preamplifier/Driver), and selected by the 7400 IC for what they are. Diode D1 is a small signal diode to protect the **7400** and the leds from excessive inverse voltages during capacitor discharge.
For a logic '1' input, only the logic '1' led (red) will be 'ON'. With the switch closed, the circuit will indicate whether a negative-going or positive-going pulse has occurred. If

the pulse is positive-going, both the '0' and 'pulse' led's will be on. If the pulse is negative-going, the '1' and 'pulse' led's will be on.
Error Fix: Switch position was modified. Please read document for details.

INPUTS			OUTPUTS	
Pin 4 (LOW)	Pin 6 (HIGH)	Pin 2 (LOW)	National LM555H	Signetics NE555V
⊔	0	1	Resets ʃ	Resets ʃ
⊔	1	1	0	0
⊔	0	0	⊔	⊔
⊔	1	0	0	⊔
1	⊓	1	Resets	Resets
1	⊓	0	⊔	1
0	⊓	1	0	0
0	⊓	0	0	0
1	0	⊔	sets ʃ	sets ʃ
1	1	⊔	0	⊓
0	0	⊔	0	0
0	1	⊔	0	0

Pin 2 = Trigger, Pin 4 = Reset, Pin 6 = Threshold
Pin 2, 4, and 6 are 'active'
Table 2.

Check the listing in Table 2. It shows some variations in the 555 manufacturing process by two different manufacturers, National Semiconductor and Signetics Corporation. Since there are other manufacturers then those two I suggest when you build a circuit to stick with the particular 555 model they specify in the schematic.
Unless you know what you're doing of course... [grin].

The absolute maximum ratings (in free air) for NE/SA/SE types are:

```
                         Vcc, supply voltage: 18V
Input voltage (CONT, RESET, THRES, TRIG): Vcc
                              Output current: 225mA
(approx)
              Operating free-air temp. range:
NE555...........   0°C - 70°C
SA555........... -40°C - 85°C
SE555, SE555C... -55°C - 125°C
           Storage temperature range: -65°C - 150°C
Case temperature for 60sec. (FK package): 260°C
```

Suggested Reading:

1. 555 Timer IC Circuits. Forrest M. Mims III, Engineer's Mini Notebook. Radio Shack Cat. No: 62-5010.
"Create & experiment with pulse generators, oscillators, and time delays."

2. IC Timer Cookbook. Walter G. Jung. Published by Howard W. Sams & Co., Inc. ISBN: 0-672-21932-8.
"A reference 'must' for hobby, technicians, and engineers."

3. The 555 Timer Applications Sourcebook. Howard M. Berlin. Published by Sams Inc. ISBN: 0-672-21538-1.
"Learn how to connect the 555, perform 17 simple experiments."

Last updated: July 29, 2004

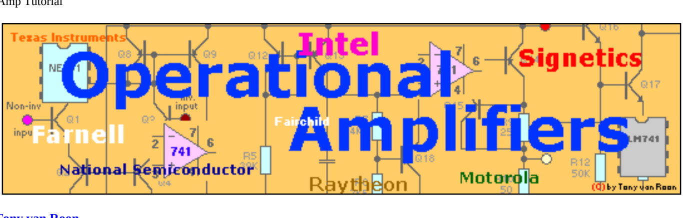

© by Tony van Roon

What exactly is an **OP**erational **AMP**lifier? Let's define what that component is and look at the parameters of this amazing device. An operational amplifier IC is a solid-state integrated circuit that uses external feedback to control its functions. It is one of the most versatile devices in all of electronics. The term 'op-amp' was originally used to describe a chain of high performance dc amplifiers that was used as a basis for the analog type computers of long ago. The very high gain op-amp IC's our days uses external feedback networks to control responses. The op-amp without any external devices is called 'open-loop' mode, referring actually to the so-called 'ideal' operational amplifier with infinite open-loop gain, input resistance, bandwidth and a zero output resistance. However, in practice no op-amp can meet these ideal characteristics. And as you will see, a little later on, there is no such thing as an ideal op-amp. Since the LM741/NE741/µA741 Op-Amps are the most popular one, this tutorial is direct associated with this particular type. Nowadays the 741 is a frequency compensated device and although still widely used, the Bi-polar types are low-noise and replacing the old-style op-amps.

Let's go back in time a bit and see how this device was developed. The term "operational amplifier" goes all the way back to about 1943 where this name was mentioned in a paper written by John R. Ragazzinni with the title "Analysis of Problems in Dynamics" and also covered the work of technical aid George A. Philbrick. The paper, which was defined to the work of the U.S. National Defense Research Council (1940), was published by the IRE in May 1947 and is considered a classic in electronics. It was around 1947 that the Operational Amplifier concepts were originally advanced. The very first series of modular solid-state op-amps were introduced by Burr-Brown Research Corporation and G.A. Philbrick Researches Inc. in 1962. The op-amp has been a workhorse of linear systems ever since.

At the left you see a picture of a K2-W tubes general purpose computing Op-Amp from George A. Philbrick Researches. This type was first introduced in 1952, more than a decade before the first transistorized version. The op-amp is shown with and without its bakelite shell. What a beauty! The first solid-state monolithic op-amp, designed by Bob Widlar, offered to the public in 1963 was the µA702 manufactured by Fairchild Semiconductors but it had very weird supply voltages such as +12 and -6 volts and had a tendency to burn out when it was temporarily shorted. Despite all these little shortcomings this device was the best in its day. It contained just nine transistors and sold for about $300.00 US which limited the sales to the Military and Aerospace consumers.
In 1965 the next major change was introduced in op-amp design by Bob Widlar with the µA709 from Fairchild Semiconductor. It had higher gain, a larger bandwidth, lower input current, and a more user-friendly supply voltage requirement of approximately +/- 15 Volt DC. The tremendous success of the 709 was associated with high production demands causing rapid and steep price reductions. This particular op-amp, introduced at about $70, was the first to break the $10 barrier and again not much later the $5 barrier. By 1969, op-amps were selling for around $2.

The outrageous success of the µA709 emboldened Bob Widlar to request a significant enhancement in his compensation. When his request was denied by his boss, Charles Sporck, Widlar left Fairchild in 1966 to join the young National Semiconductor. Ironically, one year later, Sporck became president of National Semiconductors and so again becoming Widlar's boss. However, this time Sporck had to accept Widlar's compensation package, which allowed Bob Widlar to retire in 1970 just before his 30th birthday. Widlar worked briefly in 1980 for Linear Technology and continued to produce designs for National Semiconductors on a consulting basis for the rest of his life.

Under the brilliant guidance and futuristic view again of Bob Widlar, National Semiconductor decided to jump on the bandwagon with the release of a more versatile op-amp version in the form of the LM101 in 1967. It had a an increased gain (up to 160K) and operation range. One of the nicest features of the LM101 was 'short-circuit' protection, and simplified frequency compensation. This was accomplished by placing an external capacitor across selected connection pins. The first op-amp to provide this internally was the hybrid LH101, which was basically a LM101 with a capacitor in a single package.
But Fairchild was not done yet. It introduced in May 1968 an internally compensated op-amp called the µA741. However, the differences between their LM101 and the µA741 were very slight. Frequency compensation is accomplished using an 'on-chip' capacitor. Offset null is accomplished by adjustment of currents in input stage emitters. On the LM101, Offset is achieved by adjusting current in input stage collectors.
In December 1968, an improved version of the LM101, the LM101A, was devised. This device provided better input control over the temperature and lower Offset currents.
National Semiconductor introduced the LM107, which had the frequency compensation capacitor built into the silicon chip. The LM107 came out at the same time as the LM101A.
In 1968, Fairchild Semiconductor issued the µA748. The device had essentially the same performance characteristics as the µA741. The difference was external frequency compensation.
The first multiple op amp device was Raytheon Semiconductor's RC4558 in 1974. Characteristics of this new device are similar to the µA741 except that the latter uses NPN input transistors. Later in that same year, the LM324 quad op amp from National Semiconductor became public to the delight of manufacturing industry and hobbyist alike. It is similar in characteristics in comparison with the µA741 in speed and input current. The LM324 is especially useful for low-power consumption. The beauty of this chip, according to some engineers, is its single-power-supply requirement.

Now the snowball was rolling. The first FET input op amp was the CA3130 made by RCA. With this addition to the op-amp family, extremely low input currents were achieved. Its power can be supplied by a +5 to +15vdc single supply system. A beautiful piece of work this CA3130.
In July 1975, National Semiconductor came out with the J-FET type LF355. This was the first device created using ion implantation in an op amp.
Texas Instruments introduced the TL084 op amp in October 1976. It is a quad JFET input op amp; it also is an ion-implant JFET. Low bias current and high speed are two of its beautiful attributes.

In dated sequence, the op-amp developed like this: 1963-µA702, 1965-µA709, 1967-LM101/LH101, 1968-µA741, 1974-RC4558/LM324, 1975-CA3130/LF355, and in 1976 the TL084... wow! Most of the mentioned op-amps have of course been replaced over time, keeping the same model number, with cleaner and low-noise types. Meaning, the cutting laser of the early 60's was not of the same quality and as narrow as the 70's or the 80's, etc. Other companies like RCA discontinued their semiconductor line all together.

Today, and since that month in 1976, the types of op amps have increased almost daily. We now enjoy a variety of op amps that will provide the user essentially with anything s/he needs, such as high common-mode rejection, low-input current frequency compensation, cmos, and short-circuit protection. All a designer has to do is expressing his needs and is then supplied with the correct type. Op-Amps are continually being improved, especially in the low-noise areas.

Shown in Fig.1 at the right are op-amp symbols as used today. The one on the right is an older way of drawing it but still used in books like the ARRL (**A**merican **R**adio **R**elay **L**eaque) and older schematics. It is common practice to omit the power supply connections as they are implied.

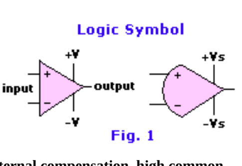

Fig. 1

Absolute Maximum Parameters:

Maximum means that the op-amp can safely tolerate the maximum ratings as given in the data section of such op-amp without the possibility of destroying it.
The µA741 is a high performance operational amplifier with high open loop gain, internal compensation, high common mode range and exceptional temperature stability. The µA741 is short-circuit protected and allows for nulling of the offset voltage. The µA741 is Manufactured by Fairchild Semiconductor.

Max Ratings	Fig. 2
Supply voltage	±18Volts
Internal Power Dissipation	500mW
Differential Input Voltage	±30Volt
Input voltage	±15Volt
Voltage Offset Null/V-	±0.5Volt
Operating Temperature Range	0°to +70°C
Storage Temperature Range	-65° to +150°C
Lead Temperature, Solder, 60sec.	300°C
Output Short Circuit	Indefinite

Supply Voltage (+/-Vs): The maximum voltage (positive and negative) that can be safely used to feed the op-amp.
Dissipation (P_d): The maximum power the op-amp is able to dissipate, by specified ambient temperature (500mW @ 80° C).

Differential Input Voltage (V_{id}): This is the maximum voltage that can be applied across the + and - inputs.

Input Voltage (V_{icm}): The maximum input voltage that can be simultaneously applied between both input and ground also referred to as the common-mode voltage. In general, the maximum voltage is equal to the supply voltage.

Operating Temperature (T_a): This is the ambient temperature range for which the op-amp will operate within the manufacturer's specifications. Note that the military grade version (µA741)has a wider temperature range than the commercial, or hobbyist, grade version (µA741C).

Output Short-Circuit Duration: This is the amount of time that an op-amp's output can be short-circuited to either supply voltage.

Summed-up Features:

- Internal Frequency Compensation
- Short Circuit Protection
- Offset voltage null capability
- Excellent temperature stability
- High input voltage range
- NO latch-up

Input Parameters:

1. **Input Offset Voltage (V_{oi})**
   This is the voltage that must be applied to one of the input pins to give a zero output voltage. Remember, for an ideal op-amp, output offset voltage is zero!
2. **Input Bias Current (I_b)**
   This is the average of the currents flowing into both inputs. Ideally, the two input bias currents are equal.
3. **Input Offset Current (I_{os})**
   This is the difference of the two input bias currents when the output voltage is zero.
4. **Input Voltage Range (V_{cm})**
   The range of the common-mode input voltage (i.e. the voltage common to both inputs and ground).
5. **Input Resistance (Z_i)**
   The resistance 'looking-in' at either input with the remaining input grounded.

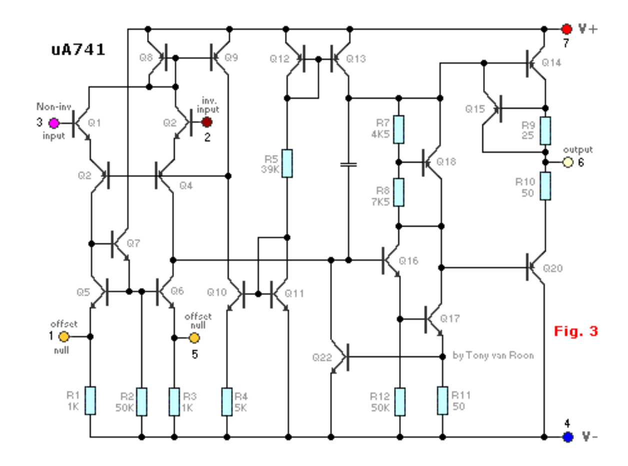

[illegible]

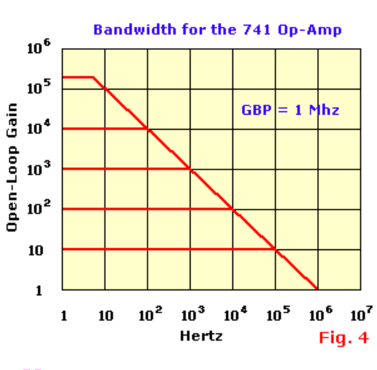

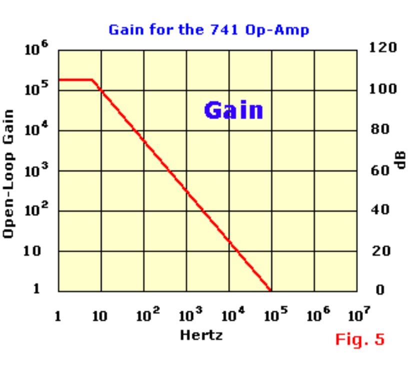

[illegible]

rise time

Open-Loop Gain:

Lets have a look how the 'ideal' amplifier would look like in Fig. 5-1. The search for an ideal amplifier is, of course, a futile exercise. The characteristics of the operational amplifier are good enough, however, to allow us to *treat* it as ideal. Below are some amplifier properties that make this so. (Please realize that these ratings are next to impossible to achieve).

1. Gain--infinite
2. Input impedance--infinite
3. Output impedance--zero
4. Bandwidth--infinite
5. Voltage out--zero (when voltages into each other are equal)
6. Current entering the amp at either terminal--extremely small

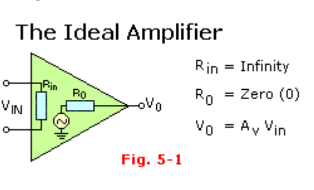

Fig. 5-1

The "operation" referred to mathematical operations, such as addition, integration, etc. An exact equivalent of the ideal Op-Amp is called a "nullor" and it is composed of new elements -- the *nullator* and the *norator*. The input to the op-amp is the nullator (i.e. no voltage or current), while the output is the norator (i.e. any voltage or current). These two components give the device its ideal characteristics.

Power Supply:

In general op-amps are designed to be powered from a dual or bipolar voltage supply which is typically in the range of +5V to +15Vdc *with respect to ground*, and another supply voltage of -5V to -15Vdc with respect to ground, as shown in Fig. 7. Although in certain cases an op-amp, like the LM3900 and called a 'Norton Op-Amp', may be powered from a single supply voltage.

Electrical Ratings:

Electrical characteristics for op-amps are usually specified for a certain (given) supply voltage and ambient temperature. Also, other factors may play an important role such as certain load and/or source resistance. In general, all parameters have a typical minimum/maximum value in most cases.

Fig. 6 - The two most common types are shown in the diagram on the right. Depending on the application, the 8-pin version is used the most, worldwide. Actually, there is a third type in the form of a metal-can but is obsolete and, by my knowledge, no longer used. I have two of these metal-can types and keep them as a 'gone-by' memory.

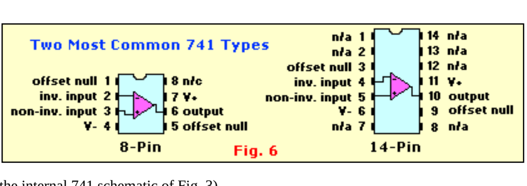

Fig. 6

Definition of 741-pin functions: (Refer to the internal 741 schematic of Fig. 3)

Pin 1 (Offset Null): Offset nulling, see Fig. 11. Since the op-amp is the differential type, input offset voltage must be controlled so as to minimize offset. Offset voltage is nulled by application of a voltage of opposite polarity to the offset. An offset null-adjustment potentiometer may be used to compensate for offset voltage. The null-offset potentiometer also compensates for irregularities in the operational amplifier manufacturing process which may cause an offset. Consequently, the null potentiometer is recommended for critical applications. See 'Offset Null Adjustment' for method.

Pin 2 (Inverted Input): All input signals at this pin will be inverted at output pin 6. Pins 2 and 3 are very important (obviously) to get the correct input signals or the op amp can not do its work.

Pin 3 (Non-Inverted Input): All input signals at this pin will be processed normally without inversion. The rest is the same as pin 2.

Pin 4 (-V): The V- pin (also referred to as Vss) is the negative supply voltage terminal. Supply-voltage operating range for the 741 is -4.5 volts (minimum) to -18 volts (max), and it is specified for operation between -5 and -15 Vdc. The device will operate essentially the same over this range of voltages without change in timing period. Sensitivity of time interval to supply voltage change is low, typically 0.1% per volt. (Note: Do not confuse the -V with ground).

Pin 5 (Offset Null): See pin 1, and Fig. 11.

Pin 6 (Output): Output signal's polarity will be the opposite of the input's when this signal is applied to the op-amp's inverting input. For example, a sine-wave at the inverting input will output a square-wave in the case of an inverting comparator circuit.

Pin 7 (posV): The V+ pin (also referred to as Vcc) is the positive supply voltage terminal of the 741 Op-Amp IC. Supply-voltage operating range for the 741 is +4.5 volts (minimum) to +18 volts (maximum), and it is specified for operation between +5 and +15 Vdc. The device will operate essentially the same over this range of voltages without change in timing period. Actually, the most significant operational difference is the output drive capability, which increases for both current and voltage range as the supply voltage is increased. Sensitivity of time interval to supply voltage change is low, typically 0.1% per volt.

Pin 8 (N/C): The 'N/C' stands for 'Not Connected'. There is no other explanation. There is nothing connected to this pin, it is just there to make it a standard 8-pin package.

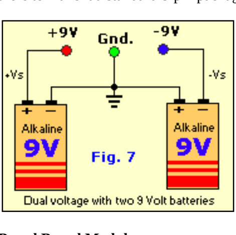

Fig. 7

Experiments:

You are given the opportunity to play with and analyze experiments to demonstrate the principles, concepts, and applications of a couple of these basic configured op-amps.
If you have already a dual-voltage power supply (positive/negative), that would make things allot easier for you. If not, build this **Dual Volt Powersupply** listed at the bottom of the page to get you started. This power supply has two non-adjustable voltages; +12Vdc and -12Vdc. However, in general, a very simple and cheap power supply can be rigged up with two 9 Volt alkaline batteries and does the job in most, if not all, cases. Personally I like to approach a project more professionally and build the dual 12 volt powersupply. Nice project 'in-between' while learning op-amps.

Bread Board Modules:

A bread board module, or just 'breadboard', is a board manufactured of plastic with a couple 100 tiny holes with tiny sockets in them connected electrically together and in the center of the breadboard a grove to hold a plastic panel for leds, pots and switches. They measure about 6 by 2 inches and come in white, gray and blue. The blue kind is called 'BimBoard' and made in the UK. I purchased mine back in 1980 from ElectroSonic in Toronto Canada and its still working fine. The gray and white models are manufactured in the U.S. and Canada. They all work. Radio Shack and the European Tandy are both selling their own version and they work fine too. The Bread Board Design System is also available, if you can afford it, and would be preferred if you intend to do a lot more experimenting in the future. This system contains everything you need already build-in, like the powersupply, jacks, switches, leds, function generator and lots more goodies. Kindah nice to have everything in one place.

The Norton Op-Amp:

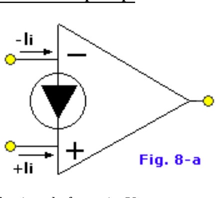

Fig. 8-a

It is not my intention to confuse you with a different type of op-amp so I will just mention a couple points about this op-amp.
The Norton op-amp, or current-differencing amplifier, is designed to operate from a single ended supply. Wow, that is truly fantastic. You can use a voltage anywhere from +4V to a whopping +36V!

Fig. 8-b	741	3900
Supply Voltage, V	+15	+4 to+36
Gain, Open Loop	200,000	2800
f_{t1}, Mhz	1.0	1.0
I_{b1}, uA	80	30
Z_I, M-ohm	2.0	1.0
Z_O, ohm	75	8 K
Slew Rate, V/uSec	0.5	0.5

The Norton op-amp referred to here is the LM3900 and is the best known type made by National Semiconductor. This chip contains four op-amps in a single 14-pin package. The picture in Fig. 8-a shows the symbol for the Norton op-amp. As you may notice it is somewhat different than the normal op-amp symbol. Fig. 8-b shows the major parameters of relevance between the LM741 and the LM3900 op-amps.

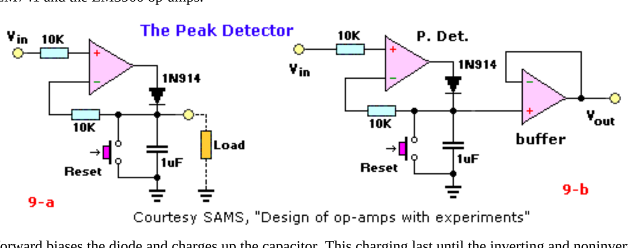

The Peak Detector
The peak detector is a circuit that "remembers" the peak value of a signal. As shown in Fig. 9-a, when a *positive* voltage is fed to the noninverting input after the capacitor has been momentarily shorted (reset), the output voltage of the op-amp forward biases the diode and charges up the capacitor. This charging last until the inverting and noninverting inputs are at the same voltage, which is equal to the input voltage. When the noninverting input voltage exceeds the voltage at the inverting input, which is also the voltage across the capacitor, the capacitor will charge up to the new peak value. Consequently, the capacitor voltage will always *be equal to the greatest positive voltage applied to the noninverting input.*
Once charged, the time that the peak detector "remembers" this peak value is typically several minutes and depends on the impedance of the load that is connected to the circuit. Consequently, the capacitor will slowly discharge towards zero. To minimize this rate of discharge, a voltage follower can be used to buffer the detector's output from any external load, as shown in Fig. 9-b. Momentarily shorting the capacitor to ground will immediately set the output to zero.

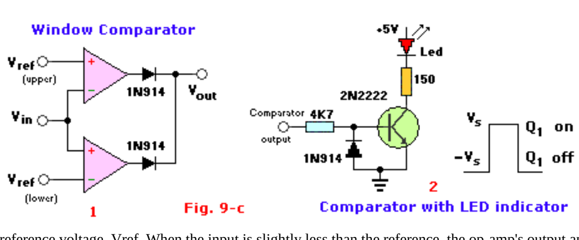

The Comparator
A 'comparator' is circuit that compares an input voltage with a reference voltage. The output of the comparator then indicates whether the input signal is either above or below the reference voltage. As shown for the basic circuit in Fig. 9-c(1) , the output voltage approaches the positive supply voltage when the input signal is slightly greater than the reference voltage, Vref. When the input is slightly less than the reference, the op-amp's output approaches the negative supply voltage. Consequently, the exact threshold is dominated by the op-amp's input offset voltage, which should be nulled out. Fig. 9-c(2) shows a Led indicator which input is connected to the output *Vout* of the comparator.

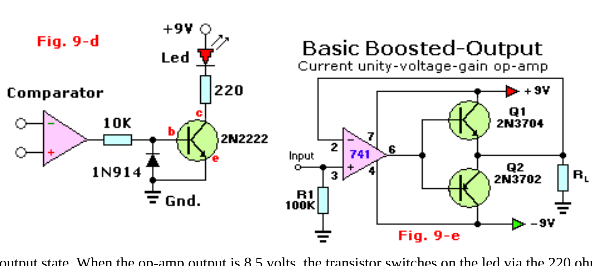

Fig. 9-d(left) The output polarity of the op-amp switches from positive to negative, it is inconvenient to keep reversing the voltmeter leads to keep polarity correct. One way to overcome that problem is to use an indicator light to tell the output state. The circuit show on the left uses a transistor to switch a led on or off depending on the comparator's output state. When the op-amp output is 8.5 volts, the transistor switches on the led via the 220 ohm current-limiting resistor. When the output is -8.5 volts the transistor is cut-off turning off the led. Transistor choice is not critical; it can be any common type NPN device. Any type of silicon diode will protect the transistor. Fig. 9-e(right). The output on pin 6 switches (repeatedly) from positive to negative and so either bias Q1 (NPN) or Q2 (PNP and activates R_L which is the resistive load. Just a basic circuit to show you what exactly a 'Boosted-Output' circuit does.

The Instrumentation Amplifier

There are many types of op-amps who are designed for a specific purpose like the Instrumentation Amplifier from Burr-Brown.(see Fig. 10) In this example we are talking about the 3660J type. It can be used in both balanced and unbalanced systems, like a Wheatstone Bridge circuit. This does not mean in any way that the instrumentation amp cannot be used for other applications, on the contrary, it is in many a case preferred because of the unique parameters of this device.

Keep this in mind as a rule-of-thumb:
An operational amplifier circuit will not work ***at all*** unless:
1. External feedback limits the gain or desired response to a design value.
2. Both inputs have direct-current return path to ground of a similar reference.
3. The input frequencies and required gain are well within the performance limitations of the op-amp used.

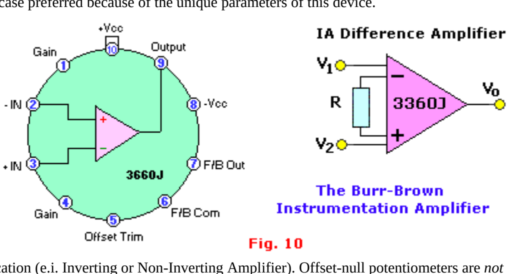

Fig. 10

Offset Null Adjustment Procedure for the µA741:
Offset null adjustments differ with the application (e.i. Inverting or Non-Inverting Amplifier). Offset-null potentiometers are *not* placed on design schematics as they would detract from a design. For practice, perform the following Offset Null adjustment if you wish:

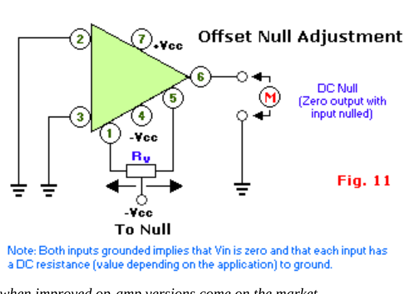

Fig. 11

1. Adjust the 10K pot(entio)meter to its center position.
2. Connect the potmeter outside leads between pins 1 and 5 of the op-amp.
Make sure that the power is applied to the design application.
3. Connect the wiper of the potmeter to the negative supply voltage.
4. Ensure that input signals are zero or null and that pins 2 and 3 have a dc return to ground.
5. Measure the output with a dc meter and obtain zero null by adjusting the potentiometer.

This is just one method and recommended nulling procedure for the µA741 type op-amp. Always look for, and follow the particular procedure as specified by that chip manufacturer. Procedures may become obsolete or updated and changed when improved op-amp versions come on the market.

Burr-Brown:

Look at this beauty at the right. It is a 20-pin 3656AG Isolation Amplifier made by Burr-Brown. Just wanted to show the chip because of its uniqueness. This gem measures about 22 x 28mm and is part of my personal collection. The engineers of Burr-Brown have surely done a marvelous job more than once.

Planning Your Prototype or Experiment:

Planning the layout of your experiments could be important, especially with large circuits. Use this [lay-out sheet] to plan your components layout on the bread board, if you wish. Remove every component and all wires from previous experiments.
Important: Before starting to insert components into the breadboard, make sure all power and signal connections are removed and the power source disconnected. And if required, take the glue/dirt of the components' legs before inserting them into the sockets, it is very hard if not impossible to get it cleaned out.

A couple circuit examples:

Below are a couple circuit examples you can play and experiment with to understand the working of a 741 op-amp hands on. If you are serious about electronics I strongly recommend buying a book or two about Op-Amps for your experimenting pleasures.

Fig. 12 - Light Sensor
This is a really nice circuit to play with. When there is NO light falling on the sensor, the relay closes. When light falls on the LDR, the relay opens. To reverse the situation just exchange LDR and R1. Example uses for this circuit: Dark-room, Automatic door-lock, closet, Shed Alarm, etc.

Fig. 13 - Smart Continuity Tester
Occasionally you need a continuity test between two points in an electronic circuit. Unfortunately, most continuity testers are prone to "lie". They don't do that deliberately, but if they see a small resistance, they *still* tell you that you have continuity. They just don't know any better. This unit is different. If you have continuity it will tell you so. And if you're reading even a low resistance through a component, the unit will tell you that as well. The unit uses two 741 op-amps. It offers a short-circuit test current of less than 200uA. It detects resistance values of less than 10 ohms. Nicest of all, it will not break down a PN junction. The device has come in handy in my own shop for debugging electronic circuits.

Fig. 14 - 12V Battery Monitor
The 100 Kilo-ohm trimmer pot controls the set point of this circuit to a 'high' point like 12.5 or something, so adjust it to the point you wish the LED to light up. To monitor a 'low' point, and have the led light up when the battery has drained to a certain point, connect the led (via the 330 ohm resistor) to ground (in the blue-boxed area). The led is the high-brightness or ultra-bright type for maximum visibility. The trimpot in the schematic is a 10-turn type for better accuracy, but basically any type will do.

Fig. 15 - Low Power Amplifier
This is a simple low power amplifier with a single powersupply. The Rx resistor + the resistance of the speaker should equal 1000 ohm. Example: speaker is 150 ohm. Rx is 1000 - 150 = 850 ohm. Closest available value is 860 ohm. I know what your thinking; what about the 30 volt? Isn't the max 15 volt? Yes, but positive and negative they combine 30 volt.

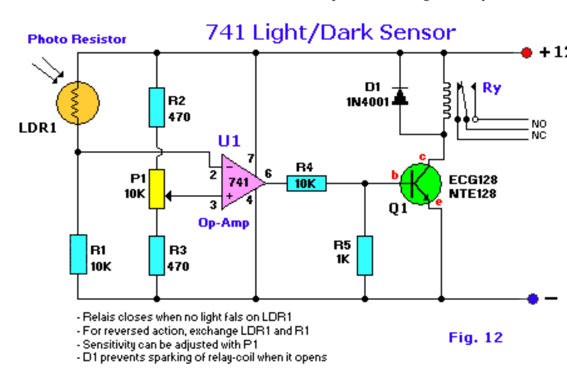

Fig. 12

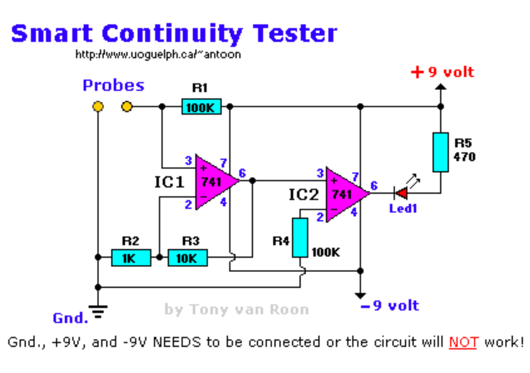

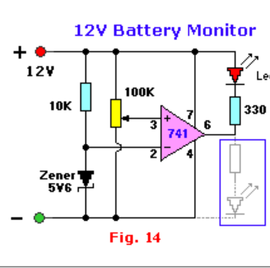

Fig. 14

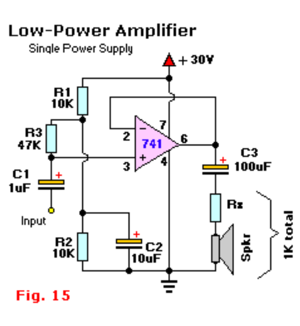

Fig. 15

Below is the Dual Volt Power Supply to power the op-amps. Check the output voltages when you are done. You may lower the 220µF caps to 100µF if need be.

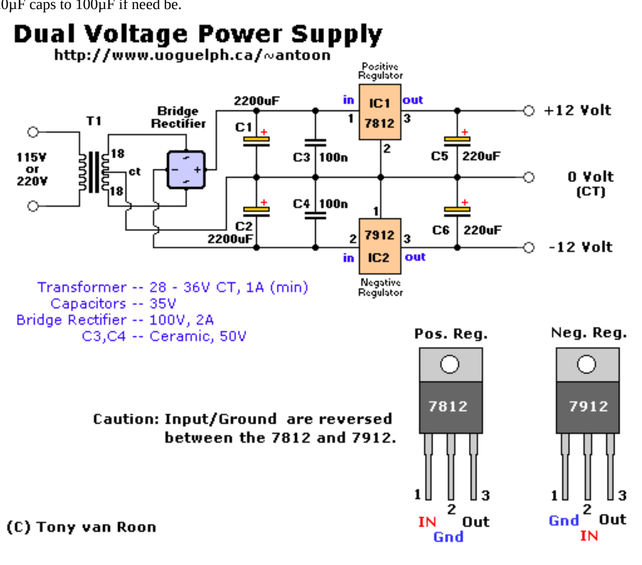

Suggested Reading:

"Active Filter Cookbook", *by Don Lancaster, 1975, by Howard W. Sams & CO., Publisher SAMS, ISBN: 0-672-21168-8*
"CDA--The New Current Differencing Amplifier", *by W.G. Jung, June 1973, Popular Electronics, pp. 61-66.*
"Design of OP-AMP Circuits With Experiments"*, H.M Berlin, 1987, Howard W. Sams & Co., Inc. Publisher SAMS. ISBN: 0-672-21537-3*
"IC Op-Amp Cookbook", *by W.G. Jung, 1974, by Howard W. Sams & CO., Publisher SAMS.*
"Introductory Experiments in Digital Electronics", *by H.M.Berlin (Book 1&2), Howard W. Sams & Co., Inc. Publisher SAMS.*
"Logic & Memory Experiments using TTL Integrated Circuits", *by H.M.Berlin (Book 1&2), Howard W. Sams & Co., Inc. Publisher SAMS.*
"Operational Amplifiers--Design and Applications", *by G.E.Tobey, J.G.Graeme, and L.P.Huelsman, 1971. Publisher McGraw-Hill.*
"The Design of Active Filters, with Experiments", *by H.M.Berlin, 1974. Howard W. Sams & Co., Inc. Publisher SAMS.*
"Understanding IC Operational Amplifiers", *by R. Melen and H. Garland, 1971. Reston Publishing Co., Publisher RESTON.*
"The Art of Electronics", *by Horowitz and Hill, 1989, 2nd edition (3rd?), Cambridge University Press, ISBN: 0-521-37095-7.*

Copyright & Credits:

Some excerpts and graphics are used from SAMS Book "Design of Op-Amp Circuits With Experiments" written by Howard M. Berlin. Re-print with copyright permission obtained from: Pearson Education, Kiersti Kjonaas, Foreign Rights. 201 West 103rd Street Indianapolis, IN 46200-1007 -- U.S.A. Tel (317) 581-3500

The beautiful picture of the tube op-amp is published here with permission of Doug Coward, owner of the "Analog Computer Museum and History Center."

The text in 'The Ideal Op-Amp' was modified to reflect a comment from Don Petzold in regards to the Nullator and Norator. Good stuff Don, thanks very much!

Last Updated on July 29, 2004

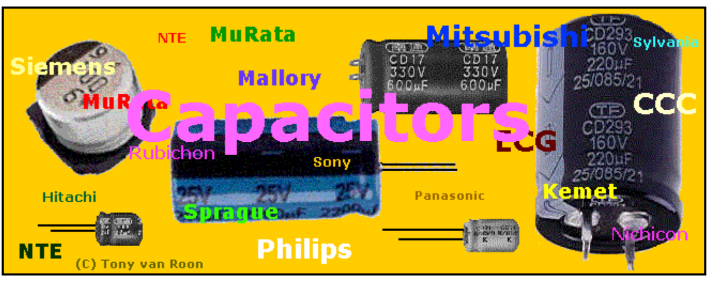

What Exactly Is A Capacitor?

Like my other tutorials, lets start with a bit of interesting history first to understand where the 'capacitor' or condensor came from and how it was developed and then work our way up to our century.

In 1745 a new physics and mathematics professor at the University of Leyden (spelled *Leiden* in modern Dutch), *Pieter van Musschenbroek (1692 - 1791)* and his assistants Allmand and Cunaeus from the Netherlands invented the 'capacitor' (electro-static charge or capacitance actually) but did not know it at first. His condenser was called the 'Leyden Jar' (pronounced: LY'duhn) and named so by Abbe Nollet. This Leyden jar consisted of a narrow-necked glass jar coated over part of its inner and outer surfaces with a conductive metallic substance; a conducting rod or wire passes through as insulating stopper (cork) in the neck of the jar and contacts the inner foil layer, which is separated from the outer layer by the glass wall. The Leyden jar was one of the first devices used to store an electric charge. If the inner layers of foil and outer layers of foil are then connected by a conductor, their opposite charges will cause a spark that discharges the jar. Actually, van Musschenbroek's *very* first *'condenser'* was nothing more than a beer glass!

By modern standards, the Leyden jar is cumbersome and inefficient. It is rarely used except in exciting laboratory demonstrations of capacitance, and exiting they are! Benjamin Franklin was acquainted with the Leyden Jar experiments also so he decided to test his ideas that 'charge' could also be caused by thunder and lightning. Franklin tested his theories, in Philadelphia in June 1752, via his now famous 'Electrical Fluid Theory' to prove that lightning was an electrical phenomenon. What he did was fly a kite which had a metal tip. The kite was tied with wet conducting thin hemp cord and at the end he attached a metal key to which a non-conducting silk string was attached which he held in his hand; when he held his knuckles near the key he could draw sparks from it. Although his experiment was completed successfully and the results as he had calculated before, the next couple people after him who tried the hazardous experiment were killed by lightning strikes. I guess Franklin was extremely lucky with his hazardous experiments. I myself believe in some sort of "time-line" in which inventions are invented 'no matter what'.

A similar device was invented independently by *Ewald Georg von Kleist, Dean of the Kamin Cathedral in Pomerania,* at about the same time (October 1745), but these facts were not published immediately at that particular time. As a matter of fact, van Musschebroek announced his discovery in January, 1746.
However, a letter dated February 4, 1745 appearing in *Philosophical Transactions* suggests that the jar existed in van Musschenbroek's laboratory almost a year before that date. There is still some residual controversy about this but the generally held opinion is: "Trembley, the editor, or the composer of the letter in PT either misdated the letter, or failed to translate properly into the new style (NS). Until 1752 the English began their legal year on March 25 so that, roughly speaking, their dates where a year behind continental ones for the first quarter of every continental year. This makes sense because there would be no reason for van Musschenbroek and his staff to delay announcing for 11 months, especial given the potential claim to prior discovery by Von Kleist.

Look at the picture at the right; the worlds first illustration of the working of a Leyden Jar, by Abbe Jean-Antoine Nollet!

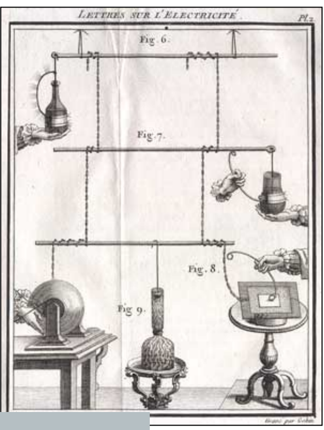

Trembley's letter is fascinating as it is one of the earliest first-hand accounts of this new discovery. He happened to be in Holland about the time of the discovery and his letter was the first word to England of the marvelous new jar.

Georg von Kleist tried using an electrostatic generator to place a charge on an iron nail inside a small glass bottle. Again later in 1745, a lawyer by the name of *Anreas Cunaeus* who frequently visited one the laboratories at the University of Leiden, was trying to electrify water. He used a chain hanging into a flask of water, and brought the end of the chain into contact with an electrostatic generator. In both cases, after disconnecting the generator, the experimenter touched the metal nail or chain inside the flask with one hand while the other hand still surrounded the outside of the container, and got zapped with an electric shock as a result.

But van Musschenbroek and von Kleist were certainly not the only ones playing with static discharge or electromagnetism.
The Greeks, by means of Greek philosopher Thales of Miletus, had already determined that fact in around 600 BC by charging up Lodestone with a piece of amber and a sheeps skin. Lodestone (sometimes called *in*correctly Loadstone) was used in ancient times for navigation at sea. Another Greek philosopher, Theophrastus, stated that this power is possessed by other substances about three centuries later.
The first scientific study of electrical and magnetic phenomena, however, did not appear until AD 1600, when the researches of the English physician William Gilbert were published. Gilbert was the first to apply the term electric (Greek elektron, "amber") to the force that such substances exert after rubbing. He also distinguished between magnetic and electric action.

Capacitors (also called condensers) are funny things, creating enormous problems when troubleshooting for a fault and yet are absolutely necessary for almost every electronic circuit. They come in a variety of sizes, shapes, models, or if you so desire they can be manufactured by your specifications. They also come in a variety of materials, to name a few: Aluminum foil, Polypropylene, Polyester (Mylar), Polystyrene, Polycarbonate, Kraft Paper, Mica, Teflon, Epoxy, Oil-filled, Electrolyte, Tantalum, and the list goes on. Latest product (in research) is Niobium. The value of a capacitor can vary from a fraction of a pico-Farad to more than a million µFarad (µ means 'micro'). Voltage levels can range from a couple to a substantial couple hundred thousand volts. The largest capacitor in my own collection is 150.000 µF at 10Volts. A big sucker measuring about 10 x 5 inches! Does it still work? You bet! It will still zap the soles of your shoes... I use it on occasion to recondition shorted NiCad batteries which I use for my Radio Control gear.
The basic unit of capacitance is the **Farad**. Clumsy and not very practical to work with, capacitance is usually measured in microFarads, abbreviated µF, or picoFarads (pF). The unit Farad *is* used in converting formulas and other calculations. A µF (microFarad) is on millionth of a Farad (10^{-6} F) and a pF picoFarad is one-millionth of a microFarad (10^{-12} F).

What exactly is a 'Capacitor'? A capacitor is a device that stores an electrical *charge* or energy on it's plates. These plates (see Fig. 1), a positive and a negative plate, are placed very close together with an insulator in between to prevent the plates from touching each other. A capacitor can carry a voltage equal to the battery or input voltage. Usually a capacitor has more than two plates depending on the capacitance or dielectric type.

Fig. 1

The 'Charge' is called the amount of stored electricity on the plates, or actually the electric field between theses plates, and is proportional to the applied voltage and capacitor's 'capacitance'.
The Formula to calculate the amount of capacitance is **Q = C * V** where:

- Q = Charge in Coulombs
- C = Capacitance in Farads
- V = Voltage in Volts

There is also something else involved when there is 'charge', something stored called 'Energy'.
The formula to calculate the amount of energy is: $\mathbf{W = V^2 * C / 2}$ where:

- W = Energy in Joules
- V = Voltage in Volts
- C = Capacitance in Farads

Is it difficult or complicated to 'charge' a capacitor? Not at all. Put proper voltage on the legs of the capacitor and wait till current stops flowing. It goes very fast. Do NOT exceed the capacitor's working breakdown voltage or, in case of an electrolytic capacitor, it *will* explode. The break down voltage is the voltage that when exceeded will cause the dielectric (insulator) inside the capacitor to break down and conduct. If that happens the results can be catastrophic. And in case of a polarized capacitor, watch the orientation of the positive and negative poles. A healthy, good quality capacitor (disconnected) can hold a charge for a long time. From seconds to several hours and some for several days depending on its size. A capacitor, in combination with other components, can be used as a filter that blocks DC or AC, being it current, frequency, etc.

An interesting experiment for a classroom. Try to build another capacitor than the Leyden Jar yourself too. Cut two long strips of aluminum, say 1" wide by 48" long (25mm x 120mm). Cut a strip of paper which is 1.5" by 50" (38mm x 125mm). Make sure the paper is dry. The paper is a bit wider and longer then the foil to prevent the strips of foil from touching each other when you roll them up. Take two small metal paperclips and 'unbend' them. One paperclip/strip aluminum foil is designated 'Positive' and other one 'Negative'. Carefully roll up (all at once) the strips. One paperclip (or wire) goes with it. First layer is tin foil, second one is paper (the insulator), and third layer is tin foil again. When you're almost at the end, don't forget the insert the other paperclip (or wire) with it. Make sure the paper is dry or it won't work. Don't forget the paperclips (or wire) and make sure the two strips don't touch each other. When you have the whole thing rolled up *tightly as possible* secure it with tape or an elastic band or whatever.
Take a 9-volt battery and attach the negative (-) to one pole of the capacitor, and the other to your positive (+) pole. It only takes a fraction of a second to charge it up. You can check the charge by hooking up a voltmeter or if that is not available short the 'capacitor' and you should see a spark.

Capacitor Codes

I guess you really like to know how to read all those different codes. Not to worry, it is not as difficult as it appears to be. Except for the electrolytic and large types of capacitors, which usually have the value printed on them like 470µF 25V or something, most of the smaller caps have two or three numbers printed on them, some with one or two letters added to that value. Check out the little table below.

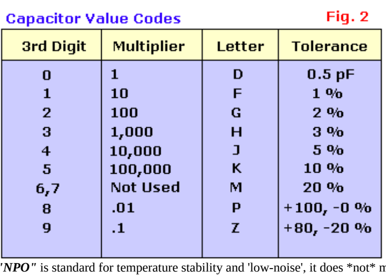
Capacitor Value Codes
Fig. 2

3rd Digit	Multiplier	Letter	Tolerance
0	1	D	0.5 pF
1	10	F	1 %
2	100	G	2 %
3	1,000	H	3 %
4	10,000	J	5 %
5	100,000	K	10 %
6,7	Not Used	M	20 %
8	.01	P	+100, -0 %
9	.1	Z	+80, -20 %

Have a look at Fig. 2 and Fig. 3. As you can see it all looks very simple. If a capacitor is marked like this **105**, it just means 10+5zeros = 10 + 00000 = 1.000.000pF = 1000 nF = 1 µF. And that's exactly the way you write it too. Value is in pF (PicoFarads). The letters added to the value is the tolerance and in some cases a second letter is the temperature coefficient mostly only used in military applications, so basically industrial stuff.

So, for example, it you have a ceramic capacitor with **474J** printed on it it means: 47+4zeros = 470000 = 470.000pF, J=5% tolerance. (470.000pF = 470nF = 0.47µF) Pretty simple, huh? The only major thing to get used to is to recognize if the code is µF nF, or pF.

Other capacitors may just have 0.1 or 0.01 printed on them. If so, this means a value in µF. Thus 0.1 means just 0.1 µF. If you want this value in nanoFarads just move the comma three places to the right which makes it 100nF. Easy huh?

"NPO" is standard for temperature stability and 'low-noise', it does *not* mean non-polarized even though you might think so because the abbreviation looks similar. Polarized ceramic capacitors do not exist. The abreviation "NPO" stands for "Negative-Positive-Zero" (what is read as an 'O' is actually zero), and means that the negative and positive temperature coefficients of the device are zero--that is the capacitance does not vary with temperature. *ONLY* the black top indicates NPO qualification and the values are in the range from 1.8pF to 120pF, unless manufactured with different values for Military and/or industrial purposes on special request. They feature 2% tolerance which comes down to about 0.25pF variation, and all are 100V types. You may sometimes find NPO-type caps marked witht he EIA (Electronic Industrial Association) code "COG". The EIA has an established set of specifications for capacitor temperature characteristics (EIC 384/class 1B). Thus, a capacitor labeled "Y5P" would exhibit a plus/minus tolerance of 10% variation in capacitance over a temperature range of -30°C. to +85°C. Or it may say N12 which translates to 120pF. Or 2P2 (2.2pF). I'm sure you get the idea...

But the average hobbyist uses only a couple types like the common electrolytic and general purpose ceramic capacitors and depending on the application, a more temperature stable type like metal-film or polypropylene.

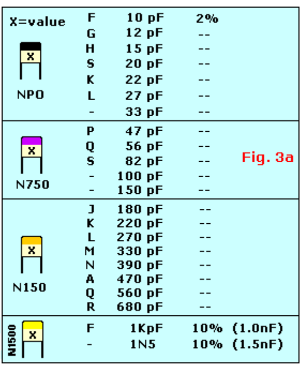
Fig. 3a

X=value NPO	F	10 pF	2%
	G	12 pF	--
	H	15 pF	--
	S	20 pF	--
	K	22 pF	--
	L	27 pF	--
	-	33 pF	--
N750	P	47 pF	--
	Q	56 pF	--
	S	82 pF	--
	-	100 pF	--
	-	150 pF	--
N150	J	180 pF	--
	K	220 pF	--
	L	270 pF	--
	M	330 pF	--
	N	390 pF	--
	A	470 pF	--
	Q	560 pF	--
	R	680 pF	--
N1500	F	1KpF	10% (1.0nF)
	-	1N5	10% (1.5nF)

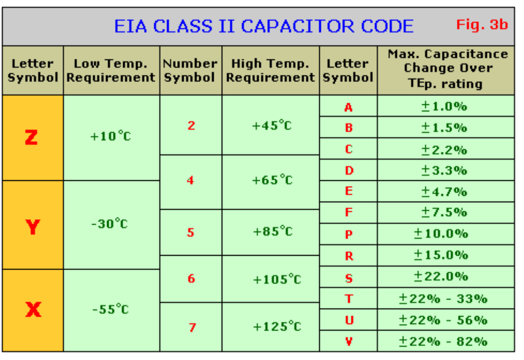
EIA CLASS II CAPACITOR CODE
Fig. 3b

Letter Symbol	Low Temp. Requirement	Number Symbol	High Temp. Requirement	Letter Symbol	Max. Capacitance Change Over TEp. rating
Z	+10°C	2	+45°C	A	±1.0%
				B	±1.5%
				C	±2.2%
		4	+65°C	D	±3.3%
Y	-30°C			E	±4.7%
		5	+85°C	F	±7.5%
				P	±10.0%
				R	±15.0%
X	-55°C	6	+105°C	S	±22.0%
				T	±22% - 33%
		7	+125°C	U	±22% - 56%
				V	±22% - 82%

Dielectric Constant of Materials

Air	1.00	Paper	3.00
Alsimag 196	5.70	Plexiglass	2.80
Bakelite	4.90	Polyethylene	2.30
Cellulose	3.70	Polystyrene	2.60
Fiber	6.00	Porcelain	5.57
Formica	4.75	Pyrex	4.80
Glass	7.75	Quartz	3.80
Mica	5.40	Steatite	5.80
Mycalex	7.40	Teflon	2.10

Fig. 4

The larger the plate area and the smaller the area between the plates, the larger the capacitance. Which also depends on the type of insulating material between the plates which is the smallest with air. (You see this type of capacitor sometimes in high-voltage circuits and are called 'spark-caps'.) Replacing the air space with an insulator will increase the capacitance many times over. The capacitance ratio using an insulator material is called ***Dielectric Constant*** while the insulator material itself is called just ***Dielectric***. Using the table in Fig. 4, if a Polystyrene dielectric is used instead of air, the capacitance will be increased 2.60 times.

Look below for a more detailed explanation for the most commonly used caps.

Electrolytic - Made of electrolyte, basically conductive salt in solvent. Aluminum electrodes are used by using a thin oxidation membrane. Most common type, polarized capacitor. Applications: Ripple filters, timing circuits. Cheap, readily available, good for storage of charge (energy). Not very accurate, marginal electrical properties, leakage, drifting, not suitable for use in hf circuits, available in very small or very large values in µF. They WILL explode if the rated working voltage is exceeded or polarity is reversed, so be careful. When you use this type capacitor in one of your projects, the rule-of-thumb is to choose one which is twice the supply voltage. Example, if your supply power is 12 volt you would choose a 24volt (25V) type. This type has come a long way and characteristics have constantly improved over the years. It is and always will be an all-time favorite; unless something better comes along to replace it. But I don't think so for this decade; polarized capacitors are heavily used in almost every kind of equipment and consumer electronics.

Tantalum - Made of Tantalum Pentoxide. They are electrolytic capacitors but used with a material called tantalum for the electrodes. Superior to electrolytic capacitors, excellent temperature and frequency characteristics. When tantalum powder is baked in order to solidify it, a crack forms inside. An electric charge can be stored on this crack. Like electrolytics, tantalums are polarized so watch the '+' and '-' indicators. Mostly used in analog signal systems because of the lack of current-spike-noise. Small size fits anywhere, reliable, most common values readily available. Expensive, easily damaged by spikes, large values exists but may be hard to obtain. Largest in my own collection is 220µF/35V, beige color.

Super Capacitors - The Electric Double Layer capacitor is a real miracle piece of work. Capacitance is 0.47 Farad (470,000 µF). Despite the large capacitance value, its physical dimensions are relatively small. It has a diameter of 21 mm (almost an inch) and a height of 11 mm (1/2 inch). Like other electrolytics the super capacitor is also polarized so exercise caution in regards to the break-down voltage. Care must be taken when using this capacitor. It has such large capacitance that, without precautions, it would destroy part of a powersupply such as the bridge rectifier, volt regulators, or whatever because of the huge inrush current at charge. For a brief moment, this capacitor acts like a short circuit when the capacitor is charged. Protection circuitry is a must for this type.

Polyester Film - This capacitor uses a thin polyester film as a dielectric. Not as high a tolerance as polypropylene, but cheap, temperature stable, readily available, widely used. Tolerance is approx 5% to 10%. Can be quite large depending on capacity or rated voltage and so may not be suitable for all applications.

Polypropylene - Mainly used when a higher tolerance is needed then polyester caps can offer. This polypropylene film is the dielectric.
Very little change in capacitance when these capacitors are used in applications within frequency range 100KHz.
Tolerance is about 1%.
Very small values are available.

Polystyrene - Is used as a dielectric. Constructed like a coil inside so not suitable for high frequency applications. Well used in filter circuits or timing applications using a couple hundred KHz or less. Electrodes may be reddish of color because of copper leaf used or silver when aluminum foil is used for electrodes.

Metalized Polyester Film - Dielectric made of Polyester or DuPont trade name "Mylar". Good quality, low drift, temperature stable. Because the electrodes are thin they can be made very very small. Good all-round capacitor.

Epoxy - Manufactured using an epoxy dipped polymers as a protective coating. Widely available, stable, cheap. Can be quite large depending on capacity or rated voltage and so may not be suitable for all applications.

Ceramic - Constructed with materials such as titanium acid barium for dielectric. Internally these capacitors are not constructed as a coil, so they are well suited for use in high frequency applications. Typically used to by-pass high frequency signals to ground. They are shaped like a disk, available in very small capacitance values and very small sizes. Together with the electrolytics the most widely available and used capacitor around. Comes in very small size and value, very cheap, reliable. Subject to drifting depending on ambient temperature. NPO types are the temperature stable types. They are identified by a black stripe on top.

Multilayer Ceramic - Dielectric is made up of many layers. Small in size, very good temperature stability, excellent frequency stable characteristics. Used in applications to filter or bypass the high frequency to ground. They don't have a polarity. *Multilayer caps suffer from high-Q internal (parallel) resonances - generally in the VHF range. The CK05 style 0.1µF/50V caps for example resonate around 30MHz. The effect of this resonance is effectively no apparent capacitance near the resonant frequency.
As with all ceramic capacitors, be careful bending the legs or spreading them apart to close to the disc body or they may get damaged.

Silver-Mica - Mica is used as a dielectric. Used in resonance circuits, frequency filters, and military RF applications.
Highly stable, good temperature coefficient, excellent for endurance because of their frequency characteristics, no large values, high voltage types available, can be expensive but worth the extra dimes.

Adjustable Capacitors - Also called trimmer capacitors or variable capacitors. It uses ceramic or plastic as a dielectric.
Most of them are color coded to easily recognize their tunable size. The ceramic type has the value printed on them. Colors are: yellow (5pF), blue (7pF), white (10pF), green (30pF), brown (60pf). There are a couple more colors like red, beige, and purple which are not listed here. Anyways, you get the idea...

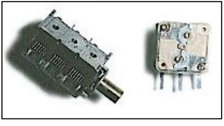

Tuning or 'air-core' capacitors.
They use the surrounding air as a dielectric. I have seen these variable capacitor types of incredible dimensions, especially the older ones. Amazing it all worked. Mostly used in radio and radar equipment. This type usually have more (air) capacitors combined (ganged) and so when the adjustment axel is turned, the capacitance of all of them changes simultaneously. The one on the right has a polyester film as a dielectric constant and combines two independent capacitors plus included is a trimmer cap, one for each side.

(C) The Capacitor Industries Companies

Combining Capacitors & Formula's:

Is it possible to combine capacitors to get to a certain value like we do with resistors? Certainly! Check below how go about it.

Capacitors in Parallel

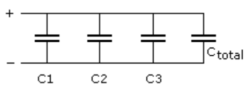

Capacitors connected in parallel, which is the most desirable, have their capacitance added together, which is just the opposite of parallel resistors. It is an excellent way of increasing the total storage capacity of an electric charge:

$$C_{total} = C_1 + C_2 + C_3$$

Keep in mind that only the total capacitance changes, *not* the supplied voltage. Every single capacitor will see the same voltage, no matter what. Be careful not to exceed the specified voltage on the capacitors when combining them all with different voltage ratings, or they may explode. Example: say you have three capacitors with voltages of 16V, 25V, and 50V. The voltage must not exceed the lowest voltage, in this case the 16V one. As a matter of fact, and a rule-of-thumb, always choose a capacitor which is twice the supplied input voltage. Example: If the input voltage is 12V you would select a 24V type (in real life 25V).

Capacitors in Series

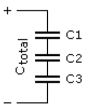

Again, just the opposite way of calculating resistors. Multiple capacitors connected in series with each other will have the total capacitance lower than the lowest single value capacitor in that circuit. Not the preferred method but acceptable.

For a regular two capacitor series combo use this simple formula: $C_{total} = \frac{C_1\ C_2}{C_1 + C_2}$

If you have two identical capacitors in series the formula is simplicity itself: $C_{total} = \frac{1}{2} C$

microFarads (µF)		nanoFarads (nF)		picoFarads (pF)
0.000001µF	=	0.001nF	=	1pF
0.00001µF	=	0.01nF	=	10pF
0.0001µF	=	0.1nF	=	100pF
0.001µF	=	1nF	=	1000pF
0.01µF	=	10nF	=	10,000pF
0.1µF	=	100nF	=	100,000pF
1µF	=	1000nF	=	1,000,000pF
10µF	=	10,000nF	=	10,000,000pF
100µF	=	100,000nF	=	100,000,000pF

Table 1. Capacitance Conversion

Things Capacitors Don't Like:

Capacitors are very fickle devices. There ae any number of conditions they don't like. Many type, for instance, lose a significant amount of their capacitance at high frequencies, making them unsuitable for RF applications. You also have to watch out for the inductance some may introduce in places where you don't want it. For that reason, some types of capacitors are indicated specifically as "non-inductive."
Temperature extremes are another thing to which capacitors, particularly electrolytics, are sensitive. Electrolytic capacitors, at elevated and at depressed temperatures, lose much of their capacitance. If you are going to operate electrolytics at extremes of temperature, make sure their tolerances extend to that temperature range.
Most capacitors do not care for alternating current either. It makes them overheat and--before they self-destruct--operate inefficiently. Polarized capacitors, as they already been pointed out, cannot tolerate reverse voltages. Not only does that meke them heat up, it can cause them--especially tantalum types--to heat up so rapidly that a sudden and violent explosion can result (most polarized capacitors are encase in tightly sealed containers).
Explosions can also result from polarized capacitors being installed "backwards" in a circuit. The cathode (negative) side of a polarized capacitor should always connect to ground.

Uncommon Capacitors:

Capacitors vary in size from microscopic to the enormous. At the small end of the scale, there are the capacitors that are deposited on a substrate during the manufacture of integrated circuits. Hybrid integrated circuits such as those containing tuned circuits may require very precise capacitor values--with tolerances that are impossible to achieve using any economically feasible straight manufacturing process.
The precise capacitances required are obtained by intentionally making the capacitors oversize, and then trimming them with a laser until the circuit of which they are apart resonates at exactly the right frequency.
At the other end of the scale, the enormous energy requirements of the acceleration dev ides used in subatomic-particle research are also met by capacitors--rooms full of them! One of the largest such devices, a particle accelerator located outside of Chicago, is said to be able to store enough energy to meet the electrical demand of the entire world! Of course, that's only for an instant during the discharge cycle, but the figure involve is still big enough to boggle the mind.

The Capacitor Future:

The future for capacitors looks good. A constant search is going on by companies like Murata, Kemet, etc. Kemet in particular is researching a new type of a dielectric substance called Niobium. Niobium Pentoxide (Nb_2O_5) offers a higher dielectric constant of 41 in comparison to Tantalum Pentoxide (Ta_2O_5) at 26. It implies that approximately 1.5 more CV (Capacitance x Voltage rating) can be obtained from the same amount of material, everything else being equal. What does this mean in plain english? Much smaller capacitors with larger capacity, especially important in surface mount technology. Recently, a new type capacitor with very high capacitance has been developed with capacitance designated in Farads! Yes, you read it well, Farads. This type of *Electric Double Layer* capacitor is known as a "Super Capacitor". I am sure we haven't heard the last of it about this type.

Copyright & Credits:

"Leyden Jars" and portrait of "van Musschenbroek". Reprint with permission from John D. Jenkins. More antique equipment and apparatus can be viewed at John's website called The Spark Museum. This website contains a treasure of information and pictures, from vacuum tubes to radio transmitters. If it is antique, John probably has it. I spend literally several weeks browsing and reading through his website. Amazing piece of work!

"Capacitor images on this page". Reprint with permission from Terence Noone, President of *The Capacitor Industries Companies* which consists of Motor Capacitors Inc., Chicago Condenser Corp., and SEI Capacitors Inc.
For detailed information please visit The Capacitor Industries Companies website.

Suggested Reading:
"The Radio Amateur Handbook" from the **A**merican **R**adio **R**elay **L**eaque (ARRL). Good resource.
"The Capacitor Book". by Cletus J. Kaiser., C.J. Publishing. ISBN: 0-9628525-3-8

Testing a MOSFET

Metal Oxide Semiconductor Field Effect Transistor

This testing procedure is for use with a digital multimeter in the diode test-range with a minimum of 3.3 volt over d.u.t. (diode-under-test). If your multi-meter is less than that it will not do the test. Check your meter manual for the specs.

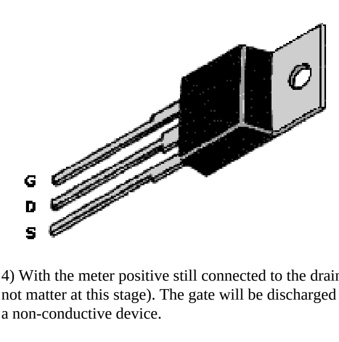

Connect the 'Source' of the MosFet to the meter's negative (-) lead.

1) Hold the MosFet by the case or the tab but don't touch the metal parts of the test probes with any of the other MosFet's terminals until needed. Do NOT allow a MOSFET to come in contact with your clothes, plastic or plastic products, etc. because of the high static voltages it can generate.

2) First, touch the meter positive lead onto the MosFet's 'Gate'.

3) Now move the positve probe to the 'Drain'. You should get a 'low' reading. The MosFet's internal capacitance on the gate has now been charged up by the meter and the device is 'turned-on'.

4) With the meter positive still connected to the drain, touch a finger between source and gate (and drain if you like, it does not matter at this stage). The gate will be discharged through your finger and the meter reading should go high, indicating a non-conductive device.

What the test above actually does is testing the cut-off voltage, which is basically the highest voltage put on the gate without making it conduct. Such a simple test is not 100% -- but is useful and usually adequate.

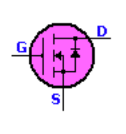

When MOSFETS fail they often go short-circuit drain-to-gate. This can put the drain voltage back onto the gate where ofcourse it feeds (via the gate resistors) into the drive circuitry, possibly blowing that section. It will also get to any other paralleled MosFet gates, blowing them also.
So, if the MosFets are deceased, check the drivers as well! This fact is probably the best reason for adding a source-gate zener diode; zeners fail short circuit and a properly connected zener can limit the damage in a failure! You can also add subminiature gate resistors -- which tend to fail open-circuit (like a fuse) under this overload, disconnecting the dud MosFet's gate.
Dying MOSFETS often emit flames or blow-out, even more so in hobby built electronics projects. What that means is that a defective unit can usually be spotted visually. They show a burned hole or 'something black' somewhere. I have seen them alot especially in ups's which can have as many as 8 or more mosfets in parallel. I always replace all of them if a couple are defective plus the drivers.

NEVER use one of those hand held solder-suckers (you know, the ones with a plunger) to desolder a HEX MOSFET. They create enough Electro Static Discharge to destroy a mosfet. Best method is using solder-wick or a professional 'ESD' safe desoldering station.

Below are a couple HexFET applications using an IRF511.

Fig. 1 is configured as a simple **Class-A Audio Amplifier**. With zero gate bias applied, Q1 is like switch in the off state, so no current flows through the load resistor R2. Ideally speaking, the voltage across Q1 and the load resistor should be equal for class-A operation. A 100K potentiometer (R3) and a 1-MegaOhm fixed resistor (R1) maker up a simple adjustable gate-bias circuit. Plase a voltmeter between the Drain (D) of Q1 and the circuit ground, and adjust R3 for a meter reading of half the power supply voltage.
Almost any resistor value can be used for R2 as long as the maximum current and power ratings of the FET are not exceeded. A resistor value between 22 and 100 ohms is a good choice for experimenting. At high currents, a suitable heat sink should be used.

Fig. 2 has the power FET setup as a **Relay-Controller**. With zero-gate bias applied, Q1 acts lilke an open switch, but when a DC voltage greater than 5 volts is applied to the input of the circuit, Q1 turns on, completing the relay circuits and therby activating the relay coil.
The input bias current required to turn on Q1 and operate the relay is less than 10 µA (microAmps), which is about 1/1,000,000 of the current required to bias the popular 2N3055 power transistor to operate the same relay.

Fig. 3 is shown as a regular **Incandescent Lamp Flasher** using two IRF511 HexFets which are configured as a simple astable multivibrator to alternately switch the two lamps, La1 and La2, on and off. The R & C values given set the flash rate to about 1/3 Hz. By varying either the resistor or capacitor values almost any flash rate can be obtainded. Increase either C1 and C2, or R1 and R2, and the flash rate slows. Decrease them and the rate increases.
Unlike most semiconductor devices, the power MosFet can be paralleled, without special current-sharing components, to control larger load currents. That can be an important feature when the device is used to turn on incandescent lamps, because the lamp's cold resistance is much lower than the normal operating resistance.
A typical #1815 12 to 14-volt lamp measures 6 ohms cold. When 12 volts is applied, the initial current drawn is 2 amps. The same lamp, when operating at 12 volts, requires only about 200mA. The hot resistance figures out to be ten times its cold resistance, or 60 ohms. That tidbit should be considered when picking any semiconductor device to control an incandescent lamp.
ERROR FIX: Q1's source (Fig.3) was shown connected to C2. Source should be connected to Ground (Gnd.) Corrected.

Fig. 4 is a **Proximity Switch**. This design takes advantage of the ultra-high input impedance and power-handling capabilities of the IRF511 to make a simple, but sensitive, proximity sensor and alarm driver circuit.
A 3x3-inch piece of circuit board (or similar size metal object), which functions as the pick-up sensor, is connected to the gate of Q1. A 100 MegaOhm resistor, R2, isolates Q1's gate from R1, allowing the input impedance to remain very high. If a 100-MegaOhm resistor cannot be located, just tie 5 22-MegaOhm resistors in series and use that combination for R2. In fact, R2 can be made even higher in value for added sensitivity.
Potentiometer R1 is adjusted to a point where the piezo buzzer just begins to sound off and then carefully backed off to the point where the sound ceases. Experimenting with the setting of R1 will help in obtainin the best sensitivity adjustment for the circuit. Potentiometer R1 may be set to a point where the pick-up must be contacted to set of the alarm sounder. A relay or other current-hungry component can take the place of the piezo sounder to control almost any external circuit.

Back to Circuits or Gadgets page.

Piezo Systems, Inc.

Educational Information

Practical Answers
Information for working with piezo elements and building prototypes

Introduction to Piezo Transducers
A mix of practical and technical information explaining the capabilities of and applications for piezo transducers

Application Data
Extensive technical information, including the relationship among variables for functional applications

Recommended Reading
A list of publications that provide further information.

Glossary
Includes alternate terms for piezo components & devices, as well as definitions for the symbols used on our site.

History of Piezoelectricity
The background basics from discovery to current applications.

186 Massachusetts Avenue · Cambridge, Massachusetts 02139 USA
Tel: 617.547.1777 · Fax: 617.354.2200 email: piezo@piezo.com

PIEZO SYSTEMS, INC.

Frequently Asked Questions

Physics Questions

- Why is there piezoelectricity?
- What is electric field?
- What is strain?
- What is elastic modulus (or Young's Modulus)?
- What is tensile strength?
- What is poling/depoling in piezoceramic materials?
- What is damping?
- Can piezoceramic actuators be used at cryogenic temperatures?
- What is the pyroelectric effect?

Handling & Preparation

- How do I cut up a sheet of piezoceramic into the size I want?
- How do I bond/attach piezoceramic sheet to a structure like an aluminum beam?
- Can I just use "superglue?"
- Are piezoceramic sheets fragile and easy to break?
- How do I make electrical contact to the side of the piezoceramic that is bonded down?
- How do I attach wire leads to the piezoceramic?
- How can I access the center shim?
- How do I hook up a bender element so it works?
- Can I etch or abrade the electrode coating?
- How far can I stretch a sheet before it breaks?
- How far can I bend a bimorph before it breaks?
- If a sheet loses some properties, can it be repoled?

Application Questions

- What is the frequency limit of piezoceramic sheet?
- What is the highest voltage that I can drive a piezoceramic sheet to?
- How much mechanical power can I get out of one sheet?
- How much electrical power can I get out of one piezo sheet, in principle?
- How much electrical power can be extracted from a typical piezo bender element in practice?
- Can piezo transducers be used for static applications?
- What is the expected fatigue life of piezoelectric material?
- Is a "spice model" available for piezo sensors?
- Can piezoceramic sheet be used to pick up vibrations in machinery?
- Can piezoceramic be used as a strain gage?
- How repeatable are the voltage outputs from a piezo strain gage?
- How repeatable is the motion of a piezo actuator?
- What are the effects of temperature on piezoceramic transducers?
- What is the resonant frequency of a piezoceramic sheet?
- Can I drive a piezo transducer with a "square wave?"

Piezo Technology

- Where in everyday life do I find piezo devices?
- How are piezoceramics used in vibration cancellation?
- Will piezo technology replace magnetic technology?

Physics Questions

Q. What is there piezoelectricity?	**A.** Because some atomic lattice structures have as an essential unit (or "cell") a cubic or rhomboid cage made of atoms, and this cage holds a single semi-mobile ion which has several stable quantum position states inside the cell. The ion's post ion state can be caused to shift by either deforming the cage (applied strain) or by applying and electric field. The coupling between the central ion and the cage provides the basis for transformation of mechanical strain to internal electric field shifts and vice versa.
Q. What is electric field?	**A.** An electric field is always associated with the presence of electric charges. It fills the space around the charge and is the mechanism of interaction between charges. A test particle with small known charge (Q) placed near a charge concentration will experience an accelerating force (F) due to the field. The value of the electric field (E) at that location is the ratio F/Q (a vector).
Q. What is strain?	**A.** When a solid object like a rod of length (L) is stretched to a new length (L + delta L), the strain in the rod is defined as the ratio (delta L)/(L). This is a dimensionless measure of stretching or compression often stated as "inches per inch", "millimeters per meter", or "microns per meter (microstrain)" for convenience of visualization.
Q. What is elastic modulus (or Young's modulus) ?	**A.**A material property of all elastic solids, Young's modulus (Y) is used to describe "stiffness" of materials. When rod or plate of cross section (A) and length (L) is pulled with force (F) resulting in an elongation (Δ L), the Young's modulus can be computed as follows: $Y = (L/A)*(F/\Delta L)$ In piezo applications Y is frequently used to estimate the equivalent spring constant of a rod or a plate of material that is in contact with a piezo actuator (F/ΔF).
Q. What is tensile strength?	**A.** Tensile strength is the stress (measured in Newtons/m^2 or psi) at which a sample of solid material will break from tension.
Q. What is poling/depoling in piezoceramic materials?	**A.** The piezoelectric property of ceramics does not arise simply from its chemical composition. In addition to having the proper formulation the piezoceramics must be subjected to a high electric field for a short period of time to force the randomly oriented micro-dipoles into alignment. This alignment by application of high voltage is called "poling". At a later time, if an electric field is applied in the opposite direction it exerts a "dislodging stress" on the micro-dipoles. Low level applied fields result in no permanent change in the polarization (it bounces back upon removal). Medium fields result in partial degradation of the polarization (with partial loss of properties). High applied fields result in repolarization in the opposite direction.
Q. What is damping?	**A.** 'Damping' is the term used for the general tendency of vibrating materials or structures to lose some elastic energy to internal heating or external friction.
Q. Can piezoceramic actuators be used at cryogenic temperatures?	**A.** Yes. All piezo actuators continue to function right on down to zero degrees Kelvin. This may seem counter-intuitive at first; however, you must remember that the basis for the piezoelectric effect is inter-atomic electric fields, and electric fields are not affected by temperature at all. Quantitatively, the piezo coupling of most common piezoceramics does decrease as temperature drops. At liquid helium temperatures, the motion of most materials drops to about one-seventh of that measured at room temperature.
Q. What is the pyroelectric effect?	**A.** The tendency of some materials to exhibit a change in internal electrical polarization state in response to a change in temperature. If the materials are equipped with electrodes on two surfaces, a voltage will arise between the electrodes in response to temperature shifts.

Handling & Preparation Questions

Q. How do I cut up a sheet of piezoceramic into the size I want?	**A.** Ceramic is best cut using a special diamond saw. Small prototype parts can be cut from piezoceramic sheet stock by using a razor blade and a straight edge to score the piezo surface and then making a controlled break. Even with practice this method does not yield straight-sided parts or repeatable cuts. Use at your own risk.
Q. How do I bond/attach piezoceramic sheet to a structure like an aluminum beam?	**A.** Cyanoacrylates and two part epoxies have proven useful in many applications. We suggest that you contact a manufacturer of these materials and explain your specific bonding requirements, including: 1. The metal surfaces to be joined 2. Temperature of operation 3. Any unusual shear stress requirements **Note: University of Missouri at Rolla has a very helpful section on this.**
Q. Can I just use 'superglue'?	**A.** Good quality temporary bonds may be made with cyanoacrylate (e.g. "super glue"). An added benefit of cyanoacrylate bonds is that the bond easily achieves electrical contact. The length of time the bond will last will be application dependent, from seconds to years. For a short time the performance of the part is very close to that achieved using the best bonds, which makes it useful for exploratory work.
Q. Are piezoceramic sheets fragile and easy to break?	**A.** Yes, they are very fragile! Single sheet piezoceramic should always be handled with great care. Dropping them almost always results in a shattered part. When two piezo sheets are bonded together with a metal shim between them, as most standard bending elements are, they become rugged enough to be dropped without being damaged.

Q. **How do I make electrical contact to the side of the piezoceramic that is bonded down?**	**A.** The most common method is to make a conductive bond between a metal substrate and the piezo part. Then one electrical lead is attached to the substrate, and one to the outward face of the piezoceramic sheet. In cases where a conductive bond is not possible (i.e. when the substrate is glass or plastic), a wire must be soldered to the "down" side of the ceramic at some location and a corresponding 'dish', 'cutout', or 'overhang' must be used to allow room for the wire when bonding the piezo sheet to the substrate.
Q. **How do I attach wire leads to the piezoceramic?**	**A.** All of the PSI piezoceramic parts come with a thin (~3000 Angstrom units) metallic electrode already on the ceramic. Wire leads can be soldered (use ordinary 60/40 resin core solder) anywhere on the electrode to suit the application/experiment. Most PSI ceramics have thin nickel electrodes and require the use of an additional liquid flux for uniform results. Our Solder/Flux Kit was designed to make this task much easier.
Q. **How can I access the center shim?**	**A.** Support the bender underneath; using a milling machine, take .001 - .002" passes to remove ceramic and expose center shim. Water can be used to lubricate the cutting.
Q. **How do I hook up a bender element so it works?**	**A.** This depends on how the two piezoceramic plates are polarized. If 5A-type, .0075" thick plates are poled for series operation (i.e. poling arrows pointing in opposite directions) then a wire is attached to each of the outer electrodes of the bender. ±180 volts is then applied between the wires. If the plates are poled for parallel operation (i.e. poling arrows pointing in the same direction) then the two outer electrodes are shorted together forming one lead, and a wire is attached to the center metal shim forming the second lead. ±90 volts may be applied between these leads. (See Tutorial)
Q. **How can I remove the electrode?**	**A.** You can chemically etch, sandblast, sandpaper, or laser ablate the electrode.
Q. **How far can I stretch a sheet before it breaks?**	**A.** A sheet can be stretched to a strain of approximately 500 microstrain (micrometers per meter) in regular use. Higher surface strains can be achieved, but the statistics of survival get worse. Proceed with caution.
Q. **How far can I bend a bimorph before it breaks?**	**A.** If a T220-type bender (.020" thick) is cantilevered to a distance of one inch, the tip can be pushed a distance of 0.055 inch before the bender is heard to "snap".
Q. **If a sheet loses some properties, can it be repoled?**	**A.** Yes. For 5H material, an electric field of 40 - 60 volts/mil will restore nearly all lost polarization. For 5A, use 50 - 100 volts/mil.

Application Questions

Q. **What is the frequency limit of piezoceramic sheet?**	**A.** There is no inherent frequency limit for a piezoceramic sheet. In practice the frequency limits of applications are usually determined by resonances associated with the shape and/or size of the transducer design. A typical 2.85" square, .0075" thick sheet of PSI-5A material has a thickness mode vibration in the neighborhood of 13 MHz and a planar dilatation mode at around 14 KHz. At ultrasonic frequencies large surface area parts draw considerable current and resistive heating of the electrodes becomes the limiting factor.
Q. **What is the highest voltage that I can drive a piezoceramic sheet to?**	**A.** For low frequency operation (0 to 5 KHz) a conservative recommendation for applied bi-polar voltage for a .0075" thick single sheet of PSI-5A ceramic is ±90 volts. Voltage applied in the poling direction only can be raised up to ~300 volts. Use caution!
Q. **How much mechanical power can I get out of one sheet?**	**A.** In theory, one standard PSI-5A sheet (1.5" x 2.5" x .0075") used as an "extender" can do .00035 joules of work on the outside world in a quasistatic cycle (i.e. a slowly executed sinusoidal cycle). When operated just under its first longitudinal resonance of 15 KHz, the theoretically available output power from the sheet would be around 5 watts. In practice it is difficult to collect more than 10% of this work. Resonant designs can be considerably more efficient.
Q. **How much electrical power can I get out of one piezo sheet in principle?**	**A.** Assuming that we stretch a PSI-5A (1.5" x 2.5" x .0075") sheet to ±500 microstrains quasistatically at a frequency just below its fundamental longitudinal resonance of 15 KHz, and that we collect 100% of the stored electrical energy at its height twice per cycle we would get approximately 9 watts of electrical power from the sheet. The mechanical energy input under these assumptions would be in excess of 100 watts. Resonant designs can be considerably more efficient. However, the mechanical apparatus for achieving the above mentioned 15 KHz high strain excitation is not available, and there is no known electronic method for extracting 100% of the available energy.
Q. **How much electrical power can be extracted from a typical piezo bender element in practice?**	**A.** A "Double Quick Mount" bending element bolted to a rigid surface provides a convenient demonstration of a cantilever mount generator. Applying 80 gram force to its tip at a frequency of 60 Hz produces an open circuit voltage of 15V peak between its two electrical leads. When the leads are connected to a 8 Kohm resistive load, the output to the load is 5.3 Vrms, representing a power output of 3.6 mW.
Q. **Can piezo transducers be used for force sensors?**	**A.** Piezo transducers are not suitable for static force measurements because of charge leakage. They can be used effectively for transient force measurements lasting less than 0.1 second.
Q. **What is the expected fatigue life of piezoelectric material?**	**A.** The "fatigue life" is pretty difficult to estimate; although we've had a piezo fan running constantly here since 1982, no conclusive tests have been done. It would depend on mounting, voltages, etc.
Q. **Is a "spice model" available for piezo sensors?**	**A.** We do not have any spice models. As you probably have guessed, for each new thing the piezo is glued to, a new "AC source" characteristic arises. With so many various applications for piezo, we do not have the resources to comment on application-specific questions.
Q. **Can piezoceramic sheet be used to pick up vibrations in machinery?**	**A.** Yes. Almost any size or shape of piezoceramic element will give off a measurable signal when fastened somewhere on machinery. See 'strain gages'.
Q. **Can piezoceramic sheet be used as a strain gage?**	**A.** Yes. Piezoceramic is one of the most sensitive strain gage technologies existent, and it is the only one which is self-powered.
Q. **How repeatable are the voltage outputs from a piezo strain gage?**	**A.** Outputs from piezoceramics which are 'following' surface vibrations are generally very repeatable and stable. If the sensor is initially calibrated it can be trusted for years of accurate service.
Q. **How repeatable is the motion of a piezo actuator?**	**A.** A piezoceramic actuator which is cyclically driven at a constant cycle time between the same two points will perfectly repeat its path every time. However, if the cycle time or either endpoint is changed, hysteresis and creep effects cause non-repeatable motions.
Q. **What are the effects of temperature on piezoceramic transducers?**	**A.** Temperature changes cause a voltage to appear across the electrodes of any piezo transducer. This is due to the pyroelectric properties of piezoceramic. Temperature also affects every property of piezoceramics (elastic, dielectric and piezoelectric coupling). There is no general trend. Each dependence must be looked up or better yet measured in the context of your experiment.
Q. **What is the resonant frequency of a piezoceramic sheet?**	**A.** There is no one 'resonance'. There are many resonances. The number of them and their location in the frequency spectrum depend on the shape and thickness of the part. For a flat sheet as shipped, three obvious resonances are the ones associated with the length, width, and thickness of the sheet.
Q. **Can I drive a piezo transducer with a 'square wave'?**	**A.** The answer is application dependent. If the square wave voltage is low (i.e., less than 30 V), then the answer is usually yes. If the square wave voltage is higher, there is a good chance for shockwave, damage, cracking, reduced life, or other failures. Careful control of the square wave rise time/fall time is the solution.

Piezo Technology Questions

Q. **Where in everyday life do I find piezo devices??**	**A.** All 'watch beepers' are piezoceramic audio transducers, most battery operated smoke detector alarms, fish finders, some cigarette lighters, many gas grill igniters.
Q. **How are piezoceramics used in vibration cancellation??**	**A.** Two piezoceramic sheets can be bonded directly to the surface of a structure (such as a strut, or beam) close to one another at a site where unwanted bending occurs. One is used to sense surface strain. The output from the strain sensor is fed into a "smart box" (which can be anything from a simple op-amp to an elaborate Digital Signal Processing computer) which in turn controls a power amplifier that drives the other piezoceramic sheet. Ideally the resulting mechanical contractions of the second piezo sheet inject a vibration into the structure which is equal and opposite of the initially detected one so that the net vibration is canceled.
Q. **Will piezo technology replace magnetic technology??**	**A.** No. Fundamentally, magnetic technology is based on a force which arises 'at a distance', without physical contact. Piezo technology is based on physical contact and elastic coupling. On an application by application basis one is usually better than the other. Take solenoid actuators as an example. Piezo actuators can be designed to replace almost any solenoid but they always come out bulkier and often heavier so it is unlikely that full scale replacement will ever occur. On the other hand, they always take much less power to operate; so in any application where power consumption is an issue, piezo actuators are preferred.

PIEZO SYSTEMS, INC.

Introduction to Piezo Transducers

Piezo Motors (Actuators)

Piezo Generators (Sensors)

Transducers convert one form of energy to another. **Piezo motors (actuators)** convert electrical energy to mechanical energy, and **piezo generators (sensors)** convert mechanical energy into electrical energy. In most cases, the same element can be used to perform either task.

Single sheets can be energized to produce motion in the thickness, length, and width directions. They may be stretched or compressed to generate electrical output.

Thin **2-layer elements** are the most versatile configuration of all. They may be used like single sheets (made up of 2 layers), they can be used to bend, or they can be used to extend. "Benders" achieve large deflections relative to other piezo transducers.

Multilayered piezo **stacks** can deliver and support high force loads with minimal compliance, but they deliver small motions.

PIEZO MOTORS (ACTUATORS)

Piezo motors convert voltage and charge to force and motion.

Single Layer Motors

Longitudinal and Transverse Motors:
When an electrical field having the same polarity and orientation as the original polarization field is placed across the thickness of a single sheet of piezoceramic, the piece expands in the thickness or "longitudinal" direction (i.e., along the axis of polarization) and contracts in the transverse direction (perpendicular to the axis of polarization). When the field is reversed, the motions are reversed. Sheets and plates utilize this effect. However, the motion of a sheet in the thickness direction is extremely small (on the order of tens of nanometers). On the other hand, the transverse motion along the length is generally larger (on the order of microns to tens of microns) since the length dimension is often substantially greater than the thickness. The transverse motion of a sheet laminated to the surface of a structure can induce it to stretch or bend, a feature often exploited in structural control systems.

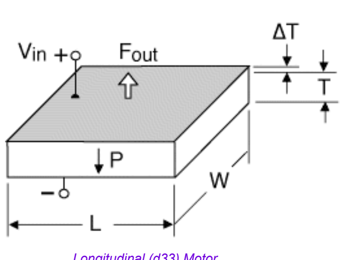

Longitudinal (d33) Motor

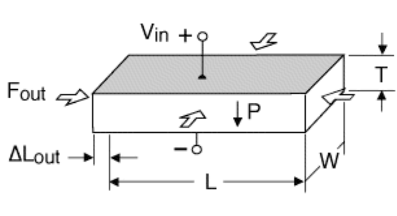

Transverse (d31) Motor, Contracting

2-Layer Motors

Two -layer elements can be made to elongate, bend, or twist depending on the polarization and wiring configuration of the layers. A center shim laminated between the two piezo layers adds mechanical strength and stiffness, but reduces motion. "2-layer" refers to the number of piezo layers. The "2-layer" element actually has nine layers, consisting of: four electrode layers, two piezoceramic layers, two adhesive layers, and a center shim. The two layers offer the opportunity to reduce drive voltage by half when configured for parallel operation.

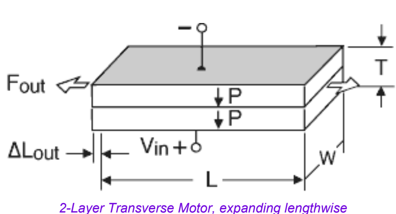

2-Layer Transverse Motor, expanding lengthwise

Extension Motors:
A 2-layer element behaves like a single layer when both layers expand (or contract) together. If an electric field is applied which makes the element thinner, extension along the length and width results. Typically, only motion along one axis is utilized. Extender motion on the order of microns to tens of microns, and force from tens to hundreds of Newtons is typical.

For extension motors of the same thickness:
Xf, Free Deflection ∝ L
Fb, Blocked Force ∝ W
Fr, Resonant Frequency ∝ l/L
C, Capacitance ∝ L x W

Bending Motors:
A 2-layer element produces curvature when one layer expands while the other layer contracts. These transducers are often referred to as benders, bimorphs, or flexural elements. Bender motion on the order of hundreds to thousands of microns, and bender force from tens to hundreds of grams, is typical.

These illustrations show several common bending configurations. The variety of mounting and motion options make benders a popular choice of design engineers.

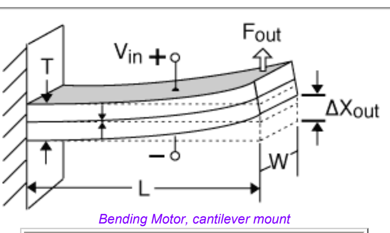

Bending Motor, cantilever mount

For cantilevered benders of the same thickness:
Xf, Free Deflection ∝ L^2
Fb, Blocked Force ∝ W/L
Fr, Resonant Frequency ∝ l/L^2
C, Capacitance ∝ L x W
Characteristics: End takes on an angle. Simple to mount.

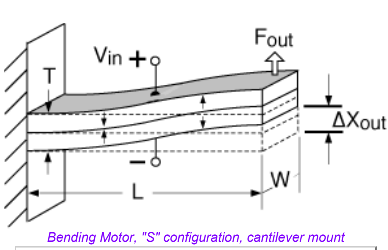

Bending Motor, "S" configuration, cantilever mount

To convert cantilever to "S" beam performance:
Xf = 1/2 x cantilever motion
Fb = 1/2 x cantilever force
Fr = same as cantilever frequency
C = same as cantilever capacitance
Characteristics: end moves up and down in a parallel plane

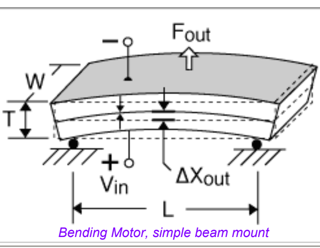

Bending Motor, simple beam mount

To convert cantilever to simple beam performance:
Xf = 1/4 X cantilever motion
Fb = 4X cantilever force
Fr = 3X cantilever frequency
C = same as cantilever capacitance
Characteristics: center moves up and down in a parallel plane.

Multi-Layer Motors

Any number of piezo layers may be stacked on top of one another. Increasing the volume of piezoceramic increases the energy that may be delivered to a load. As the number of layers grows, so does the difficulty of accessing and wiring all the layers. Typically, more than 4 layers becomes impractical.

Stack Motors: The co-fired stack seen below is a practical way to assemble and wire a large number of piezo layers into one monolithic structure. The tiny motions of each layer contribute to the overall displacement. Stack motion on the order of microns to tens of microns, and force from hundreds to thousands of Newtons is typical.

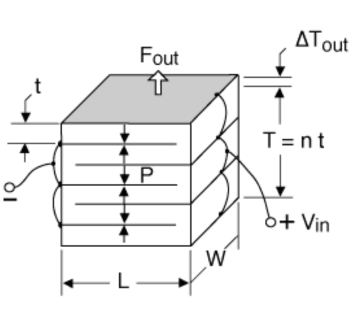

Motor Performance

Piezoelectric actuators are usually specified in terms of their free deflection and blocked force. Free deflection (X_f) refers to displacement attained at the maximum recommended voltage level when the actuator is completely free to move and is not asked to exert any force. Blocked force (F_b) refers to the force exerted at the maximum recommended voltage level when the actuator is totally blocked and not allowed to move. Deflection is at a maximum when the force is zero, and force is at a maximum when the deflection is zero. All other values of simultaneous displacement and force are determined by a line drawn between these two points on a force versus deflection line, as shown here.

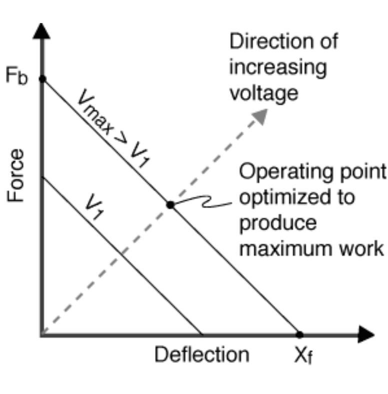

Generally, a piezo motor must move a specified amount and exert a specified force, which determines its operating point on the force vs. deflection line. An actuator is considered optimized for a particular application if it delivers the required force at one half its free deflection. All other actuators satisfying the design criteria will be larger, heavier, and consume more power.

PIEZO GENERATORS (SENSORS)

Piezo generators convert force and motion to voltage and charge.

Single Layer Generators

Longitudinal and transverse generators:
When a mechanical stress is applied to a single sheet of piezoceramic in the longitudinal direction (parallel to polarization), a voltage is generated which tries to return the piece to its original thickness.

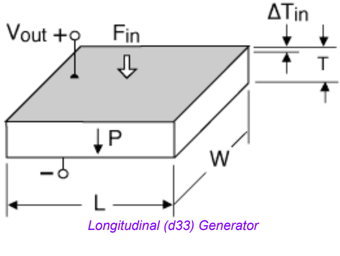

Longitudinal (d33) Generator

Similarly, when a stress is applied to a sheet in a transverse direction (perpendicular to polarization), a voltage is generated which tries to return the piece to its original length and width. A sheet bonded to a structural member which is stretched or flexed will induce electrical generation.

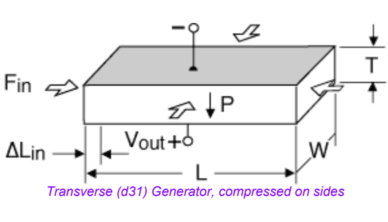

Transverse (d31) Generator, compressed on sides

2-Layer Generators

Applying a mechanical stress to a laminated two layer element results in electrical generation depending on the direction of the force, the direction of polarization, and the wiring of the individual layers.

Extension Generators:
When a mechanical stress causes both layers of a suitably polarized 2-layer element to stretch (or compress), a voltage is generated which tries to return the piece to its original dimensions. Essentially, the element acts like a single sheet of piezo. The metal shim sandwiched between the two piezo layers provides mechanical strength and stiffness while shunting a small portion of the force.

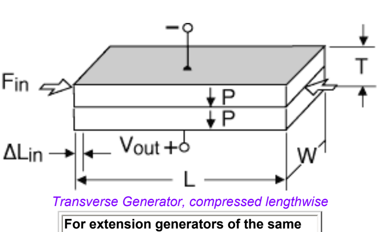

Transverse Generator, compressed lengthwise

For extension generators of the same thickness and force loading:
XL, Deflection Limit ∝ L
Voc, Open Circuit Voltage ∝ XL / L = l
Icc, Closed Circuit Current ∝ L x W

Bending Generators:
When a mechanical force causes a suitable polarized 2-layer element to bend, one layer is compressed and the other is stretched. Charge develops across each layer in an effort to counteract the imposed strains. This charge may be collected as observed here.

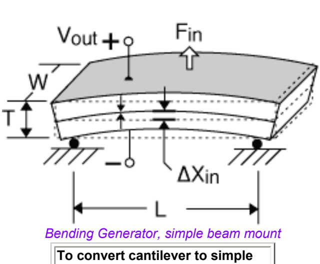

Bending Generator, simple beam mount

To convert cantilever to simple beam generator performance (for the same thickness and force load):
Voc = 1/4X cantilever voltage
Icc = 1/4X cantilever current
To convert cantilever to simple beam performance (for the same thickness and deflection):
Voc = 4X cantilever voltage
Icc = 4X cantilever current

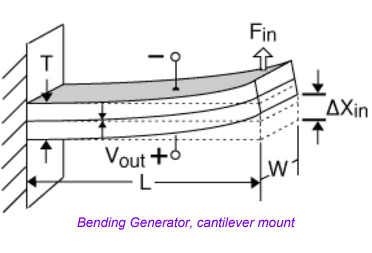

Bending Generator, cantilever mount

For Bending Generators of the same thickness and force loading:
XL, Deflection Limit ∝ L^2
Voc, Open Circuit Voltage ∝ XL / L^2 = l
Icc, Closed Circuit Current ∝ L x W

Multi-Layer Generators

Stack Generators:
The stack, which comprises a large number of piezo layers, is a very stiff structure with a high capacitance. It is suitable for handling high force and collecting a large volume of charge.

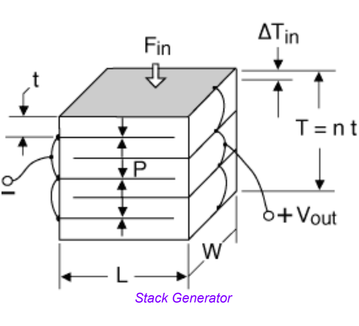

Generator Performance

[illegible]

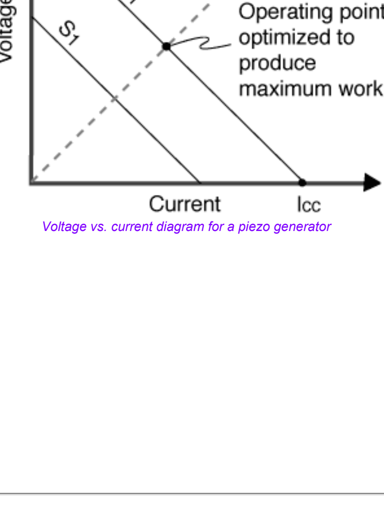

Static & Dynamic Operation

[illegible]

Series & Parallel Operation

[illegible]

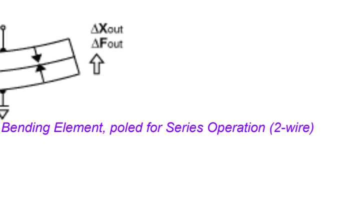

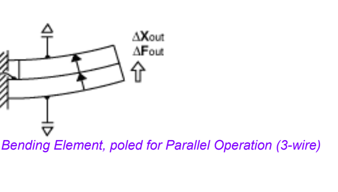

X & Y Poling Configurations

[illegible]

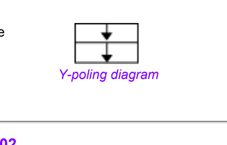

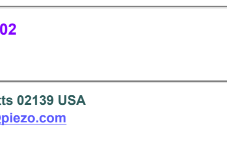

186 Massachusetts Avenue · Cambridge, Massachusetts 02139 USA

PIEZO SYSTEMS, INC.

Application Data

INTRODUCTION

When a piezoceramic element is stressed electrically by a voltage, its dimensions change. When it is stressed mechanically by a force, it generates an electric charge. If the electrodes are not short-circuited, a voltage associated with the charge appears.

A piezoceramic is therefore capable of acting as either a sensing or transmitting element, or both. Since piezoceramic elements are capable of generating very high voltages, they are compatible with today's generation of solid-state devices - rugged, compact, reliable, and efficient.

The following text describes the terminology of piezoceramics and the relationship among variables for functional applications.

RELATIONSHIPS

Relationships between applied forces and the resultant responses depend upon: the piezoelectric properties of the ceramic; the size and shape of the piece; and the direction of the electrical and mechanical excitation.

To identify directions in a piezoceramic element, three axes are used. These axes, termed 1, 2, and 3, are analogous to X, Y, and Z of the classical three dimensional orthogonal set of axes.

The polar, or 3 axis, is taken parallel to the direction of polarization within the ceramic. This direction is established during manufacturing by a high DC voltage that is applied between a pair of electroded faces to activate the material. In shear operations, these poling electrodes are later removed and replaced by electrodes deposited on a second pair of faces. In this event, the 3 axis is not altered, but is then parallel to the electroded faces found on the finished element. When the mechanical stress or strain is shear, the subscript 5 is used in the second place.

Piezoelectric coefficients with double subscripts link electrical and mechanical quantities. The first subscript gives the direction of the electrical field associated with the voltage applied, or the charge produced. The second subscript gives the direction of the mechanical stress or strain. Several piezoceramic material constants may be written with a "superscript" which specifies either a mechanical or electrical boundary condition. The superscripts are T, E, D, and S, signifying:

T = constant stress = mechanically free
E = constant field = short circuit
D = constant electrical displacement = open circuit
S = constant strain = mechanically clamped

As an example, K^T_3 expresses the relative dielectric constant (K), measured in the polar direction ($_3$) with no mechanical clamping applied.

"d" CONSTANT

The piezoelectric constants relating the mechanical strain produced by an applied electric field are termed the strain constants, or the "d" coefficients. The units may then be expressed as meters per meter, per volts per meter (meters per volt).

$$d = \frac{\text{strain development}}{\text{applied electric field}}$$

It is useful to remember that large d_{ij} constants relate to large mechanical displacements which are usually sought in motional transducer devices. Conversely, the coefficient may be viewed as relating the charge collected on the electrodes, to the applied mechanical stress. d_{33} applies when the force is in the 3 direction (along the polarization axis) and is impressed on the same surface on which the charge is collected. d_{31} applies when the charge is collected on the same surface as before, but the force is applied at right angles to the polarization axis.

The subscripts in d_{15} indicate that the charge is collected on electrodes which are at right angles to the original poling electrodes and that the applied mechanical stress is shear.

The units for the d_{ij} coefficients are commonly expressed as coulombs/square meter per newton/square meter.

$$d = \frac{\text{short circuit charge density}}{\text{applied mechanical stress}}$$

When the force that is applied is distributed over an area which is fully covered by electrodes (even if that is only a portion of the total electrode) the units of the area cancel from the equation and the coefficient may be expressed in terms of change per unit force, coulombs per newton. To view the d_{ij} coefficients in this manner is useful when charge generators are contemplated, e.g., accelerometers.

"g" CONSTANT

The piezoelectric constants relating the electric field produced by a mechanical stress are termed the voltage constants, or the "g" coefficients. The units may then be expressed as volts/meter per newtons/square meter.

$$g = \frac{\text{open circuit electric field}}{\text{applied mechanical stress}}$$

Output voltage is obtained by multiplying the calculated electric field by the thickness of ceramic between electrodes. A "33" subscript indicates that the electric field and the mechanical stress are both along the polarization axis. A "31" subscript signifies that the pressure is applied at right angles to the polarization axis, but the voltage appears on the same electrodes as in the "33" case.

A "15" subscript implies that the applied stress is shear and that the resulting electric field is perpendicular to the polarization axis. High g_{ij} constants favor large voltage output, and are sought after for sensors. Although the g coefficient are called voltage coefficients, it is also correct to say the g_{ij} is the ratio of strain developed over the applied charge density with units of meters per meter over coulombs per square meter.

$$g = \frac{\text{strain developed}}{\text{applied charge density}}$$

DIELECTRIC CONSTANTS

The relative dielectric constant is the ratio of the permittivity of the material, ε, to the permittivity of free space, ε_0, in the unconstrained condition, i.e., well below the mechanical resonance of the part.

$$K = \frac{\text{permittivity of material}}{\text{permittivity of free space}} = \frac{\varepsilon}{\varepsilon_0}$$

CAPACITANCE

Whereas the relative dielectric constant is strictly a material property, the capacitance is a quantity dependent on the type of material and its dimensions. Capacitance is calculated by multiplying the relative dielectric constant by the permittivity of free space ($\varepsilon_0 = 8.9 \times 10^{-12}$ farads/meter) and electrode surface area, then dividing by the thickness separating the electrodes. Units are expressed in farads.

$$C = \frac{K \varepsilon_0 A}{t}$$

K_3 is related to the capacitance between the original poling electrodes. K_1 is related to the capacitance between the second pair of electrodes applied after removal of the poling electrodes for the purposes of shear excitation.

At frequencies far below resonance, piezoelectric ceramic transducers are fundamentally capacitors. Consequently, the voltage coefficients g_{ij} are related to the charge coefficients d_{ij} by the dielectric constant K_i as, in a capacitor, the voltage V is related to the charge Q by the capacitance C.

The equations are:

$$Q = CV$$
$$d_{33} = K^T_3 \varepsilon_0 g_3$$
$$d_{31} = K^T_3 \varepsilon_0 g_{31}$$
$$d_{15} = K^T_1 \varepsilon_0 g_{15}$$

At resonance, the dielectric constant will be reduced by the factor ($l-k^2$) where k is the coupling coefficient of the mode in question.

COUPLING COEFFICIENTS

Electromechanical coupling k_{33}, k_{31}, k_p, and k_{15} describe the conversion of energy by the ceramic element from electrical to mechanical form or vice versa. The ratio of the stored converted energy of one kind (mechanical or electrical) to the input energy of the second kind (electrical or mechanical) is defined as the square of the coupling coefficient.

$$k = \sqrt{\frac{\text{mechanical energy stored}}{\text{electrical energy applied}}}$$

or

$$k = \sqrt{\frac{\text{electrical energy stored}}{\text{mechanical energy applied}}}$$

Subscripts denote the relative directions of electrical and mechanical quantities and the kind of motion involved. They can be associated with vibratory modes of certain simple transducer shapes; k_{33} is appropriate for a long thin bar, electroded on the ends, and polarized along the length, and vibrating in a simple length expansion and contraction. k_{31} relates to a long thin bar, electroded on a pair of long faces, polarized in thickness, and vibrating in simple length expansion and contraction. k_p signifies the coupling of electrical and mechanical energy in a thin round disc, polarized in thickness and vibrating in radial expansion and contraction. k_{15} describes the energy conversion in a thickness shear vibration. Since these coefficients are energy ratios, they are dimensionless.

YOUNG'S MODULUS

As with all solids, piezoelectric ceramics have mechanical stiffness properties described as Young's Modulus. Young's Modulus is the ratio of stress (force per unit area) to strain (change in length per unit length).

$$Y = \frac{\text{stress}}{\text{strain}}$$

Because mechanical stressing of the ceramic produces an electrical response which opposes the resultant strain, the effective Young's Modulus with electrodes short circuited is lower than with the electrodes open circuited. In addition, the stiffness is different in the 3 direction from that in the 1 or 2 direction. Therefore, in expressing such quantities both direction and electrical conditions must be specified. Y^E_{33} is the ratio of stress to strain in the 3 direction at constant field E (electrodes shorted). Y^D_{33} is the equivalent with the electrodes open circuited. Y^E_{11} and Y^D_{11} are the moduli in the 1 or 2 direction. Y^E_{55} and Y^D_{55} are the ratios of shear stress to shear strain. Units are usually newtons/square meter.

It should be clearly understood that the piezoceramic properties described above are defined for ideal shapes measured under ideal mechanical and electrical boundary conditions. When put to use under practical device operating conditions, the predicted performance is approached but seldom realized. Non-ideal shapes and non-ideal boundary conditions contribute to transduction losses due to such things as standing waves, interfering vibrational modes, pseudo-clamping, stray electric and dielectric resistances. Since the possibilities are infinite, the designer must evaluate each component under the use conditions for which it is intended.

DENSITY

The ratio of the mass to volume in the material, expresses in kg/m^3

$$\rho = \frac{\text{mass}}{\text{volume}}$$

DISSIPATION FACTOR

A measure of the dielectric losses in the material-defined as the tangent of the loss angle or the ratio of parallel resistance to the parallel reactance, expressed in percent.

MECHANICAL (Qm)

The ratio of reactance to resistance in the equivalent series circuit representing the mechanical vibrating resonant systems. The shape of the part affects the value.

CURIE TEMPERATURE

The temperature at which the crystal structure changes from a non-symmetrical (piezoelectric) to a symmetrical (non-piezoelectric) form, expresses in degrees Celsius.

AGING RATE

Aging is the attempt of the ceramic to change back to its original state prior to polarization. Aging of piezoelectric ceramics is a logarithmic function with time. The aging rate defines change in the material parameters per decade of time, i.e., 1-10 days, 5-50 days, etc.

PYROELECTRICITY

Piezoelectric materials are also pyroelectric. They produce electric charge as they undergo a temperature change. When their temperature is increased, a voltage develops having the same orientation as the polarization voltage. When their temperature is decreased, a voltage develops having an orientation opposite to the polarization voltage, creating a depolarizing field with the potential to degrade the state of polarization of the part.

The maximum electric field which arises due to a temperature shift is:

$$E(\text{pyro}) = \frac{\alpha (\Delta T)}{K_3 \varepsilon_0}$$

where E (pyro) is the induced electric field in volts/meter, α is the pyroelectric coefficient in Coulomb/° C meter ^{2}, ΔT is the temperature difference in °C, K_3 is the dielectric constant, and ε_0 is the dielectric permittivity of free space. For PZT piezoceramic, α is typically ~ 400×10^{-6} coulomb/°C meter^2.

PERFORMANCE

Deflection and Force: Piezoelectric actuators are usually specified in terms of their free deflection and blocked force. Free deflection, X(f), refers to displacement at a given voltage level without the actuator working against any external load. Blocked force, F(b), refers to the force exerted at a given voltage level when the actuator is not allowed to move. Since the force at maximum deflection is zero, all other values of simultaneous displacement and force (for a given voltage level) are determined by a line drawn between these points on a force versus deflection. In practice, a bending motor must move a specified amount and exert a specified force, which determines its operating point on the force versus deflection diagram. Work is maximized when the deflection performed permits one half the blocked force to be developed. This occurs when the deflection equals one half the free deflection.

For cantilevered bending motors, X(f) and F(b) are approximated by observing the tip deflection after energizing, and by holding a force gauge against the tip during energization.

LINEAR MATHEMATICAL RELATIONS

The expressions listed in the diagrams represent the linear relations measured at low voltages.

- Motor Transducer Relationships
- Generator Transducer Relationships

TYPICAL THERMAL PROPERTIES

- Temperature Dependence of Piezoelectric Properties

186 Massachusetts Avenue · Cambridge, Massachusetts 02139 USA
Tel: 617.547.1777 · Fax: 617.354.2200 email: piezo@piezo.com

PIEZO SYSTEMS, INC.

Recommended Reading

If you haven't found enough information about piezoelectricity online, we suggest the following publications to further your knowledge.

Since many of these publications are out of print or hard to find, we have included links where we have found specific books in the past.

Advanced Fibers and Composites *Francis S. Galasso*	BARNES&NOBLE.com
Applications of Acoustical Phenomena *Warren Perry Mason*	The Journal of Acoustical Society of America, Vol. 68, No. 1
Ceramic Materials for Electronics *Relva C. Buchanan*	amazon.com
Developments in Fabrication of Piezoelectric Devices *Kiyoshi Okazaki*	Ferroelectrics Journal, Vol. 41
Electromagnetoelasticity: Piezoelectrics and Electrically Conductive Solids *V.Z. Parton, B.A. Kudryavstev*	BARNES&NOBLE.com
Ferroelectric Transducers and Sensors *J.M. Herbert*	BARNES&NOBLE.com
Fifty Years of Ferroelectricity *Warren Perry Mason*	The Journal of Acoustical Society of America, Vol. 50, No. 5
Fundamentals of Piezoelectricity *Takuro Ikeda*	Oxford University Press
An Introduction to the Mechanics of Solids: Second Edition with SI Units *Crandall, Dahl and Lardner*	BARNES&NOBLE.com
Introduction to Ultrasonic Motors *T. Sashida, T. Kenjo*	BARNES&NOBLE.com
Lattice Dynamical Foundations of Continuum Theories: Elasticity, Piezoelectricity (Series in Theoretical and Applied Mechanics, Vol. 2) *Attila Askar*	amazon.com
Linear Piezoelectric Plate Vibrations - Elements of the Linear Theory of Piezoelectricity and the Vibrations of Piezoelectric Plates *H.F. Tiersten*	Plenum Press
Physical Acoustics, Vol. 1 *Warren Perry Mason*	Academic Press
Physical Properties of Crystals *J.F. Nye*	BARNES&NOBLE.com
Physics of Crystalline Dielectrics Vol 2, Electrical Properties *I.S. Zheludev*	Plenum Press
Piezoelectric Accelerometer and Vibration Preamplifier Handbook *Mark Serridge and Torben R. Licht*	Bruel & Kjaer
Piezoelectric Actuators and Ultrasonic Motors *Kenji Uchino*	BARNES&NOBLE.com
Piezoelectric Ceramics *Jaffe, Cook & Jaffe*	BARNES&NOBLE.com
Piezoelectric Ceramics *J. van Randeraat and R.E. Setterington*	Eindhoven, The Netherlands, 1968
Piezoelectric Crystals and Their Application to Ultrasonics *Warren Perry Mason*	Van Nostrand-Reinhold
Piezoelectric Devices in Japan *Tetsuro Tanaka*	Ferroelectrics Journal, Vol. 40
Piezoelectric Physics *Weilie Zhong*	Science & Technology Publishing House
Piezoelectricity *J.J. Gagnepain and T.R. Meeker*	1982
Piezoelectricity (Ferroelectricity and Related Phenomena, Vol. 4) *George Taylor*	amazon.com
Piezoelectricity (Key Papers in Physics) *Carol Zwick Rosen, et al*	powell's books
Piezoelectricity: An Introduction to the Theory and Applications of Electromechanical Phenomena in Crystals *Walter Guyton Cady*	Dover Press (1964)
Piezoelectricity, Its History and Applications *Warren Perry Mason*	Journal of Acoustical Society of America, Vol. 70, No. 6
Proceedings of the First International Symposium on Piezoelectricity in Biomaterials and Biomedical Devices (Numbers 1,2,3, &4) *Pierre Galletti*	amazon.com
Solid State Magnetic and Dielectric Devices *H.W. Katz*	John Wiley
Some Design Considerations in the Use of Bimorphs as Motor Transducers *C. Germano*	TP 237, Vernitron Piezoelectric Division
Structure, Properties and Preparation of Perovskite Type Compounds *F.S. Galasso*	Permagon Press
The Theory of Piezoelectric Shells and Plates *Nellya N. Rogacheva*	BARNES&NOBLE.com
Transformation of Energy in Piezoelectric Drive Systems *I. Lucas*	Siemens (1975)
Ultrasonic Motors, Theory and Applications *S. Ueha (1993)*	Oxford University Press
Ultrasonic Transducer Materials *D. Berlincourt (1971)*	Plenum Press
Vibrations of Elastic Plates: Linear and Nonlinear Dynamical Modeling of Sandwiches, Laminated composites, and Piezoelectric layers *Yi-yuan Yu*	powell's books

186 Massachusetts Avenue · Cambridge, Massachusetts 02139 USA
Tel: 617.547.1777 · Fax: 617.354.2200 email: piezo@piezo.com

PIEZO SYSTEMS, INC.

Glossary of Piezo Terms; List of Symbols

Bimorph
A common alternate term for "bender" or 2-layer element. Two layers of piezoceramic with or without a center shim.

Capacitance (free)
Referring to capacitance measurement on piezoelectric sample, the capacitance value obtained with sample being totally free of mechanical constraint during measurement process.

Capacitance (clamped)
Referring to capacitance measurement on a piezoelectric sample, the capacitance value obtained with sample being totally constrained from motion (i.e., "clamped") during measurement.

Coercive Field
Relating to a uniform ferroelectric material, the electric field required to oppose and bring to zero the internal polarization.

Charge Constant (d)
see "d" Constant

Compliance (s)
see "s" Constant

Coupling Coefficient (k)
A dimensionless number related to the effectiveness of electrical to mechanical energy conversion in nonresonant piezoelectric devices.

Curie Temperature:
Temperature at which the crystal structure undergoes a phase change from non-symmetrical lattice (such as tetragonal) to symmetrical lattice (such as cubic). Drastic dielectric and piezoelectric coefficient changes accompany this phase change.

"d" Constant
The piezoelectric constant relating applied electric field to resultant strain (units of meters per volt).

Density
In reference to piezoceramics, the mass per unit volume of a fired ceramic body. High density is an important measure of the quality and uniformity of ceramic material because it indicates the absence of microscopic pores which weaken the ceramic and cause poling difficulties.

Dielectric Constant
see "K" Constant (capital "K"!)

Electrostrictive Materials
An important class of solid state motor materials which exhibit strains proportional to the square of the applied electric field strength. (By contrast piezoelectric materials exhibit strains directly proportional to the applied field strength.

Ferroelectric Materials
Class of crystalline materials which possess an internal polarization which can be reversed by an externally applied field, i.e., a crystalline material which can be poled. All of the commonly used piezoceramics are ferroelectric.

Flaw Detection
An early practical application of piezoelectrics, taking advantage of the fact that ultrasonic sound waves travel freely in a solid object (such as a steel girder) until they hit an air bubble or a structural flaw, at which point they reflect backwards and are detectable.

Frequency Constant
see "N" Frequency Constant.

"g" Constant
Piezoelectric coefficient relating the stress applied to a crystal to the resultant electric field in the crystal (units of volt meters per Newton).

"K" Constant (Dielectric Constant)
For a piezoceramic material, the ratio of its dielectric permittivity to the dielectric permittivity of free space (8.85 E -12 Farads per Meter).

Mechanical Q
Referring to both piezoelectric materials and non-piezoelectric materials - the INVERSE of the percentage of mechanical input energy which is converted to heat (the balance being stored as recoverable elastic energy). A material with Q = 100, when subjected to 1.00 Joules of work, will lose .01 Joules to internal heating.

"N" Frequency Constant
Referring to resonating piezoelectric bodies of various geometries - the product of the resonant frequency and the length of the body along the axis of motion for the designated vibrational mode.

Piezo Electricity
An observed phenomenon in some crystals - the generation of surface charges in response to applied stresses.

Pyroelectricity
An observed phenomenon in some crystals - the generation of surface charges in response to the application of uniform temperature changes.

"s" Constant (compliance)
In an elastic body, the ratio of uniaxial strain to uniaxial stress. Saw Device: Piezoelectric acoustic device employing surface acoustic waves.

Sonar
Name given to piezoelectric application consisting of measuring distances to submerged objects by broadcasting a sound "pulse" and timing the reflected signal.

Strain
The ratio of change-in-length to length. Used in describing the effects of applied stresses or applied electric fields.

Stress
In a mechanical sample, the ratio of applied force to cross-sectional area which bears that force.

Ultrasonic
Refers to the frequency of operation of an electric or acoustic device - a general term for "higher than 20 kiloherz".

Voltage Constant (g)
see "g" constant.

Young's Modulus
Elastic modulus of a solid sample, i.e., the ratio of stress in a sample to applied strain. For practical purposes, Young's modulus is equal to the inverse of the appropriate "s" constant.

List of Symbols

Symbol	Name	Unit
A	Area	m^2
C	Capacitance	F
D	Diameter	m
Di *	Dielectric displacement	C / m^2
d_{ij} *	Piezoelectric charge constants	C / N
E_i *	Electric field components	V / m
E_c	Coercive field	V / m
F_r	Resonant frequency	Hz
F	Force	N
F_b	Blocking force	N
g_{ij} *	Piezoelectric voltage constants	V m / N
G	Shear modulus	N / m^2
k	Electromechanical coupling coefficient	
k_{33}	Longitudinal coupling coefficient	
k_{31}	Transverse coupling coefficient	
k_{15}	Shear coupling coefficient	
k_p	Planar coupling coefficient	
k_t	Thickness coupling coefficient	
k_{eff}	Effective coupling coefficient	
K_{ij}^S *	Relative dielectric constant at constant strain	
K_{ij}^T *	Relative dielectric constant at constant stress	
L	Length	m
p	Pressure	N / m^2
ρ	Pyroelectric coefficient	$C / m^2 K$
Pi	Polarization components	C / m^2
P	Power	W
Q	Mechanical quality factor	
Q	Electric charge	C
Q_s	Short circuit charge	C
R	Electrical resistance	Ω
s_{ij}^E *	Elastic compliance at constant E	m^2 / N
S_i	Strain components	
S_{max}	Maximum recommended strain	
t	Time	s
t	Thickness	m
tr	Response time	s
T	Thickness	m
T_i *	Stress components	N / m^2
V	Volume	m^3
V	Electrical voltage	V
V_o	Open circuit voltage	V
v_s	Velocity of sound	m / s
x	Deflection	m
x_o	Free deflection	m
α	Thermal expansion coefficient	1 / K
ε_o	Dielectric constant of free space	F / m
ρ	Density	kg / m^3
ρ	Electrical bulk resistivity	Ω m

* i = 1 to 3
* j = 1 to 6

186 Massachusetts Avenue · Cambridge, Massachusetts 02139 USA
Tel: 617.547.1777 · Fax: 617.354.2200 email: piezo@piezo.com

PIEZO SYSTEMS, INC.

History of Piezoelectricity

DISCOVERY AND INSIGHTS

1880 - 1882

The first experimental demonstration of a connection between macroscopic piezoelectric phenomena and crystallographic structure was published in 1880 by Pierre and Jacques Curie. Their experiment consisted of a conclusive measurement of surface charges appearing on specially prepared crystals (tourmaline, quartz, topaz, cane sugar and Rochelle salt among them) which were subjected to mechanical stress. These results were a credit to the Curies' imagination and perseverance, considering that they were obtained with nothing more than tinfoil, glue, wire, magnets and a jeweler's saw.

In the scientific circles of the day, this effect was considered quite a "discovery," and was quickly dubbed as "piezoelectricity" in order to distinguish it from other areas of scientific phenomenological experience such as "contact electricity" (friction generated static electricity) and "pyroelectricity" (electricity generated from crystals by heating).

The Curie brothers asserted, however, that there was a one-to-one correspondence between the electrical effects of temperature change and mechanical stress in a given crystal, and that they had used this correspondence not only to pick the crystals for the experiment, but also to determine the cuts of those crystals. To them, their demonstration was a confirmation of predictions which followed naturally from their understanding of the microscopic crystallographic origins of pyroelectricity (i.e., from certain crystal asymmetries).

The Curie brothers did not, however, predict that crystals exhibiting the direct piezoelectric effect (electricity from applied stress) would also exhibit the converse piezoelectric effect (stress in response to applied electric field). This property was mathematically deduced from fundamental thermodynamic principles by Lippmann in 1881. The Curies immediately confirmed the existence of the "converse effect," and continued on to obtain quantitative proof of the complete reversibility of electro-elasto-mechanical deformations in piezoelectric crystals.

A LABORATORY CURIOSITY - A MATHEMATICAL CHALLENGE

1882 - 1917

At this point in time, after only two years of interactive work within the European scientific community, the core of piezoelectric applications science was established: the identification of piezoelectric crystals on the basis of asymmetric crystal structure, the reversible exchange of electrical and mechanical energy, and the usefulness of thermodynamics in quantifying complex relationships among mechanical, thermal and electrical variables.

In the following 25 years (leading up to 1910), much more work was done to make this core grow into a versatile and complete framework which defined completely the 20 natural crystal classes in which piezoelectric effects occur, and defined all 18 possible macroscopic piezoelectric coefficients accompanying a rigorous thermodynamic treatment of crystal solids using appropriate tensorial analysis. In 1910 Voigt's "Lerbuch der Kristallphysik" was published, and it became the standard reference work embodying the understanding which had been reached.

During the 25 years that it took to reach Voigt's benchmark, however, the world was not holding its breath for piezoelectricity. A science of such subtlety as to require tensorial analysis just to define relevant measurable quantities paled by comparison to electro-magnetism, which at the time was maturing from a science to a technology, producing highly visible and amazing machines. Piezoelectricity was obscure even among crystallographers; the mathematics required to understand it was complicated; and no publicly visible applications had been found for any of the piezoelectric crystals.

The first serious applications work on piezoelectric devices took place during World War I. In 1917, P. Langevin and French co-workers began to perfect an ultrasonic submarine detector. Their transducer was a mosaic of thin quartz crystals glued between two steel plates (the composite having a resonant frequency of about 50 KHz), mounted in a housing suitable for submersion. Working on past the end of the war, they did achieve their goal of emitting a high frequency "chirp" underwater and measuring depth by timing the return echo. The strategic importance of their achievement was not overlooked by any industrial nation, however, and since that time the development of sonar transducers, circuits, systems, and materials has never ceased.

FIRST GENERATION APPLICATIONS WITH NATURAL CRYSTALS

1920 - 1940

The success of sonar stimulated intense development activity on all kinds of piezoelectric devices, both resonating and non-resonating. Some examples of this activity include:

- Megacycle quartz resonators were developed as frequency stabilizers for vacuum-tube oscillators, resulting in a ten-fold increase in stability.
- A new class of materials testing methods was developed based on the propagation of ultrasonic waves. For the first time, elastic and viscous properties of liquids and gases could be determined with comparative ease, and previously invisible flaws in solid metal structural members could be detected. Even acoustic holographic techniques were successfully demonstrated.
- Also, new ranges of transient pressure measurement were opened up permitting the study of explosives and internal combustion engines, along with a host of other previously unmeasurable vibrations, accelerations, and impacts.

In fact, during this revival following World War I, most of the classic piezoelectric applications with which we are now familiar (microphones, accelerometers, ultrasonic transducers, bender element actuators, phonograph pick-ups, signal filters, etc.) were conceived and reduced to practice. It is important to remember, however, that the materials available at the time often limited device performance and certainly limited commercial exploitation.

SECOND GENERATION APPLICATIONS WITH PIEZOELECTRIC CERAMICS

1940 - 1965

During World War II, in the U.S., Japan and the Soviet Union, isolated research groups working on improved capacitor materials discovered that certain ceramic materials (prepared by sintering metallic oxide powders) exhibited dielectric constants up to 100 times higher than common cut crystals. Furthermore, the same class of materials (called ferroelectrics) were made to exhibit similar improvements in piezoelectric properties. The discovery of easily manufactured piezoelectric ceramics with astonishing performance characteristics naturally touched off a revival of intense research and development into piezoelectric devices.

The advances in materials science that were made during this phase fall into three categories:

1. Development of the barium titanate family of piezoceramics and later the lead zirconate titanate family
2. The development of an understanding of the correspondence of the perovskite crystal structure to electro-mechanical activity
3. The development of a rationale for doping both of these families with metallic impurities in order to achieve desired properties such as dielectric constant, stiffness, piezoelectric coupling coefficients, ease of poling, etc.

All of these advances contributed to establishing an entirely new method of piezoelectric device development - namely, **tailoring a material to a specific application**. Historically speaking, it had always been the other way around.
This "lock-step" material and device development proceeded the world over, but was dominated by industrial groups in the U.S. who secured an early lead with strong patents. The number of applications worked on was staggering, including the following highlights and curiosities:

- Powerful sonar - based on new transducer geometries (such as spheres and cylinders) and sizes achieved with ceramic casting.
- Ceramic phono cartridge - cheap, high signal elements simplified circuit design
- Piezo ignition systems - single cylinder engine ignition systems which generated spark voltages by compressing a ceramic "pill"
- Sonobouy - sensitive hydrophone listening/radio transmitting bouys for monitoring ocean vessel movement
- Small, sensitive microphones - became the rule rather than the exception
- Ceramic audio tone transducer - small, low power, low voltage, audio tone transducer consisting of a disc of ceramic laminated to a disc of sheet metal
- Relays - snap action relays were constructed and studied, at least one piezo relay was manufactured

It is worth noting that during this revival, especially in the U.S., device development was conducted along with piezo material development within individual companies. As a matter of policy, these companies did not communicate. The reasons for this were threefold: first, the improved materials were developed under wartime research conditions, so the experienced workers were accustomed to working in a "classified" atmosphere; second, post war entrepreneurs saw the promise of high profits secured by both strong patents and secret processes; and third, the fact that by nature piezoceramic materials are extraordinarily difficult to develop, yet easy to replicate once the process is known.

From a business perspective, the market development for piezoelectric devices lagged behind the technical development by a considerable margin. Even though all the materials in common use today were developed by 1970, at that same point in time only a few high volume commercial applications had evolved (phono cartridges and filter elements, for instance). Considering this fact with hindsight, it is obvious that while new material and device developments thrived in an atmosphere of secrecy, new market development did not - and the growth of this industry was severely hampered.

JAPANESE DEVELOPMENTS

1965 - 1980

In contrast to the "secrecy policy" practiced among U.S. piezoceramic manufacturers at the outset of the industry, several Japanese companies and universities formed a "competitively cooperative" association, established as the Barium Titanate Application Research Committee, in 1951. This association set an organizational precedent for successfully surmounting not only technical challenges and manufacturing hurdles, but also for defining new market areas.

Beginning in 1965 Japanese commercial enterprises began to reap the benefits of steady applications and materials development work which began with a successful fish-finder test in 1951. From an international business perspective they were "carrying the ball," i.e., developing new knowledge, new applications, new processes, and new commercial market areas in a coherent and profitable way.

Persistent efforts in materials research had created new piezoceramic families which were competitive with Vernitron's PZT, but free of patent restrictions. With these materials available, Japanese manufacturers quickly developed several types of piezoceramic signal filters, which addressed needs arising in television, radio, and communications equipment markets; and piezoceramic igniters for natural gas/butane appliances.

As time progressed, the markets for these products continued to grow, and other similarly valuable ones were found. Most notable were audio buzzers (smoke alarms, TTL compatible tone generators), air ultrasonic transducers (television remote controls and intrusion alarms) and SAW filter devices (devices employing Surface Acoustic Wave effects to achieve high frequency signal filtering).

By comparison to the commercial activity in Japan, the rest of the world was slow, even declining. Globally, however, there was still much pioneering research work taking place as well as device invention and patenting.

SEARCH FOR HIGH VOLUME MARKETS

1980 - Present

The commercial success of the Japanese efforts has attracted the attention of industry in many other nations and spurred a new effort to develop successful piezoceramic products. If you have any doubts about this, just track the number of piezo patents granted by the U.S. Patent Office every year - there has been a phenomenal rise. Another measure of activity is the rate and origin of article publication in the piezo materials/applications area - there has been a large increase in publication rate in Russia, China and India.

Solid state motion is presently the single most important frontier. The technical goals of the frontier are to obtain useful and reasonably priced actuators which are low in power and consumption and high in reliability and environmental ruggedness; or, more simply stated, "solenoid replacements," or "electrostatic muscles."

The search for perfect piezo product opportunities is now in progress. Judging from the increase in worldwide activity, and from the successes encountered in the last quarter of the 20th century, important economic and technical developments seem certain.

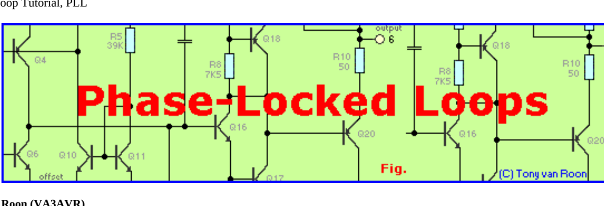

© by Tony van Roon (VA3AVR)

What Exactly Is A PLL?

PLL stands for *'Phase-Locked Loop'* and is basically a closed loop frequency control system, which functioning is based on the phase sensitive detection of phase difference between the input and output signals of the controlled oscillator (CO). You will find no formulas or other complex math within this tutorial. I decided to keep it simple.

But, before we go into any detail, first a little bit of history of the Phase-Locked Loop and prior to that with the superheterodyne.


E.H. Armstrong
1890 - 1954

In the early 1930's, the superheterodyne receiver was king. Edwin Howard Armstrong is widely regarded as one of the foremost contributors to the field of radio-electronics. Among his principal contributions were regenerative feedback circuits, the superheterodyne radio receiver, and a frequency-modulation radio broadcasting system. It superseded the tuned radio frequency receiver TRF also invented by Armstrong in 1918. He was inducted into the National Inventors Hall of Fame in 1980. Armstrong was born on December 18, 1890, in New York City, where he was to spend much of his professional career. He graduated with a degree in electrical engineering from Columbia University in 1913, and observed the phenomenon of regenerative feedback in vacuum-tube circuits while still an undergraduate. At Columbia, he came under the influence of the legendary professor-inventor, Michael I. Pupin, who served as a role model for Armstrong and became an effective promoter of the young inventor. In 1915 Armstrong presented an influential paper on regenerative amplifiers and oscillators to the IRE. Subsequently, regenerative feedback was incorporated into a comprehensive engineering science developed by Harold Black, Harry Nyquist, Hendrik Bode, and others in the period between 1915 and 1940.


Michael I. Pupin
1858 - 1935

Armstrong conceived the superheterodyne radio receiver principle in 1918, while serving in the Army Signal Corps in France. He played a key role in the commercialization of the invention during the early 1920's. The Radio Corporation of America (RCA) used his superheterodyne patent to monopolize the market for this type of receiver until 1930. The superheterodyne eventually extended its domain far beyond commercial broadcast receivers and, for example, proved ideal for microwave radar receivers developed during World War II.

However, because of the number of tuned stages in a superheterodyne, a simpler method was desired. In 1932, a team of British scientists experimented with a method to surpass the superheterodyne. This new type receiver, called the *homodyne* and later renamed to *synchrodyne*, first consisted of a local oscillator, a mixer, and an audio amplifier. When the input signal and the local oscillator were mixed at the same phase and frequency, the output was an exact audio representation of the modulated carrier. Initial tests were encouraging, but the synchronous reception after a period of time became difficult due to the slight drift in frequency of the local oscillator. To counteract this frequency drift, the frequency of the local oscillator was compared with the input by a phase detector so that a correction voltage would be generated and fed back to the local oscillator, thus keeping it on frequency. This technique had worked for electronic servo systems, so why wouldn't it work with oscillators? This type of feedback circuit began the evolution of the Phase-Locked Loop.

As a matter of fact, in 1932 a scientist in France by the name of H.de Bellescise, already wrote a subject on the findings of PLL called *"La Réception Synchrone"*, published in *Onde Electrique, volume 11*. I guess he lacked the funding or did not know how to implement his findings. In either case it is my personal belief that the British scientist team developed further on the findings of Bellescise. No problem, good stuff. That's why papers like Bellescise are there for.

Although the synchronous, or homodyne, receiver was superior to the superheterodyne method, the cost of a phase-locked loop circuit outweighed its advantages. Because of this prohibitive cost the widespread use of this principle did not begin until the development of the monolithic integrated circuit and incorporation of complete phased-lock loop circuits in low-cost IC packages-- *then* things started to happen.
In the 1940s, the first widespread use of the phase-locked loop was in the synchronization of the horizontal and vertical sweep oscillators in television receivers to the transmitted sync pulses. Such circuits carried the names *"Synchro-Lock"* and *"Synchro-Guide."* Since that time, the electronic phase-locked loop principle has been extended to other applications. For example, radio telemetry data from satellites used narrow-band, phase-locked loop receivers to recover low-level signals in the presence of noise. Other applications now include AM and FM demodulators, FSK decoders, motor speed controls, Touch-Tone® decoders, light-coupled analog isolators, Robotics, and Radio Control transmitters and receivers. Nowadays our technology driven society would be at a loss without this technique; our cell phones and satellite tv's would be useless, well, actually they would not exist.

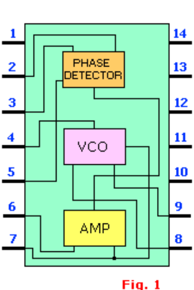

Fig. 1

The PLL is a very interesting and useful building block available as a single integrated circuits from several well known manufacturers. It contains a phase detector, amplifier, and VCO, see Fig. 1 and represents a blend of digital and analog techniques all in one package. One of of its many applications and features is tone-decoding.
There has been traditionally some reluctance to use PLL's, partly because of the complexity of discrete PLL circuits and partly because of a feeling that they cannot be counted on to work reliably. With inexpensive and easy-to-use PLL's now widely available everywhere, that first barrier of acceptance has vanished. And with proper design and conservative application, the PLL is as reliable a circuit element as an op-amp or flip-flop.

Fig. 2 shows the classic configuration. The phase detector is a device that compares two input frequencies, generating an output that is a measure of their phase difference (if, for example, they differ in frequency, it gives a periodic output at the difference frequency). If f_{IN} doesn't equal f_{VCO}, the phase-error signal, after being filtered and amplified, causes the VCO frequency to deviate in the direction of f_{IN}. If conditions are right, the VCO will quickly "lock" to f_{IN} maintaining a fixed relationship with the input signal.

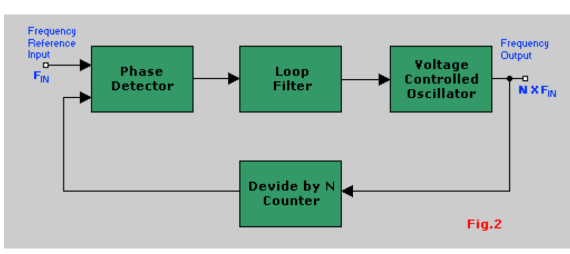

Fig.2

At that point the filtered output of the phase detector is a dc signal, and the control input to the VCO is a measure of the input frequency, with obvious applications to tone decoding (used in digital transmission over telephone lines) and FM detection. The VCO output is a locally generated frequency equal to f_{IN}, thus providing a clean replica of f_{IN}, which may itself be noisy. Since the VCO output can be a triangle wave, sine wave, or whatever, this provides a nice method of generating a sine wave, say, locked to a train of pulses. In one of the most common applications of PLLs, a modulo-*n* counter is hooked between the VCO output and the phase detector, thus generating a multiple of the input reference frequency f_{IN}. This is an ideal method for generating clocking pulses at a multiple of the power-line frequency for integrating A/D converters (dual-slope, charge-balancing), in order to have infinite rejection of interference at the power-line frequency and its harmonics. It also provides the basic technique of frequency synthesizers.
A basic Voltage Controlled Oscillator (VCO) can be seen in Fig. 3. It shows a basic voltage controlled oscillator by which frequency of oscillation is determined by L1, C2, and D2. D2 is a so-called varactor or varicap. Most common diodes will behave as a varicap when reversed biased, but they must be operated below the junction breakdown parameters.
With reverse bias, this diode will act as a capacitor, its depletion zone forming the dielectric properties. Changing the amount of reverse bias within the diode's breakdown limits, will alter the depletion zone width and hence vary the effective capacitance presented by the diode. This in turn changes the frequency resonancy of the oscillator circuit.
But how does this help us? After all, the VCO is not stable. Any slight voltage variation in the circuit will cause a shift in frequency. If there was some way we could combine the flexibility of the VCO with the stability of the crystal oscillator, we would have the ideal frequency synthesis system.

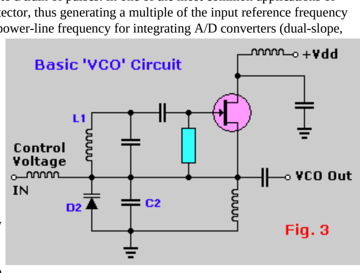

Fig. 3

What if we feed the output of a VCO and Crystal Oscillator into a phase detector? What is a Phase Detector? (See Fig. 4). It is similar to a discriminator or ratio detector used in frequency demodulation or it could be a digital device, like an 'Exclusive OR' gate.
If two signals are fed into a phase detector, being equal in phase and frequency, there will be no output from the detector. However, if these signals are *not* in phase and frequency, the difference is converted to a DC output signal. The greater the frequency/phase difference in the two signals, the larger the output voltage.

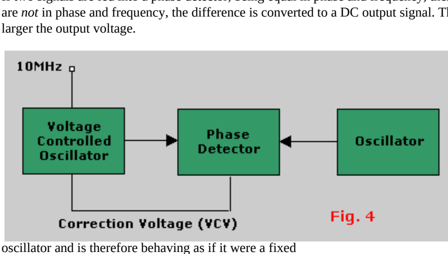

Fig. 4

Look at Fig. 4. The VCO and Crystal Oscillator outputs are combined with a phase detector and any difference will result in a DC voltage output. Suppose this DC voltage is fed back to the Voltage Control Oscillator in such a way that it drives the output of the VCO towards the Crystal Oscillator frequency--eventually the VCO will LOCK onto the crystal oscillator frequency. This phenomena is referred to as Phase Locked Loop in its most basic form. Only part of the VCO output needs to be sent to the phase detector. The rest can be usable output.

But hold on a minute, the VCO is locked onto the crystal oscillator and is therefore behaving as if it were a fixed frequency oscillator. This gives us the stability of a crystal oscillator, but lost the flexibility we were aiming for. We may just as well use the crystal oscillator alone for all the good this arrangement has done to us. It certainly doesn't appear as if we have accomplished anything at all.

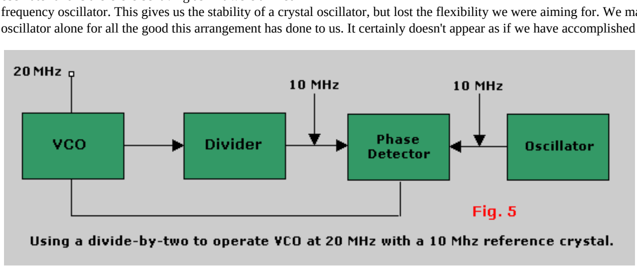

20 MHz. Take a look at Fig. 5. Suppose, for example in Fig. 4 we used a divide-by-four instead of the divide-by-two. Then, at LOCK, the VCO would be oscillating at 40 MHz yet still be as stable as the crystal reference frequency.

There are oscillators that will operate over a large range of frequencies. Variable Frequency Oscillators (VFO) are made to change frequency by changing the value of one of the frequency determining circuits. A VCI is one in which this component is made to change electronically.

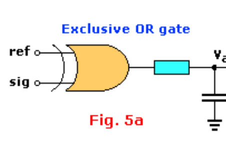

Fig. 5a

PLL Components

Phase Detector: Let's have a look at the basic phase detector. There are actually two basic types, sometimes referred to as Type I, and Type II. The Type I phase detector is designed to be driven by analog signals or digital square-wave signals, whereas the Type II phase detector is driven by digital transitions (edges). They are typified by the most common used 565 (linear Type I) and the CMOS 4046, which contains both Type I and Type II.
The simplest phase detector is the Type I (digital), which is simply an Exclusive-OR gate (see Fig. 5a.). With low-pass filtering, the graph of the output voltage versus phase difference is as shown, for input square-waves of 50% duty-cycle. The Type I (linear) phase detector has similar output-voltage-versus-phase characteristics, although its internal circuitry is actually a "four-quadrant multiplier", also known as a "balanced mixer". Highly linear phase detectors of this type are essential for *lock-in detection*, which is a fine technique.

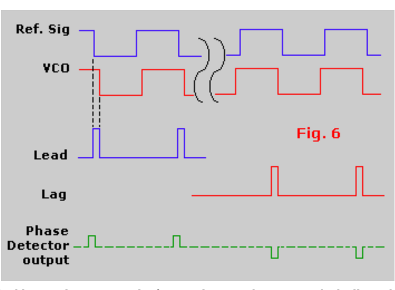

Fig. 6

Todays engineers face constant challenges in the design of PLL circuits because of the level of phase noise and the fundamental property of noise floor signals, especially in the design of radio and wireless networks.
More recently, switching speed of PLL's have become a critical parameter in todays design of synthesizers, and especially for our modern networks such as 3G, WLANs, WCDMA, and Bluetooth technology. The switching speed is emerging as a challenging requirement for single loop, single chip PLL designs. Speed is mainly a function of loop bandwidth, but in many cases the loop band width cannot be too wide because of phase noise considerations. Speed-up techniques have been devised to improve PLL transient time, but most of them have limited efficiency.
In addition, speed-up techniques will have to be improved. For the WCDMA and 3G markets (and others emerging) a reasonable goal is 100 to 150mS for a dF=60Mhz excursion and a convergence to df=250Hz. One solution the industry will probably adopt in the future is the use of highly complex Sigma Delta fractional PLL architectures, which allow a high reference frequency and wide loop bandwidth, while maintaining resolution and a good phase noise profile (low division). This technique is already being implemented today.

Again, I can show you lots of formulas and all sorts of complicated equations but that would defeat the *"easy-to-read"* nature of my tutorials, including this one, so I pass on that and leave the math to others.

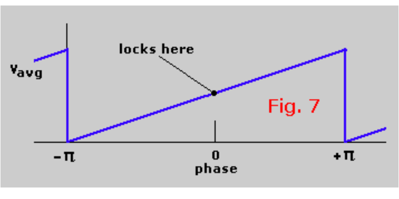

Fig. 7

The type II phase detector is sensitive only to the relative timing of *edges* between the signal and VCO input, as shown in Fig. 6.. The phase comparator circuit generates either *lead* or *lag* output pulses, depending on wether the VCO output transitions occur before or after the transitions of the reference signal, respectively. The width of these pulses is equal to the time between the respective edges. The output circuitry then either sinks or sources current (respectively) during those pulses and is otherwise open-circuited, generating an average output-voltage-versus-phase difference like that in Fig. 7. This is completely independent of the duty cycle of the input signals, unlike the situation with the type I phase comparator discussed earlier. Another nice feature of this phase detector is the fact that the output pulses disappear entirely when the two signals are in lock. This means that there is no "ripple" present at the output to generate periodic phase modulation in the loop, as there is with the type I phase detector. Also, there is an additional difference between the two kinds phase detectors. The type I detector is always generating an output wave, which must then be filtered by the loop filter. Thus, in a PLL with type I phase detector, the loop filter acts as a low-pass filter, smoothing this full-swing logic-output signal. There will always be residual ripple, and consequent periodic phase variations, in such a loop. In circuits where phase-locked loops are used for frequency multiplication or synthesis, this adds "phase-modulation sidebands" to the output signal. By contrast, the type II phase detector generates output pulses only when there is a phase error between the reference and the VCO signal. Since the phase detector output otherwise looks like an open circuit, the loop filter capacitor then acts as a voltage-storage device, holding the voltage that gives the right VCO frequency. If the reference signal moves away in frequency, the phase detector generates a train of short pulses, charging (or discharging) the capacitor to the new voltage needed to put the VCO back into lock.

The second-order PLL, serves as the basis for all PLL synthesizer designs and technology. Most PLL designs, especially for synthesizers where third and fourth order loops are common, use a different terminology, and deal mainly with the open loop gain and phase.

To name a couple of PLL devices from different manufacturers:
NE560 to NE567 (Signetics), MC4046 COS/MOS (Motorola), LM565 (National), NTE989 (NTE Electronics).

Metal Can

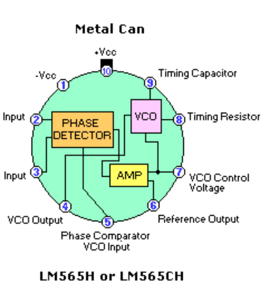

LM565H or LM565CH

Dual-In-Line

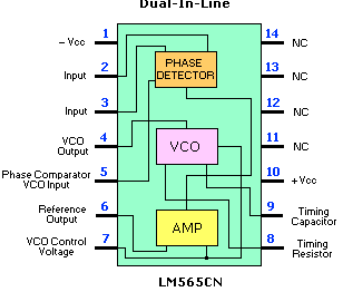

LM565CN

General Features:

The LM565 is a general purpose Phase-Locked Loop IC containing a stable, highly linear voltage controlled oscillator (VCO) for low distortion FM demodulation, and a double balanced phase detector with good carrier suppression. The VCO frequency is set with an external resistor and capacitor, and a tuning range of 10:1 can be obtained with the same capacitor. The characteristics of the closed loop system--bandwidth, response speed, capture and pull in range--may be adjusted over a wide range with an external resistor and capacitor. The loop may be broken between the VCO and the phase detector for insertion of a digital frequency divider to obtain frequency multiplication.
A Phase-Locked Loop has basically three states:

1. Free-running.
2. Capture.
3. Phase-lock.

The range over which the loop system will follow changes in the input frequency is called the *lock range*. On the other hand, the frequency range in which the loop acquires phase-lock is the *capture range, and is never greater than the lock range.*
A low-pass filter is used to control the dynamic characteristics of the phase-locked loop. If the difference between the input and vco frequencies is significantly large, the resultant signal is out of the capture range of the loop. Once the loop is phase-locked, the filter only limits the speed of the loop's ability to track changes in the input frequency. In addition, the loop filter provides a sort of shortterm memory, ensuring a rapid recapture of the signal if the system is thrown out of lock by a noise transient. However, a design of a loop filter represents a compromise in that the parameters of that filter restrict the loop's capture range and speed, it would almost be impossible for the phase-locked loop to lock without it.

General Features and Applications:

- 200ppm/°C frequency stability (drifting) of the VCO
- Power supply range of 5 to 12 volts with 100ppm/% typical
- 0.2% linearity of demodulated output
- Frequency range 0.001 Hz to 500 KHz
- Highly linear triangle wave output
- Linear triangular wave with in phase zero-crossings available
- TTL and DTL compatible phase detector input and square wave output
- Adjustable hold in range from 1% to more than 60%

Some Applications:
- Data and Tape Synchronization
- Modems
- FSK Modulation
- FM Demodulation
- Frequency Synthesizer
- Tone Decoding
- Frequency Multiplication and Division
- SCA Demodulators ('Hidden' Radio)
- Telemetry Receivers
- Signal Regeneration
- Coherent Demodulators
- Satellite
- Robotics & Radio Control

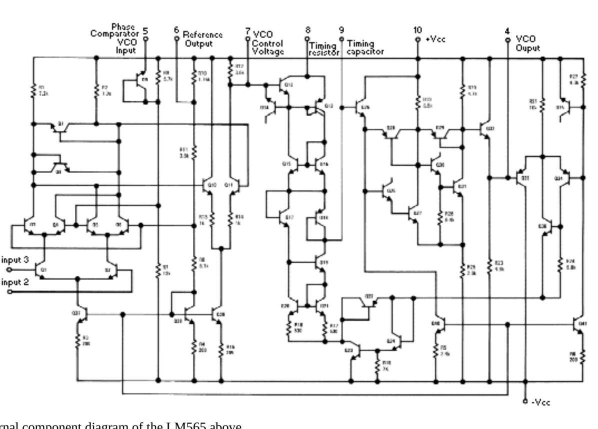

Check out the internal component diagram of the LM565 above.

This tutorial is pretty short in comparison with the 555 and 741 tutorials. Reason is that the complexity and relative complicity of the PLL is still being studied and the real possibilities just more and more realized. Peculiarities are, and will, still be discovered as time goes on. A couple of these to be noticed are the fact that in the case of 'ideal components within the PLL' there exists some systematic phase errors, in that the harmonic content of the output signal is of quite a complicated structure and that the wide band properties of the PLL are also not so simple a thing as it is sometimes taken discussing the matter. We are not done yet with this amazing device by a long shot, for many years to come.

In applications the PLL system is often used in combination with the Automatic Frequency Control (AFC) system and (or) automatic gain (signal level) control system.

Other Useful Applications Information:
In designing with phase locked loops the important parameters of interest are:
- FREE RUNNING FREQUENCY:
- fo = 1/3.7 R0C0

LOOP GAIN:
The Loop Gain relates to the amount of phase change between the input signal and the VCO signal for a shift in input signal frequency (assuming the loop remains in lock). In servo theory, this is called the "velocity error coefficient".

- Loop gain = KoKD (1/sec)
- Ko = oscillator sensitivity (radians per sec/V)
- KD = phase detector sensitivity (V/radian)

The loop gain of the LM565 is dependent on supply voltage, and may be found from:
- KoKD = 33.6 fo/Vc
- fo = VCO frequency in Hz
- Vc = total supply voltage to circuit

Loop gain may be reduced by connecting a resistor between Pin 6 and Pin 7; this reduces the load impedance on the output amplifier and hence the loop gain.

HOLD IN RANGE:
The Hold In Range is the range of frequencies that the loop will remain after initially being locked.
- fH = ± 8 fo/Vc
- fo = VCO frequency in Hz
- Vc = total supply voltage to circuit

THE LOOP FILTER:
In almost all applications, it will be desirable to filter the signal at the output of the phase detector (Pin 7). A simple lag filter may be used for wide closed loop bandwidth applications such as modulation following where the frequency deviation of the carrier is fairly high (greater than 10%), or where wideband modulation signals must be followed.

Resistor Color Code, Tutorial

© Tony van Roon (VA3AVR)

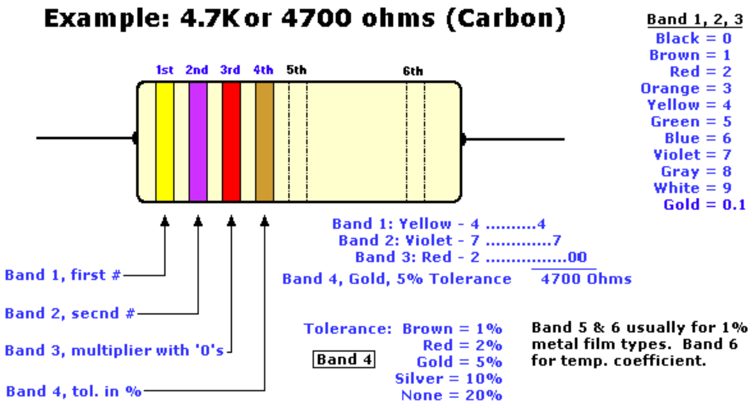

Another example for a Carbon 22000 Ohms or 22 Kilo-Ohms also known as 22K at 5% tolerance:

Band 1 = Red, 1st digit
Band 2 = Red, 2nd digit
Band 3 = Orange, 3rd digit, multiply with zeros, in this case 3 zero's
Band 4 = Gold, Tolerance, 5%

Example for a Precision Metal Film 19200 Ohms or 19.2 KiloOhms also known as 19K2 at 1% tolerance:

Band 1 = Brown, 1st digit
Band 2 = White, 2nd digit
Band 3 = Red, 3rd digit
Band 4 = Red, 4th digit, multiply with zeros, in this case 2 zero's
Band 5 = Brown, Tolerance, 1%
Band 6 = Blue, Temperature Coefficient, 6

If you are a bit serious about the electronics hobby I recommend learning the "Color-Code". It makes life a lot easier. The same color code is used for everything else, like coils, capacitors, rf-chokes, etc. Again, just the color code associated with a number, like: black=0 brown=1 red=2, etc, etc.

If you are interested in learning the code by memory, try the steps below to help you 'Learn the Color-code'.
Make sure you add the number to the color, like: 0 is black, 1 is brown, 2 is red, etc. etc.
Do not proceed to step **3** until you know the color-code backwards, forwards, and inside-and-out (trust me!)

Can you *'create'* your own resistors? Sure thing, and not difficult. Here is how to do it: Draw a line on a piece of paper with a soft pencil, HB or 2HB will do fine. Make the line thick and about 2 inches (5cm) long. With your multimeter, measure the ohm's value of this line by putting a probe on each side of the line, make sure the probes are touching the carbon from the pencil. The value would probably be around the 800K to 1.5M depending on your thickness of the line and what type of pencil lead is used. If you double the line the resistance will drop considerably, if you erase some of it (length-wise obviously!) the resistance will increase. You can also use carbon with silicon glue and when it dries measure the resistance, or gypsum with carbon mixed, etc. The reason for mentioning these homebrew resistors is that this method was used in World War II to fix equipment when no spare parts were available. My father, who was with the Dutch resistance during WWII, at that time made repairs like this on many occasion.

Step 1: Learn the colors.

⬛ 0 = Black
🟫 1 = Brown
🟥 2 = Red
🟧 3 = Orange
🟨 4 = Yellow
🟩 5 = Green
🟦 6 = Blue
🟪 7 = Violet
▨ 8 = Gray
⬜ 9 = White

The color 'Gold' is not featured in the above table. If the 3rd band is gold it means multiplying by 0.1. Example, 1.2 ohm @ 5% would be brown-red-gold-gold. 12 multiplied by 0.1 gives 1.2 Don't get confused by gold as a resistance or a tolerance value. Just watch the location/position of the band.

Step 2: Learn the tolerances.

🟫 1% = Brown
🟥 2% = Red
🟨 5% = Gold
▨ 10% = Silver
20% = No color

Step 3: Do the exercises below. (Cheating gets you nowhere :-))

🟨 Gold
🟧 Orange
▨ Gray
▨ Silver

Colors I used for 'Gold, Orange, Gray, and Silver'

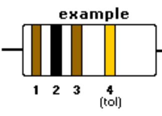

1.

1st band, denominator: Brown (1)
2nd band, denominator: Black (0)
3rd band, how many zeros (1)
4th band, tolerance in %: gold (5)
Answer: 1 0 1 = 100 ohm, 5% tolerance

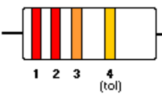

2.

1st band: _____
2nd band: _____
3rd band: _____
4th band, tolerance in %: _____
Answer: ___________________

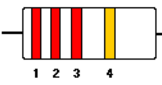

3.

1st band: _____
2nd band: _____
3rd band: _____
4th band, tolerance in %: _____
Answer: ___________________

4.

1st band: _____
2nd band: _____
3rd band: _____
4th band, tolerance in %: _____
Answer: ___________________

5.

1st band: _____
2nd band: _____
3rd band: _____
4th band, tolerance in %: _____
Answer: ___________________

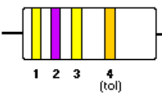

6.

1st band: _____
2nd band: _____
3rd band: _____
4th band, tolerance in %: _____
Answer: ___________________

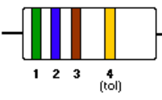

7.

1st band: _____
2nd band: _____
3rd band: _____
4th band, tolerance in %: _____
Answer: ___________________

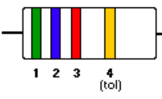

8.

1st band: _____
2nd band: _____
3rd band: _____
4th band, tolerance in %: _____
Answer: ___________________

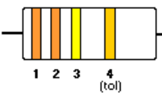

9.

1st band: _____
2nd band: _____
3rd band: _____
4th band, tolerance in %: _____
Answer: ___________________

10.

1st band: _____
2nd band: _____
3rd band: _____
4th band, tolerance in %: _____
Answer: ___________________

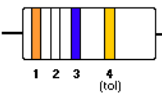

11.

1st band: _____
2nd band: _____
3rd band: _____
4th band, tolerance in %: _____
Answer: ___________________

12.

1st band: _____
2nd band: _____
3rd band: _____
4th band, tolerance in %: _____
Answer: ___________________

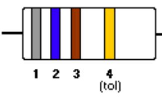

13.

1st band: _____
2nd band: _____
3rd band: _____
4th band, tolerance in %: _____
Answer: ___________________

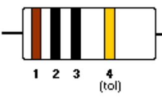

14.

1st band: _____
2nd band: _____
3rd band: _____
4th band, tolerance in %: _____
Answer: ___________________

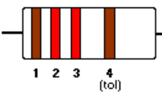

15.

1st band: _____
2nd band: _____
3rd band: _____
4th band, tolerance in %: _____
Answer: ___________________

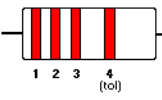

16.

1st band: _____
2nd band: _____
3rd band: _____
4th band, tolerance in %: _____
Answer: ___________________

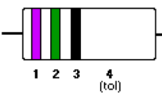

17.

1st band: _____
2nd band: _____
3rd band: _____
4th band, tolerance in %: _____
Answer: ___________________

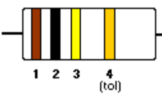

18.

1st band: _____
2nd band: _____
3rd band: _____
4th band, tolerance in %: _____
Answer: ___________________

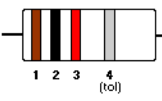

19.

1st band: _____
2nd band: _____
3rd band: _____
4th band, tolerance in %: _____
Answer: ___________________

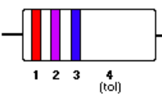

20.

1st band: _____
2nd band: _____
3rd band: _____
4th band, tolerance in %: _____
Answer: ___________________

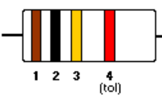

21.

1st band: brown
2nd band: black
3rd band: gold
4th band, tolerance in %: red
Answer: 1-0- 0.1 = 1 ohm. (3rd band is gold, multiply by 0.1)

22.

1st band:
2nd band:
3rd band:
4th band, tolerance in %:
Answer:

23.

1st band:
2nd band:
3rd band:
4th band, tolerance in %:
Answer:

24.

1st band: brown
2nd band: white
3rd band: yellow
4th band: brown
5th band, tolerance in %: brown
Answer: 1 9 4 0 = 1940 ohm. (1.94K or 1K94. Precision resistor.)

25.

1st band:
2nd band:
3rd band:
4th band:
5th band, tolerance in %:
Answer:

To get familiarized with abreviations in values, I used below 4700 or 4K7, 1000 or 1K, which is all the same. Every thousand (1000) is called a 'K' which stands for 'Kilo'. The 'M' stands for 'Mega' (million). 1 Mega is 1000K or 1000 000 ohms. So 4K7 means 4 thousand and 7 hundred or 4700 ohms. 6K8 means 6 thousand and 8 hundred or 6800 ohm. One more example, 1M2 means 1million and 200.000 or 1.200000 ohms. Here are a couple more: 1K92=1.92K=1920 ohms, 100E=100 ohms, 19K3=19.3K=19300 ohms, 1M8=1.8M, etc., etc. These abreviations you find everywhere in the industry, schematics, diagrams and whatever. It is normal and takes a bit of time to get used to.

4700 ohm, 5% = yellow violet red, gold
1000 ohm, 5% = brown black red, gold
150 ohm, 5% = ______________________
3300 ohm, 5% = ______________________
470 ohm, 2% = ______________________
3K3, 5% = ______________________
150 ohm, 1% = ______________________
10M, 10% = ______________________
1 ohm, 1% = ______________________
1200 ohm, 5% = ______________________
220 ohm, 1% = ______________________
47 ohm, 5% = ______________________
3900 ohm, 2% = ______________________
10K, 5% = ______________________

100 ohm, 2% = brown black brown, red
22 ohm, 1% = red red black, brown
270 ohm, 5% = ______________________
10 ohm, 1% = ______________________
6800 ohm, 10% = ______________________
1K, 5% = ______________________
2M9, 10% = ______________________
1 Mega Ohm, 5% = ______________________
3M9, 20% = ______________________
1K2, 5% = ______________________
3300 ohm, 2% = ______________________
390 ohm, 5% = ______________________
100.000 ohm, 5% = ______________________
10.000 ohm, 5% = ______________________

1500 ohm, 2% = ______________________

1M, 10% = ______________________

1.8 ohm, 2% = ______________________

2K76, 1% = ______________________

56K, 5% = ______________________

470K, 1% = ______________________

2.2 ohm, 1% = ______________________

94.1K, 2% = ______________________

This should get you started. If it looks difficult to you, don't worry. It is easy. Whenever you have a spare moment practise the color code in your head. It's like learning to ride a bicycle, once you know how to do it you never forget. I, and many others who learned electronics in the 60's and up to the 80's, were taught a little sentence to remember the sequence of the resistor colors like Black, Brown, Red, Orange, Yellow, Green, Blue, Violet, Gray, and White, which refers to: "**B**ad **B**eer **R**ips **O**ur **Y**oung **G**uts **B**ut **V**odka **G**ives **W**ell". As you will agree this saying no longer applies to the society we live in today for obvious offending reasons. And I'm hessitant to even mention it but fact is, it was part of our 'learning' for decades and so I decided to mention it for reference purposes only.
Good luck my friends!

Just in case, here are the >>> Answers <<< to all the questions above.

Resistor Formulas

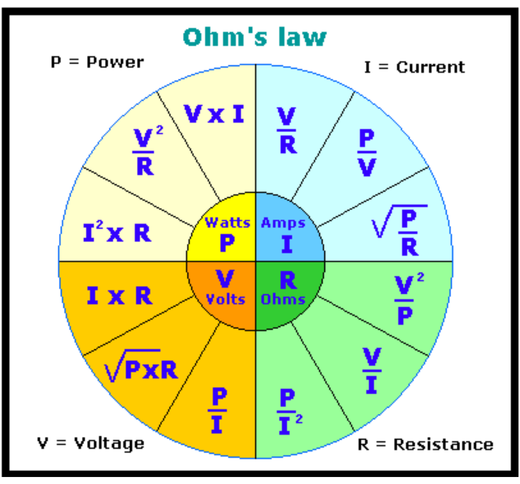

$R = \frac{V}{I}$ **Ohm's Law. R is Resistance, V is Volt, I is Current.**

$R = \rho \frac{1}{A}$ $(\rho = \frac{1}{4} \pi d^2)$ ρ is called 'Rho'

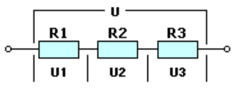

$R_S = R_1 + R_2 + R_3$

Resistors in series; just count them up!

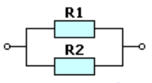

$R_p = \frac{R_1 \cdot R_2}{R_1 + R_2}$

Two resistors in parallel

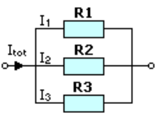

$I_{tot} = I_1 + I_2 + I_3$

$I_{tot} = I_1 + I_2 + I_3 = \frac{1}{R_p} : \frac{1}{R_1} : \frac{1}{R_2} : \frac{1}{R_3}$

$\frac{1}{R_p} = \frac{1}{R_1} + \frac{1}{R_2} + \frac{1}{R_3}$

Multiple resistors in parallel

I forgot to mention a very important thing, there are two resistor *body* colors which you should know what they are if you are thinking of repairing electronic circuits. These body colors are white, and blue (and sometimes composite green depending on where you live) and are used to indicate non-flammable and/or fusible resistor types. It is important to know **NOT** to replace these with ordinairy type resistors. The non-flamable types are there for a reason (they don't burn when overheated) and just replacing it with a normal type resistor may create a fire-hazard or worse. The fusible types are usually white with one black band in the middle of the body. So if you ever are looking for the 'fuses' check these out. They are less than 0.1 ohm, carbon.
In the case of surface mount resistors; since they are so tiny they feature the same coding as on capacitors. For example, if it says 103 this means 10 Kilo-ohm (10 + 3 zeros), 104 means 10 + 4 zeros (100K), 222 means 22 + 2 zeros (2K2). Easy huh?

E24 Standard Series Values (5%)

1.0	10	100	1.0K (1K0)	10K	100K	1.0M(1M0)	10M
1.1	11	110	1.1K (1K1)	11K	110K	1.1M(1M1)	11M
1.2	12	120	1.2K (1K2)	12K	120K	1.2M(1M2)	12M
1.3	13	130	1.3K (1K3)	13K	130K	1.3M(1M3)	13M
1.5	15	150	1.5K (1K5)	15K	150K	1.5M(1M5)	15M
1.6	16	160	1.6K (1K6)	16K	160K	1.6M(1M6)	16M
1.8	18	180	1.8K (1K8)	18K	180K	1.8M(1M8)	18M
2.0	20	200	2.0K (2K0)	20K	200K	2.0M(2M0)	20M
2.2	22	220	2.2K (2K2)	22K	220K	2.2M(2M2)	22M
2.4	24	240	2.4K (2K4)	24K	240K	2.4M(2M4)	
2.7	27	270	2.7K (2K7)	27K	270K	2.7M(2M7)	
3.0	30	300	3.0K (3K0)	30K	300K	3.0M(3M0)	
3.3	33	330	3.3K (3K3)	33K	330K	3.3M(3M3)	
3.6	36	360	3.6K (3K6)	36K	360K	3.6M(3M6)	
3.9	39	390	3.9K (3K9)	39K	390K	3.9M(3M9)	
4.3	43	430	4.3K (4K3)	43K	430K	4.3M(4M0)	
4.7	47	470	4.7K (4K7)	47K	470K	4.7M(4M7)	
5.1	51	510	5.1K (5K1)	51K	510K	5.1M(5M1)	
5.6	56	560	5.6K (5K6)	56K	560K	5.6M(5M6)	
6.2	62	620	6.2K (6K2)	62K	620K	6.2M(6M2)	
6.8	68	680	6.8K (6K8)	68K	680K	6.8M(6M8)	
7.5	75	750	7.5K (7K5)	75K	750K	7.5M(7M5)	
8.2	82	820	8.2K (8K2)	82K	820K	8.2M(8M2)	
9.1	91	910	9.1K (9K1)	91K	910K	9.1M(9M1)	

Back to Main Page   **Back to Circuits Page**   **Back to R/C Gadgets Page**

Last Updated: August 5, 2004

Testing a SCR

Silicon Control Rectifier

"This simple SCR tester can be made with only a couple components. It will provide a visual 'go' or 'no-go' indication--it is simply a voltage source, a lamp, and a resistor through which gate current is supplied."

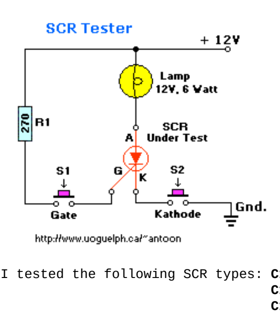

This handy tester will provide a visual "on" or "off" switching and latching indication. When finished, you can test all those posible 'duds' in your junkbox and dump some of those in the garbage. If the scr is latching and can hold the latch it is most likely okay.

Look at the circuit diagram, it shows a 3-amp, 50-volt SCR (under test) and a test circuit. Points "Gate" and "Kathode" are temporary connections, so that they can easily be opened. I used toggle switches for each, but use whatever you feel comfortable with, a simple jumper wire would do the trick. I use this gadget in my shop and so have it mounted in a small case. This circuit can even be bread-boarded for your purpose.

When "Kathode" is closed, the lamp doesn't light. When "Gate" is **also** closed, the lamp lights to its full intensity. The lamp remains lit even if "Gate" is opened again. But when "Kathode" is opened, even momentarily, the lamp does not close again when "Kathode" is closed. That illustrates the "ON" and "OFF" operation of the SCR.

```
I tested the following SCR types: C106D1 (400V/4A)        T106Y1 (30V/4A)
                                  C106F (50V/4A)          C106F1 (50V/4A)
                                  C106B (200V/4A)         CSM2B2 (100V/4A)
                                  T106D1 (400V/4A)        NTE5402 (100V/0.8A)
                                  TIC106M (600V/8A)       NTE5457 (400V/4A)
                                  TIC126M (600V/25A)      CR6AM-8 (400V/10A)
                                  MCR106-3 (100V/4A)      NTE5455 (200V/4A)

In all cases the tester was accurate in telling 'good' from the 'bad'.
```

TRIACS:
I decided to experiment the tester on TRACS since they operate on the same principle. The pin-out of a Triac is usually MT1, MT2, and Gate. Hookup the probes as follows: The 'K' probe to 'MT1', the 'A' probe to 'MT2' and the 'G' probe to 'Gate'. I used a 9Volt and a 12Volt power-supply for bench testing purposes. Execute the tests the same way as a SCR. The lamp should only be on when the K switch is on and G switches on **momentarily**. In any other condition the lamp should remain off. If not, the Triac will almost certainly be defective. Keep the tests on any Triac as short as possible.

```
I tested the following Triacs with good results:

     Q4006L4  (400V/8A)  - Tested Good (was new)
     Q6006LT  (600V/10A) - Tested Defective  (was defective)
     Q6010L5  (600V/10A) - Tested Good (was new)
     L4004F31 (400V/4A)  - Tested Defective  (was defective)
     MAC15A   (400V/15A) - Tested Good (was new)
     NTE5610  (800V/8A)  - Tested Good (was new)
```

Again, in all cases the tester was correct. I compared the results of the two defective Triacs with the results of a very expensive commercial SCR/Triac tester. On the commercial tester you can set the actual VRM (volt) of a Triac and check for leakage and what not but I found the end result the same; "is it good or bad" and is it "switching or not".

I am planning to modify this circuit to include all scr's and triac's, including sensitive gate units. See picture at the left. It is in the prototype stage, so far so good.

Back to Circuits or Gadgets page.

Testing a Triac

by Tony van Roon

These two testing procedures are for use with a digital multimeter in the Ohm's test-range. Testing procedure was actually designed for testing inside micro-waves (magnetrons), but should be no difference in any other circuit. Test in- or out circuit.

A Triac is an electronic switch or relay. Triacs come in many shapes, sizes, and colors. Check the standard terminal designations in the picture below which shows most of the types of triacs that are commonly used in microwave ovens, along with their standard terminal designations.

Located either externally or fixed within an appliance or equipment, the triac operates when it receives an electronics "gate" signal from the control circuitry. It then switches to its closed or "on" state, thus providing for example, a voltage path to the primary winding of the H.V. transformer in a microwave oven and so activating the cooking controls. Or used in a laboratory water-bath which needs to be kept on a specific temperature. The probe-sensor, which is immersed in the water, keeps track of the temperature and sends a gate signal to the triac to either switch on the heating or cooling elements. Most of these probe sensors only contain one or more diodes of the general 1N4148 or 1N914 types.

Important Safety Information

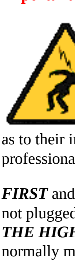

Working on a microwave oven is a VERY dangerous task. Therefore, BEFORE performing any tests, troubleshooting, or repairs, for your personal safety, I strongly urge you to carefully read, fully understand and be prepared to follow the very important safety precautions.

If you are uneasy or unsure about any of these safety procedures or warnings; or if you feel uncertain as to their importance or your ability to manage them, it would be in your best interest to leave the repair to a qualified professional.

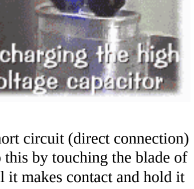

FIRST and ***ALWAYS***, before attempting any repairs, make certain that the unit is not plugged in. Before touching any components or wiring, ***ALWAYS DISCHARGE THE HIGH VOLTAGE CAPACITOR!*** The high voltage capacitor will quite normally maintain a painfully high-voltage charge even after the oven is unplugged. Some capacitors employ a bleeder resistor (either externally or internally) that allows the charge to slowly bleed (or drain) off after the oven is unplugged. Do not trust a bleeder resistor--it may be open.
If you forget to discharge the capacitor, your fingers may ultimately provide the discharge path. You only make this mistake a few times, because, while the electric shock is painful, the real punishment comes when you reflexively yank your hand out leaving behind layers of skin on razor-like edges that are there as a reminder to never again forget to discharge the high voltage capacitor.
How To Discharge The High Voltage Capacitor: The capacitor is discharged by creating a short circuit (direct connection) the two capacitor terminals and from each terminaL to chassis ground bare metal surface. Do this by touching the blade of an insulated-handled screw driver to one terminal, then slide it toward the other terminal until it makes contact and hold it there for a few seconds. (This can result in a rather startling "pop!") Repeat the procedure to create a short between each capacitor terminal and chassis ground. If the capacitor has three terminals, use the same procedure to create a short circuit between each terminal and then from each terminal to ground.
Older Amana-made models (generally those manufactured before 1977) have red, round filter capacitors mounted in the base of the magnetron tube which can also hold a charge. Ground each magnetron terminal by creating a short circuit to chassis ground using the blade of a screwdriver as explained above.

Triacs with three terminals, such as most shown below, can be tested by making a series of resistance checks as outlined below.

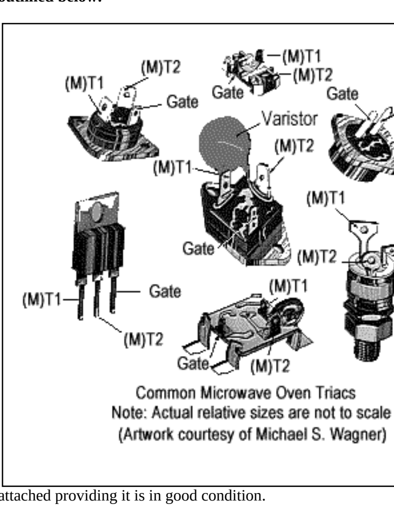

Common Microwave Oven Triacs
Note: Actual relative sizes are not to scale
(Artwork courtesy of Michael S. Wagner)

In-Circuit: Discharge any capacitors, or high-voltage capacitors by shorting them out with a piece of wire or insulated screwdriver. ***BEFORE*** you do that however, make sure it is UNPLUGGED! Just in case it is a HV capacitor, be warned that it may give quite a crack! Repeat the procedure a couple times to make sure they are completely discharged.

Here is the complete testing procedure for **TEST-1:**

1) Unplug the appliance, equipment, or whatever you're working on.

2) DISCHARGE THE HIGH VOLTAGE CAPACITOR

3) First identify the terminals. The three terminals are generally designated as G (gate), T1 and T2 (a rule of thumb: smallest terminal is the gate; medium sized is T1; largest is T2).

4) Carefully remove all harness leads. A soldered-in varactor or snubber may remain attached providing it is in good condition.

5) Set and *zero* the ohmeter to a scale capable or reading about 40 Ohms.

6) Measure from the *gate to T1*, note the reading, then reverse the leads.

7) In each measurement, a normal reading would be in the range of 10 to 200 ohms, depending on the Triac model.

8) Next, set the meter to its highest resisitance scale. Each of the following reading should produce a normal reading of *infinty:*

a. From T1 to T2.
b. From T1 to the gate.
c. From each terminal to chassis ground.

These reading are approximate and may vary with manufacturer, but generally speaking, any results that are significantly different would point to a defective Triac.

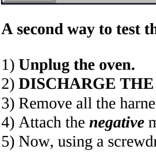

Test 2

A second way to test the Triac is to evaluate its gate-firing capability:

1) **Unplug the oven.**
2) **DISCHARGE THE HIGH VOLTAGE CAPACITOR.**
3) Remove all the harness leads. Set the meter to a scale capable or reading about 50 Ohms.
4) Attach the ***negative*** meter lead to ***T1*** and the ***positive*** lead to ***T2.***
5) Now, using a screwdriver blade, create a momentary short between ***T2*** and the ***gate***. This brief contact should turn the triac "on", thus producing a meter reading of about 15 to 50 Ohms.
6) Next, disconnect one of the meter leads, then re-connect it. The meter should return a reading of ***infinity***.
7) And finally, reverse the meter leads and repeat the tests. The results should be the same.
8) After many experiments with different multimeters and Triacs, I must conclude that this method is not always succesfull.

- Any abnormal tests would suggest a defective Triac.
- Replacement Triacs are generally available from your local appliance parts distributor(like Sears) or electronics store.

If you like, build this simple SCR tester. It will also test TRIACS with good results. A simple "good/bad".

The graphics and most of the text courtesy of *Microtech Electronics.* If you have any question(s), please ask the author of this testing sequence: **J. Carlton Gallawa** or visit his website at **"Microtech Electronics"** to learn more about high voltage, microwaves or how to become a seisoned microwave technician!

Back to Circuits or Gadgets page.

Testing a UJT

Uni Junction Transistor

This testing procedure is for use with a digital multimeter in the OHM's test-range. The UJT is a solid-state 3-terminal (TO-18 case) semiconductor. UJT's are used in pulse/timing, oscillator, sensing, and thyristor triggering circuits. The most common one being probably the 2N2646 from Motorola.

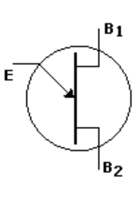

UJT testing is pretty easy once you know how to do it.

1) With a Digital Multimeter, set in the Ohms position, read the resistance between the Base 1 and Base 2; then reverse the meter-leads and take another reading. Regardless of the meter-lead polarity the measured resistance should approximately be equal (high resistance).

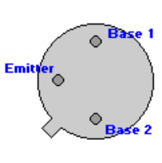

'Bottom' view

2) Now connect the negative (-) lead of the ohmmeter to the emitter of the UJT. With the positive (+) lead, measure the resistance from the emitter to Base 1 and then from the emitter to base 2. Both readings should indicate high resistance and about equal to each other.

3) Exchange the negative lead to the emitter with the positive lead. Measure with the negative lead the resistance between emitter and Base 1 and from Base 2 to emitter. Both readings should show low resistance and about equal to each other.

I bench tested the following UJT models: 2N2646, NTE6401, ECG6401, 2N2647, NTE6409. Tested with the above testing procedures. Testing method was accurate. I also tested faulty UJT's of the same make and models. Testing method was also accurate.

Back to Circuits or Gadgets page.

Coil/Inductance History:

First a bit of history about this remarkable invention of 'electro-magnetism'. Joseph Henry (1797-1878), was one of the many brilliant US scientists who invented *and* used the electro-magnetic 'coil' in his university laboratory. His low-power electro-magnet could control a make-and-break switch in a high-power circuit. Henry believed the potential was in the electro-magnet's use as a control system or device in manufacture, but he was only really interested in the science of the electricity. The electro-magnet or 'relay' was a laboratory trick to entertain his students. Samuel Morse later adapted Henry's electro-magnetic-relay device after re-designing it (and claiming it as his own by patent) using thinner wire, to carry morse-code signals over long kilometers of wire.

In 1846, Joseph Henry was professor of natural philosophy (physics) at the College of New Jersey (now known as Princeton University). He had published scientific articles on a wide variety of subjects, including electro magnetism, optics, acoustics, astrophysics, molecular forces, and terrestrial magnetism, but his reputation was built primarily on his work in basic and applied electro magnetism. Among his discoveries in electro magnetism were mutual induction, self-induction, the electro magnetic relay--enabling him to devise the first electro magnetic telegraph that could be used over long distances--and the concept of the electric transformer. He also invented the first electric motor. Henry was often referred to as the scientific successor to Benjamin Franklin. Today, it is the general opinion that Joseph Henry was the inventor of the telegraph and not Samuel Morse, who did not have a technical background to begin with. Samuel Morse adapted the ideas and inventions of Henry (and Vail) into his own and patented it, making him the owner.

It is certain that Joseph Henry was important to the history of the telegraph in two ways. First, he was responsible for major discoveries in electro magnetism, most significantly the means of constructing electromagnets that were powerful enough to transform electrical energy into useful mechanical work at a distance. Much of Morse's telegraph did indeed rest upon Henry's discovery of the principles underlying the operation of such electromagnets.

Then in 1885, William Stanley (1858-1916), Jr. built the first practical alternating current device based on Lucien Gaulard and Josiah Willard Gibbs' idea. This device was called an induction coil and was very primitive. It was the precursor of the modern transformer. His coil became the prototype for all future transformers and made practical the transmitting of electricity for consumer uses such as lighting.

Born in Brooklyn, New York, William Stanley attended private schools before enrolling at Yale University. He began to study law at age 21 but less than a semester later left school to look for a job in the emerging field of electricity. "Have had enough of this," wrote the 21-year-old Yale freshman in 1879. "Am going to New York." With these words, William Stanley abandoned the career pattern that his father had laid out for him - college, law school, and membership in the family law firm - and set out instead on the more risky and exciting path of electrical invention. The decision marked the beginning of a productive career whose highlights included the invention of the modern type of transformer, and the creation of the business enterprise that was to become General Electric's Pittsfield Works.

Stanley's first job was as an electrician with one of the early manufacturers of telegraph keys and fire alarms. He then worked in a metal-plating establishment before joining Hiram Maxim, inventor of the machine gun and already a pioneer in the electrical industry. As Maxim's assistant, Stanley directed one of the country's first electrical installations, in a store on New York's Fifth Avenue. Stanley gave early evidence of his ability and enthusiasm. As his first employer, inventor Hiram S. Maxim described him: "Mr. Stanley was very young. He was also very tall and thin, but what he lacked in bulk, he made up for in activity. He was boiling over with enthusiasm. Nothing went fast enough for him." This dynamism helped him gain an outstanding reputation in the early electrical industry.

In the 1880s every system for distributing electricity used direct current (DC). But DC transmission over long distances was impractical. Transmitting at low voltage required thick wires. Transmitting at high voltage was dangerous and could not be reduced for consumer uses such as lighting. It was known that alternating current (AC) voltage could be varied by use of induction coils, but no practical coil system had been invented.

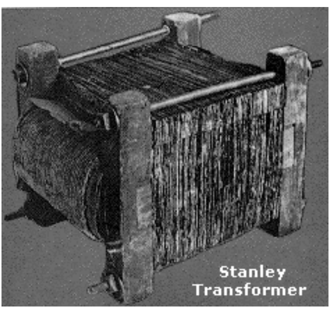

Inventor and industrialist George Westinghouse learned of Stanley's accomplishments and hired him as his chief engineer at his Pittsburgh factory. It was during this time that Stanley began work on the transformer. Actually the first practical AC transformer was developed by Frenchman Lucien Gaulard and Englishman John Gibbs; improvements were made at the Ganz company in Budapest. Westinghouse instructed Stanley and his assistants, Schmid and Shallenberger, to make tests to determine the commercial value of the Gaulard and Gibbs system. He also arranged to have a number of the transformers and a Siemens alternating-current generator forwarded from England to Pittsburgh. Stanley, working under the direction of Westinghouse, devised a further improvement, which consisted in securing the enclosure of the coils by making the core of **E**-shaped plates, the central projections of each successive plate being alternately inserted through prewound coils from opposite sides, thus permitting separate winding and consequently the better insulation of the coils. This form was further improved by Albert Schmid, who extended the ends of the arms of the **E** to meet the central projection. When inserting these plates the extensions were temporarily bent upward, and upon being released each plate formed a closed magnetic circuit about the sides of the coils.

In 1885, ill health almost cut short his career--some say he worked himself too hard. But it proved a disguised blessing, because it necessitated a move to his family home, Great Barrington, Massachusetts. In those peaceful surroundings, he was able to develop some ideas he had suggested two years earlier to his employer, George Westinghouse (who helped finance Stanley's lab) for a new type of transformer. This work resulted, on March 20, 1886, in the demonstration of a prototype system of high voltage transmission employing Stanley's parallel connected transformer. This system was used by him to provide lighting for offices and stores on the town's Main Street.
Stanley received a patent on his transformer: "Induction-Coil", Patent No. 349,611. These various inventions and discoveries led up within a year to commercial production of transformers of high efficiency and excellent regulating qualities. The development was a fine engineering performance in speed and in quality. The most important single contribution was by Stanley. He brought out the parallel connection in which the transformers are connected in parallel, across the constant-potential alternating-current system, instead of being arranged in series, as in the Gaulard and Gibbs connection. He obtained patents on the method, involving the construction of transformers in which the counter electromotive force generated in the primary coil of the transformer was practically equal to the electromotive force of the supply circuit. This is obvious now, but in 1886, when the principles and characteristics of the alternating current were practically unknown, it was a wonderful invention, and revolutionary in character.
On this invention Stanley's fame largely rests. Of course Stanley did not discover or invent a theory of counter electromotive force before any one else had thought of it. Such fundamental things seldom happen in invention. His claim to great and original merit rests on the discovery of a theory which was new to him and the use of it in making a structure of immense importance in the affairs of men. Briefly, all transformers now made are built upon practically the same principles as those that were developed in these early products of the Westinghouse Company.

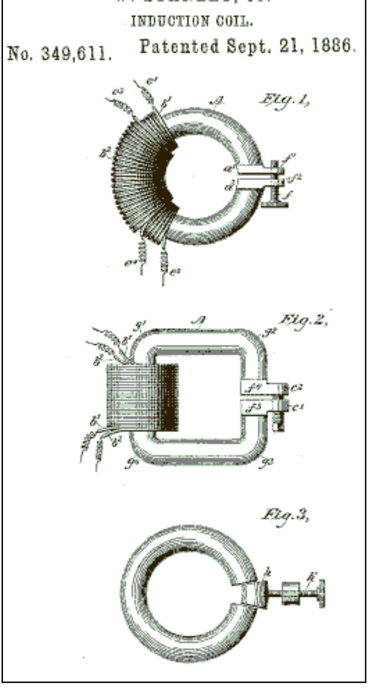

Assisted by William Stanley, George Westinghouse worked to refine the transformer design and build a practical AC power network. In 1886, Westinghouse and Stanley installed the first multiple-voltage AC power system in Great Barrington, Massachusetts. The network was driven by a hydro power generator that produced 500 volts AC. The voltage was stepped up to 3,000 volts for transmission, and then stepped back down to 100 volts to power electric lights.
In 1890 Stanley established the Stanley Electric Manufacturing Company in Pittsfield, Massachusetts, to make transformers and auxiliary electrical equipment as well as electrical appliances. To organize it, he joined forces with two talented associates: John J. Kelley, an outstanding designer of motors: and a former Stanley laboratory worker, Cummings C. Chesney. The company was purchased by General Electric in 1903. Stanley also developed the alternating-current watt-hour meter, making it possible to measure electricity use with a high level of accuracy. Stanley with E. P. Thomson had also invented an incandescent lamp with a filament of carbonized silk. During his lifetime he was granted 129 patents covering a wide range of electric devices. William Stanley died on May 14, 1916.

Inductance:

Inductance (L) is the property of an electrical circuit whereby changes in current flowing in the circuit produces changes in the magnetic field such that a counter EMF is set up in that circuit or in neighboring ones. If the counter EMF is set up in the original circuit, it is called *self-inductance* and if it is set up in neighboring circuit it is called *mutual inductance*.
The unit of inductance is the *Henry (H)* and is defined as that value of inductance in which an induced EMF of one volt is produced when the inducing current is varied at the rate of one ampere per second. The henry is commonly sub-divided into several smaller units, the *milliHenry* (10^{-3} *Henry)* abbreviated *mH*, the *microHenry* (10^{-6} *Henry)* abbreviated *µH*, and the *nanoHenry* (10^{-12} *Henry)* abbreviated *nH*.
The storage of energy in a magnetic filed is expressed in *joules* and is equal to $LI^2/2$ and the dimensions are in *watt-seconds*.

Mutual Inductance:

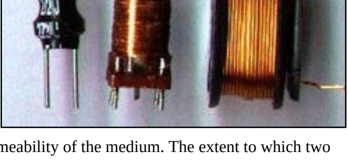

When one coil is near another, a varying current in one will produce a varying magnetic field which cuts the turns of the other coil, inducing a current in it. This induced current is also varying, and will therefore induce another current in the first coil. This reaction between two couple circuits is called *mutual inductance*, and can be calculated and expressed in henrys.
The symbol for mutual inductance is *M*. Two circuits thus joined are said to be *inductively coupled*.
Tee magnitude of the mutual inductance depends on the shape and size of the two circuits, their positions and distances apart, and the permeability of the medium. The extent to which two inductors coupled is expressed by a relation known as *coefficient of coupling (k)*. This is the ratio of the mutual inductance actually present at the maximum possible value.
Thus, when *k* is 1, the coils have the maximum degree of mutual induction.
The mutual inductance of two coils can be formulated in terms of the individual inductances and the coefficient of

coupling with the formula: $M = k\sqrt{L_1L_2}$

Inductors in Series:

Inductors in series are, just like resistors, additive. Provided that no mutual inductance exists.
In this case, the total inductance **L is:** $L = L_1 + L_2 + \ldots$ **etc.**

Where mutual inductance does exist: $L = L_1 + L_2 + 2M$
Where **M** is the mutual inductance.

This latter expression assumes that the coils are connected in such a way that all flux linkages are in the same direction, i.e. additive. If this is not the case and the mutual linkages *subtract* from the self-linkages, the following formula should be used: $L = L_1 + L_2 - 2M$
Where **M** is the mutual inductance.

"Why is this picture from Nikola Tesla here" you may ask. Well, like Joseph Henry, Tesla was decades ahead of time. Tesla had his own variety of "transformer" look-alike while experimenting with his high-voltage inventions.

Core Material:

Ordinary magnetic cores cannot be used for radio frequencies because the "eddy current and hysteresis losses" in the core material become enormous as the frequency is increased. The principal use for conventional magnetic cores is in the audio frequency range below approximately 15,000 hertz, whereas at very low frequencies (50 or 60Hz) their use is mandatory if an appreciable value of inductance is desired.

Copper Wire Table:

Below is part of an example of a so called "Copper Wire Table" with the most popular gauge #'s and associated diameter in milli-meters. I did not specify the 'Mills' or 'Capacity' specs. A 'Mil' is 1/1000 (one thousandth) of an inch.
But this information can be found in the ARRL Handbook for Radio Amateurs which is available at your local library.

Gauge (ga)	Ohms per 1000 feet	Diameter in mm
18	6.510	1.024
19	8.210	.9116
20	10.35	.8118
21	13.05	.7230
22	16.46	.6438
23	20.76	.5733
24	26.17	.5106
25	33.00	.4547
26	41.62	.4049
27	52.48	.3606
28	66.17	.3211
29	83.44	.2859
30	105.2	.2546
31	132.7	.2268
32	167.3	.2019
33	211.0	.1798
34	266.0	.1601
35	335.0	.1426
36	423.0	.1270
37	533.4	.1131
38	672.6	.1007
39	848.1	.0897

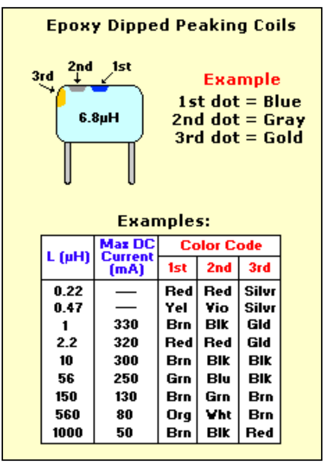

Epoxy Dipped Peaking Coils

Example
1st dot = Blue
2nd dot = Gray
3rd dot = Gold

Examples:

L (µH)	Max DC Current (mA)	Color Code		
		1st	2nd	3rd
0.22	—	Red	Red	Silvr
0.47	—	Yel	Vio	Silvr
1	330	Brn	Blk	Gld
2.2	320	Red	Red	Gld
10	300	Brn	Blk	Blk
56	250	Grn	Blu	Blk
150	130	Brn	Grn	Brn
560	80	Org	Wht	Brn
1000	50	Brn	Blk	Red

Coils Color Code:

Very seldom a small coil or rf-choke will have the value stamped on them. Even the larger coils don't show anything but a code. They get a 'color-code' painted on them much like resistors have but usually only 3 bands or 3 dots, unless they are made by 'Mil Spec' (Military Specification). I opted for a couple of the most commonly used types as an example. The body itself may have a variety of colors depending on the dipped substance used.
This type of coil can be found everywhere these days and I'll take them from whatever board I can. Old vcr and television boards have lots of them. Keep a couple around, just in case.

Suggested Reading:

"Handbook of Electronics Tables and Formulas", by Howard W. Sams & Co., ISBN: 0-672-22469-0
"Radio Handbook", by William I. Orr, W6SAI, Howard W. Sams & Co.,(#22424), ISBN: 0-672-22424-0
"American Radio Relay League", or 'ARRL' book. Any handbook of the ARRL of any year will do.

Copyright and Credits:

Re-posting or taking graphics in any way or form of this project is expressly prohibited by international copyright © laws.

Back to Gadgets Page.

Last updated: July 29, 2004

Make Your Own Shunts

By Dean F. Poeth, II

"While they might not be as accurate as the commercial units, these easy-to-make shunts are more than sufficient for many uses, and cost far less."

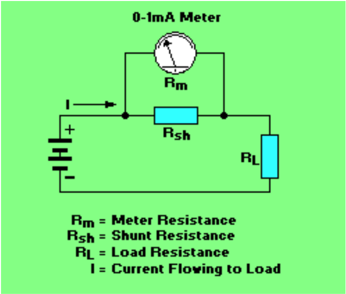

Fig. 1. A shunt is simply a resistor of very low resistance value frequently less than one ohm) that is used to help measure current. It is places in parallel with a meter to decrease its sensitivity by a known amount.

Using a modern multimeter to measure current can sometimes be difficult. Many of these meters will only measure up to one amp. However, may 112-volt DC powered projects draw a lot more than that. If you have ever thought of purchasing a commercial shunt to solve the problem, your know just how expensive they can be. Commercial shunts, while very precise, frequently cost more than the projects they are measuring!
However, there is a better and cheaper alternative that will work perfectly well in most situations: With only a few cents worth of wire and a little know-how, you can make your own shunts. It only takes a few minutes, and it's fun!

What is a shunt?: A shunt is simply a resistor of very low value (frequently less than one ohm) that is used to help measure current. As shown in **Fig. 1.**, the shunt resistor R_{sh} is placed in parallel with a meter to decrease its sensitivity by a known amount. The shunt does that by bypassing or "shunting" most of the current around the meter. The shunt resistor there fore lets your take a standard meter, such as a 0-1miliammeter, and turn it into, say, a 0-20-amp meter.

The Shunt Meter: Before you can make a shunt, you must find a suitable shunt meter. Surplus analog meters can be found at hamfests or mail-order sources for only a few dollars each, and they make excellent shunt meters. For a list of mail order sources of surplus analog meters, as well as new ones, see the sidebar.
When selecting a meter, try to pick a 0-1mA meter in good physical condition and one with a convenient scale on the faceplate. For example, if you need the meter to read 10-amps full scale, then select a meter graduated from 0-1. If you need a full scale reading of 30 amps, select one with a 0-3 graduation. This way the job is easy!
To make a shunt, your will need to know the internal resistance of your meter. Therefore, select a unit that has its internal resistance printed on it, most likely in small letters on the meter face or on the back near the terminals.
If you already have a meter on hand but do not know its internal resistance, there is a simple way it can be determined. If you have a modern *digital* multimeter, set it to its highest resistance range. Connect the multimeter's red (positive) lead to the positive analog meter terminal and the black (common) lead to the analog meter's negative terminal.
Digital multimeters measure resistance by passing a small amount current through the device under test. Do not attempt to use an *analog* multimeter to make this measurement. These older multimeters use much more current to test resistance, enough to potentially destroy some mA meters.
Watching your analog meter, work your way down the DMM's resistance ranges (remember you began at the highest range) until the analog meter's needle moves to a full-scale reading. Note the reading on your DMM, and write it on the back of the meter using a permanent marker. Be careful and take your time. If you go too fast and accidentally pin the meter, it could easily be damaged.
(Tony's Note: I checked a dozen or so meters of different variety and found that this method of measuring the internal resistance of a particular meter is flawed and does not always work. Best is to obtain a meter with this resistance (Ri) written somewhere on the meter.)

Making the Shunt: The shunt is made from a short length of copper wire. All wire has resistance, so we can use that property to make a shunt resistor. To make a shunt, you first need to determine how much current will flow through it. For example, if your meter is going to measure 20 amps full scale, then the shunt wire must be safely able to carry that amount of current.
Let's say you are going to make a 20-amp shunt using a surplus analog 0-1 milliammeter (mA) whose face plate is graduated from 0-1. Go to a copper-wire table (there is one in every *ARRL HANDBOOK for Radio Amateurs*; if you don't have a copy, it is available at almost any public library) and select an appropriate gauge wire. Remember that the smaller the wire gauge, the more current it can safely carry. For most hobby applications, 250 circular mils per amp is more than adequate.
To find the circular mils per amp for the shunt wire, divide the circular mils for the selected wire (found in the copper wire table) by the current you intend to pass through the wire:

$$\text{Circular Mils per amp} = (\text{circular mils for wire}) / (\text{current through the wire}) \quad \text{(Eq. 1)}$$

By using the copper wire table, you will find that 12-gauge wire has a cross-sectional area of 6530 circular mils. By dividing that by 20 amps, we get 326 circular mils/amp, which should work fine. 12 gauge wire is very common, and can be purchased in most hardware stores.
To find the resistance of the shunt, use this equation:

$$R_{sh}=R_m / (n-1) \quad \text{(Eq. 2)}$$

Where Rsh is the resistance of the shunt, Rm is the resistance of the surplus meter, and n is the shunt's multiplication factor. In our example, since we are using a 0-1mA meter and 1 mA=0.001amps, n=20amps / 0.001amps, or 20,000.
Next, let's suppose that the resistance of your meter was 81 ohms. Plugging that resistance and n=20,000 into equation 2 (Eq.2) yields:

$$R_{sh} = 81 / 20{,}000 - 1) = 0.00405 \text{ Ohms.}$$

That's not very much resistance, is it! A shunt having that resistance will pass 19.999 amps through it, and 0.001A (1 mA) will pass through the meter for a full scale reading.
Next, we need to calculate the lenth of our copper wire shunt. Note that as stated in the copper-wire table, 12 gauge wire has a resistance of 1.619 ohms/1000ft. Therefore, the length of the shunt wire (L_s) can therefore be determined using:

$$L_s=R_{sh} / (XV/1000\text{ft.}) = 0.00405 / (1.619/1000\text{ft.}) = 2.5 \text{ ft.}$$

So the 12-gauge wire shunt should be 2 feet 6 inches long when using a 0-1mA meter having an internal resistance of 81 ohms to measure 20 amps full-scale.
If we made this shunt too long, however, we might have trouble with contact resistance. That is because even a good solder joint has a lot of resistance when compared to a 0.00405-ohm shunt. To make sure that the circuit's contact resistance is not part of the shunt resistance, two sense wires may be used. These sense wires are spaced L_s apart on the shunt wire as shown in **Fig. 2.** Any type of wire may used for the sense wires; they are noncritical. This simple feature will greatly increase the accuracy of your shunt.
Now we are ready to make our shunt. Cut a length of 12-gauge solid copper wire (also called Magnet Wire) about 3-feet long. Remove the insulating coating from the wire with a hobby knife or sand paper, being careful not to nick it. Now measure about 2 inches from one end and solder one sense wire there. Carefully measure 2 ft 6 inches from that sense wire and solder the second sense wire in position. Connect the shunt to its meter as shown in fIg. 2, and you're ready to measure current! If you want to make the shunt a little more compact, you can wind it over an insulated screwdriver handle, or something similar, such as a non-conductive wood dowel.

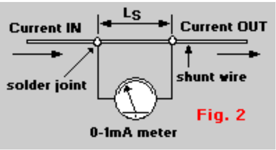

Fig. 2

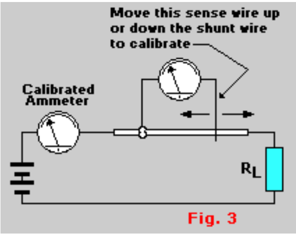

Fig. 3

Calibrating the Shunt: Shunts made using this method can be very accurate. However, improved accuracy can be achieved by calibrating the shunt to a known standard, i.e. a calibrated meter. To do this, build the circuit shown in **Fig. 3.** Make sure that the load resistance, R_L, can safely handle the power. I have found that car tail light lamps make a convenient load for the circuit.
To calibrate the shunt, solder one sense wire into position as described above. Power up the circuit and slide the second sense wire up and down the shunt wire until you find the spot where the shunt meter reads the same current as the calibrated meter. Remove power from the circuit and solder the second sense wire at that spot.

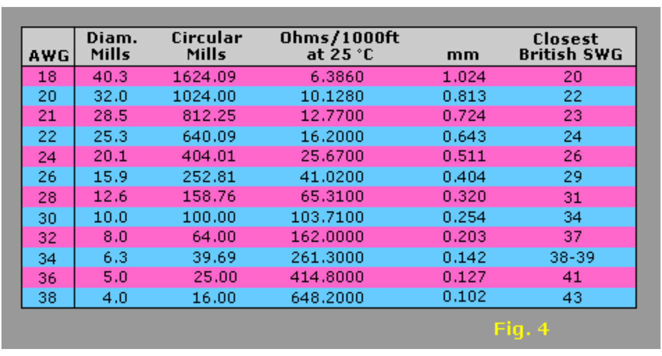

AWG	Diam. Mills	Circular Mills	Ohms/1000ft at 25 °C	mm	Closest British SWG
18	40.3	1624.09	6.3860	1.024	20
20	32.0	1024.00	10.1280	0.813	22
21	28.5	812.25	12.7700	0.724	23
22	25.3	640.09	16.2000	0.643	24
24	20.1	404.01	25.6700	0.511	26
26	15.9	252.81	41.0200	0.404	29
28	12.6	158.76	65.3100	0.320	31
30	10.0	100.00	103.7100	0.254	34
32	8.0	64.00	162.0000	0.203	37
34	6.3	39.69	261.3000	0.142	38-39
36	5.0	25.00	414.8000	0.127	41
38	4.0	16.00	648.2000	0.102	43

Fig. 4

The table above **Fig. 4.** shows the most common wire types I use myself. If you need other AWG or wire information I suggest to purchase the ARRL Radio Amateur Handbook. It contains a HUGE treasure of all kinds of information. I will answer no emails in regards to the Copper Wire Specifications. Buy the ARRL Handbook, you will be impressed!

Conclusion: Using these methods you can make shunts for almost any range of DC currents. What's more, with a little care your should be able to make shunts accurate to within 5-10% if you keep them near room temperature. Of course, these shunts are not nearly as precise or temperature-stable as the commercial versions. Still, if you need one for a non-demanding application(like a variable power supply), or just want to have some fun, grab a few cents worth of wire and make your own shunt!

I fully support this project, since my unit has been in operation for quite a few years now and still using the same battery. Most parts can be obtained via your local electronics store. I will answer all questions but via the message forum only. ***Tony's Message Forum*** can be accessed via the main page, gadgets, or circuits page.

Copyright and Credits:

Source: "Electronics Now", August 1998, page 51. Copyright © Dean F. Poeth II, Ph.D.,K8TM and Gernsback Publications, Inc. 1998. (Gernsback Publishing no longer exists).
Document updates & modifications, all diagrams, PCB/Layout drawn by Tony van Roon.

© by Tony van Roon (VA3AVR)

First a bit of history about the remarkable development of this 'relay' device. Joseph Henry (1797-1878), a brilliant US scientist who invented and used the electro-magnetic relay in his university laboratory. His low-power electro magnet could control a make-and-break switch in a high-power circuit. Henry believed the potential was in the relay's use as a control system in manufacture, but he was only really interested in the science of the electricity. The relay was a laboratory trick to entertain students. Samuel Morse later used Henry's relay device, after re-designing it using thinner wire, to carry morse-code signals over long kilometers of wire.

In 1846, Joseph Henry was professor of natural philosophy (physics) at the College of New Jersey (now known as Princeton University). He had published scientific articles on a wide variety of subjects, including electro magnetism, optics, acoustics, astrophysics, molecular forces, and terrestrial magnetism, but his reputation was built primarily on his work in basic and applied electro magnetism. Among his discoveries in electro magnetism were mutual induction, self-induction, the electro magnetic relay--enabling him to devise the first electro magnetic telegraph that could be used over long distances--and the concept of the electric transformer. He also invented the first electric motor. Henry was often referred to as the scientific successor to Benjamin Franklin. Today, it is the general opinion that Joseph Henry was the inventor of the telegraph and not Samuel Morse, who did not have a technical background to begin with. Samuel Morse adapted the ideas and inventions of Henry (and Vail) into his own and patented it, making him the owner.

It is certain that Joseph Henry was important to the history of the telegraph in two ways. First, he was responsible for major discoveries in electro magnetism, most significantly the means of constructing electromagnets that were powerful enough to transform electrical energy into useful mechanical work at a distance. Much of Morse's telegraph did indeed rest upon Henry's discovery of the principles underlying the operation of such electromagnets.

Below are a couple other thoughts collected from the Smithsonian Institute (of which Henry was First Secretary), and Harvard University:

"... Secondly, Henry became an unwilling participant in the protracted litigation over the scope and validity of Samuel Morse's patents. ..."

"... Joseph Henry began his research into electro magnetism in 1827, while he was an instructor at the Albany Academy in New York. By 1830, he achieved two major breakthroughs .... His first crucial innovation, which he demonstrated in June 1828, was to combine Schweigger's multiplier with Sturgeon's electro magnet to obtain an extremely powerful magnet. While Sturgeon loosely wrapped a few feet of uninsulated wire around a horseshoe magnet, Henry tightly wound his horseshoe with several layers of insulated wire. In March 1829 he demonstrated an electro magnet with 400 turns, or about 35 feet, of insulated wire. This magnet, Henry remarked later, "possessed magnetic power superior to that of any before known."

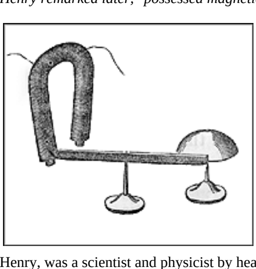

"... Henry did set out to demonstrate the practicality of an electro magnetic telegraph immediately after his paper appeared. His prototype consisted of a small battery and an "intensity" magnet connected through a mile of copper bell-wire strung throughout a lecture hall. In between the poles of this horseshoe electro magnetic he placed a permanent magnet. When the electro magnetic was energized, the permanent magnet was repelled from one pole and attracted to the other; upon reversing battery polarity, the permanent magnet returned to its original position. ... Henry caused the permanent magnet to tap a small office bell. He consistently demonstrated this arrangement to his classes at Albany during 1831 and 1832."

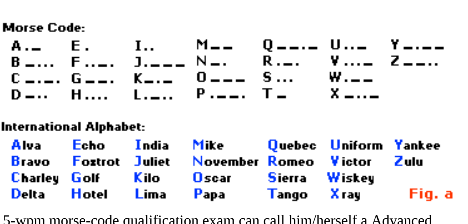

In short, this man, Joseph Henry, was a scientist and physicist by heart and a true teacher to his students. As a reward, they (not his students) stole his ideas and scientific experiments. For that reason I'm convinced that Morse was a fraud, preying on the ideas and inventions (like the telegraph) of others and putting his patent on it (obtained on October 3, 1837). I do credit Samuel Morse, however, for the morse-code, which is still used to this date and no person without a 5-wpm morse-code qualification exam can call him/herself a Advanced Radio Amateur! (see Fig. a).

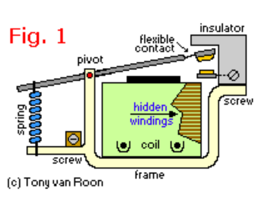

Since this important day in 1836, when Joseph Henry transmitted a small electrical current down a wire to energize a remote coil and the completed circuit ringing a bell some 150 years ago, the relay has undergone steady evolution and today's relays are far removed from the crude and clumsy relays of Henry's days. In our millennium, solid-state has replaced the actual relay in many circuits, especially in AC applications. To sum it all up, the relay (and solenoids) have survived the tube, transistor, and integrated circuit (IC) eras.

Basically, a relay is an electrically operated switch, and actually the predecessor of the transistor. Solenoids are relays also but the very large types which carry huge amounts of current. Relays are the smaller types. Relays come in three types: electro mechanical, solid-state, and so-called hybrids which are a combination of the first two. There are also some specialized types that fall into neither category but I will deal with them later in this tutorial. Lets take electro-mechanical types first, they are available in three main models; armature, plunger, and reed. The

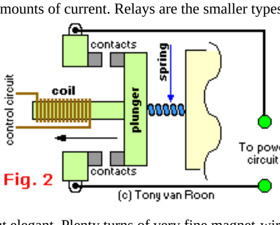

Armature Relays are the oldest (see Fig. 1) but elegant. Plenty turns of very fine magnet-wire are wound around an iron core to form an electro-magnet. The movable metal armature has an electrical contact that is positioned over a fixed contact attached to the relay frame. A spring holds the armature up so that the movable and fixed contacts are normally separated (open). When the coil is energized, it attracts the pivoting armature and pulls it down, closing (make) the SPST contacts and completes the power circuit. Vice-versa, this relay can be made to open the contacts instead of closing them, or can do both either way. The armature relay is pretty old and no longer used in new applications, they do still exist however and are being used still at the time of writing this document.

The **Plunger-Relay** type have a plunger instead of a pivoting armature, as shown in Fig. 2 and uses a solenoid action to close the contacts. The electro magnetic core is hollow and a metal rod or plunger extends halfway through it when the relay is not energized.
When energized, the coil draws the plunger in and a shorting-bar, attached to the end of the plunger, closes the contacts. When the coil is de-energized, the spring (which is mounted over a section of the plunger) retracts the plunger and positions the assembly in the idle position breaking the contacts.
The coil plunger design allows much greater contact travel than the pivoting armature design, thus allowing wide contact separation. The increased space allows plunger systems to be used with higher voltages than armatures. The higher closing force of the solenoid permits the use of larger contacts and provides greater current handling capability. One application of a plunger-type relay is an electronic lock or door opener.

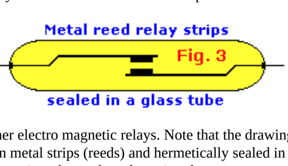

Since their inception, electro-magnetic relays have improved in sensitivity, switching complexity, current handling, response time, and reliability. It allowed for miniaturization in radios, cassette recorders, Radio Control(R/C), NASA, cameras, and other home electronics applications. Being relatively small, **Reed Relays** fill the demand for all sorts of 'small' stuff. The use of flexible reeds and self-attraction distinguishes the reed relay, see Fig. 3, from other electro magnetic relays. Note that the drawing shows the reed-relay without the actuator coil. The contacts are mounted on thin metal strips (reeds) and hermetically sealed in a glass tube. This tube is surrounded by a magnetic coil which, when activated, magnetizes the reeds and causing them to attract each other which closes the contacts. When the coil is de-energized, the spring tension in the reeds causes them to separate again. This type of design has the advantages of high speed operation, long life, and very low price. One of the great advantages reed relays share with other electro magnetic relays is the relative ease with which they can be fitted with multiple contacts. As in the armature and plunger designs, the contact mechanisms can be stacked to provide multiple circuit-close or open designs, or even a combination of both, all activated by a single coil. In reed relays, multiple contact pairs, but in individual tubes, can be stacked and used with a single coil in a very small space. This is not a feature of solid-state relays.

Some Relay-driver Examples using regular components:

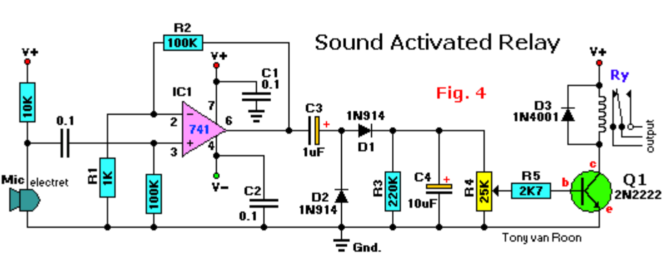

Fig. 4 **Sound-Activated** type. The relay remains dormant until the op-amp activates upon sound via the electret-microphone. The input stage is a regular off-the-shelf 741 operational amplifier and connected as a non-inverting follower audio amplifier. Gain is approximately 100 which you can raise by increasing the value of R2. The amplified signal is rectified and filtered via C3, D1/D2, and R4 to an acceptable DC level. Potentiometer R5 is used to set the audio level to a desired sensitivity value to activate the relay via transistor Q1. Diode D3 is mounted over the relay coil to absorb sparks. The op-amp configuration in this particular drawing needs a dual voltage power supply which can be made from two 9-volt batteries. (Circuit diagram modified by Ron Harrison to resolve mic sensitivity problems).

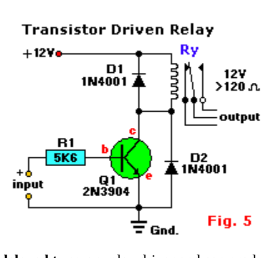

Fig. 5 This relay driver **boosts** the input impedance with a regular 2N3904 transistor. Very common driver. It can drive a variety of relays, including a reed-relay. Transistor Q1 is a simple common-emitter amplifier that increases the effective sensitivity of the 12 volt relay coil about a 100 times, or in other words, the current gain for this circuit is 100. Using this setup reduces the relay sensitivity to a few volts. R1 restricts the input current to Q1 to a safe limit (the impedance is equal to the value of R1 plus 1K). Diodes D1 and D2 are EMF dampers and filter off any sparking when the relay de-energizes.

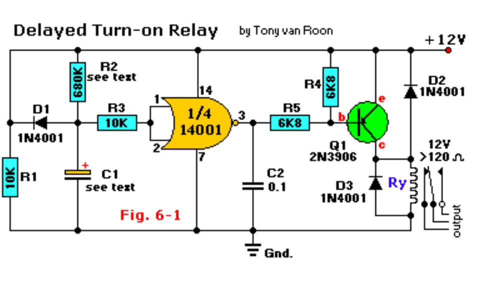

Fig. 6-1 is a **delayed turn-on** relay driver and can produce time delays for up to several minutes with reasonable accuracy.
The 14001 (or 4001) CMOS gate here is configured as a simple digital inverter. Its output is fed to the base of a regular 2N3906 (PNP) transistor, Q1, at the junction of resistor R5 and capacitor C2. The input to IC1 is taken from the junction of the time-controlled potential divider formed by R2 and C1. Before power is applied to the circuit, C1 is fully discharged. Therefore, the inverter input is grounded, and its output equals the positive supply rail; Q1 and RY1 are both off under this circuit condition. When power is applied to the circuit, C1 charges through R2, and the exponentially rising voltage is applied to the input of the CMOS inverter gate. After a time delay determined by the RC time constant values of C1 and R2, this voltage rises to the threshold value of the CMOS inverter gate. The gate's output then falls toward zero volts and drives Q1 and relay RY1 'ON'. The relay then remains on until power is removed from the circuit. When that occurs, capacitor C1 discharges rapidly through diode D1 and R1, completing the sequence. The time delay can be controlled by different values for C1 and R2. The delay is approximately 0.5 seconds for every µF as value for C1. The delay can further be made variable by replacing R2 with a fixed and a variable resistor equal to that of the value of R2. Taken the value for R2 of 680K, it would be a combination of 180K for the fixed resistor in series with a 500K variable trim pot. The fixed resistor is necessary.

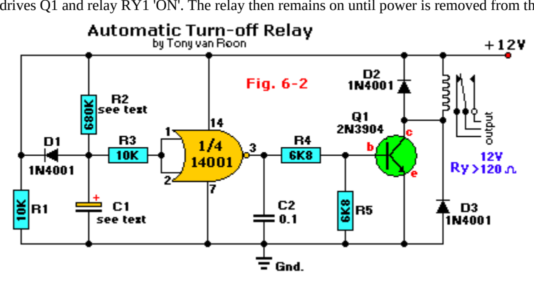

Fig. 6-2 is configured in an automatic turn-off mode. It shows how the circuit function of Fig. 6-1 can be reversed so that the relay turns on when power is applied but turns off again automatically after a preset delay. This response is obtained by modifying the relay-driving stage for an NPN transistor like the 2N3904. It is worth noting again that the circuits in **Fig. 6-1** and **Fig. 6-2** each provide a time delay of about 0.5 seconds for every micro-Farad in the value of capacitor C1. This permits delays of up to several minutes. If desired, the delay periods can be made variable by replacing resistor R2 with a fixed *and* variable resistor in series whose nominal values are approximately equal of the total value of R2 (680K).

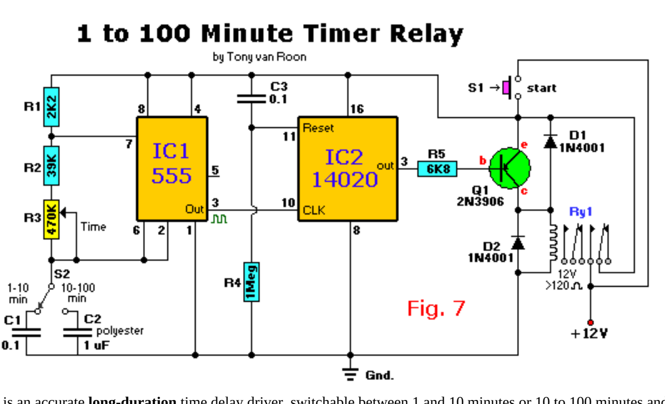

Fig. 7 This is an accurate **long-duration** time delay driver, switchable between 1 and 10 minutes or 10 to 100 minutes and whose function does not depend on electrolytic capacitors. Film dielectric caps have been selected. IC1 is configured as a free-running astable multivibrator which frequency is divided down by IC2, a 14020 (or 4020) CMOS 14-stage, ripple-carry binary divider. Consequently relay RY1 turns on as soon as switch S1 is closed, and it turns off again when the 8192nd astable pulse arrives. This method provides time periods ranging from 1 to 100 minutes, depending on the switch setting of S2.

Solid State Relays:

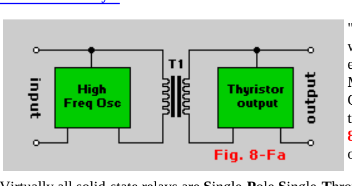

"Solid-State-Relay" (referred to as 'SSR' for short) means switching without any mechanical means. A solid-state **relay** is nothing more than a electronic switch, which can be a Triac, SCR, HexFet, or a High Speed MosFet, and an opto-isolator. Some are application dependent. Control-to-load isolation is provided either by opto-isolators or transformers. Solid-state relays are available in AC and DC versions; **Fig. 8a/b/c/d/e** shows typical block diagrams. All approaches shown use an opto-isolator to separate the control and drive segments.

Virtually all solid-state relays are **S**ingle-**P**ole **S**ingle-**T**hrow, **N**ormally **O**pen (SPST-NO) devices, where the outputs turn on in response to a control voltage. The majority take operating power from the control I/O, although some require separate DC logic power. The simplest DC input circuits use an LED optoisolator and series current-limiting resistor.

The resistor is usually sized for a 5-volt logic input, and results in a specified "ON" range of 3-6 volts DC. For wider operating ranges (typically 4-32 volts DC), the resistor is replaced by a constant-current diode. Then, AC input circuits rectify and filter the control input before applying it to the LED. Typical AC/DC LED currents can vary from 5 to 22mA.

AC and DC Outputs:

The optoisolator photocurrent is amplified and used to drive whatever output device the relay is connected to, whether a transistor for DC outputs, a thyristor for AC, or a power MOSFET for either. The power for the drive circuitry is taken either from the output load or is supplied separately. In some MOSFET designs, the photocurrent is sufficient to drive the output device.

Table 1

Output	AC or DC	Package Style	Max Load Currents	Max Load Voltages	Volt Drop (on) at Rated Load	Leakage Current (off) At 25°C
Bipolar Transistor	DC	Dual Inline (DIP)	500mA 50mA	60Vdc 250Vdc	1 - 1.5V	20µA
		Input/ Output Module	3.5A 1A	60Vdc 200Vdc	1.2 - 1.75V	10µA - 1mA
		Power	2 to 20A	50Vdc	1.5 - 2V	5 - 15mA
		Power (High Voltage)	to 5A	250Vdc	2V	10µA
Thyristor (Triac or SCR)	AC	Dual Inline (DIP)	0.3 to 1A RMS (to 3A RMS on heat sink)	140 or 280V RMS	1.5V max	10µA - 1mA
		Input/ Output Module	3.5A RMS	140 or 280V RMS	1.5V max	2 - 5mA
		Power	10 - 40A RMS	140 to 280V RMS	1.5V max	2 - 15mA
Power MOSFET	AC DC	Dual Inline (DIP)	100 - 500mA (Some to 1A)	60 - 300V	Resistance 0.25 - 50 ohms	Resistance typically 100Meg

Table 1 summarizes typical specifications.

Normally, DC output devices like those in Figs. 8-Fc and Fd use an NPN transistor and may include a Zener diode across the output for transient suppression. The transistor will drop some voltage in the "ON" state, and the drive circuit will need some current to operate. Typical output drop is 1-2 volts at the full rated load current, while the "OFF"-state leakage may range from approximately 10µA-1mA.
Most AC output devices include zero-voltage-switching circuitry. Logic detects when the AC load voltage crosses zero (changes polarity) and delays the triac turn-on pulse until then. The triac turns on a the next zero crossing after the input goes high. Once triggered, it remains on until its current goes to zero. Zero-voltage and zero-current switching minimize transients and **E**lectro**M**agnetic**I**nterference (EMI). The RC snubber in Fig. 8-Ff suppresses rapid voltage changes that can inadvertently turn on the thyristor.
In some applications, having the output turn on instantly is desirable. Relays referred to as "random turn-on" are designed without zero-voltage switching. Turn-off still occurs at zero-current, due to the inherent latching effect of thyristors. As with DC output relays, the thyristor drops voltage while conducting, while the drive circuitry requires power to operate. In addition, th snubber passes AC leakage in the "OFF" state. Typical "ON"-state voltage 1.6 volts, while "OFF"-state leakage is 2-20mA for 60Hz power. With recent advantages in power MOSFET's, solid-state relays can be designed with lower "ON"-state voltage drops, and greatly reduce "OFF"-stage leakage. These MOSFET's (and HexFets) offer bidirectional current flow, near-zero gate-drive current, no inherent source-to-drain offset voltage, and low "ON"-state (rDS) resistance and "OFF"-state leakage.

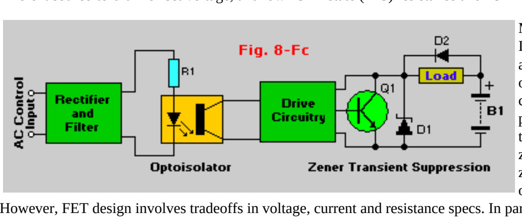

Most FET-output relays are housed in Dual-Inline-Packages (DIP's). Their main use is as a replacement for reed relays, where low offset and low leakage are important, and for control of low-power AC/DC loads. High power AC loads are best controlled by thyristors, which are easily controlled for zero-voltage turn-on; they also offer inherent zero-current turn-off, and produce lower output-voltage drop at high currents.
However, FET design involves tradeoffs in voltage, current and resistance specs. In particular, high-voltage FET's have higher "ON" resistances, making them unsuitable for switching high-current line-voltage loads. Typical DIP relays have 70-500mA current ratings, "OFF"-state leakage resistances of 100 MegaOhms or more, and "ON" resistances from about one ohm for a 60-100 volt rating, to 25-50 ohms for a 300-400 volt rating. Switching times range from 10-100µSec.

I/O Isolation:

The majority of solid-state relays use opto-isolators. All off at least 1.5 kilo-volt RMS I/O breakdown, and 2.5 or 4 kilo-volt ratings are common. Most of them have been rated, listed, or approved by safety agencies like UL, CSA, and VDE. Transformer coupling is also used to isolate solid-state relays.

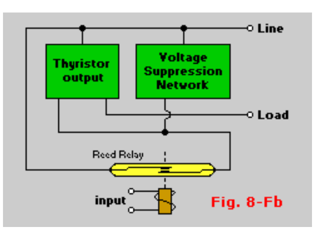

Fig. 8-Fc shows a transformer-coupled AC-output relay; DC and AC/DC FET relays are also available with transformer coupling. The control input powers an oscillator, the output which is coupled through a small pulse transformer to trigger the output thyristor. Circuitry of the type shown produces random turn-on operation; transformer-coupled relays generally don't include zero-voltage switching circuitry.
Transformer coupling allows faster switching. The oscillator frequency is typically 1-3MHz, resulting in switching times as low as 1µSec. Opto-isolators exhibit slower response, with times for DC versions typically 10 to 100µSec. They can be designed for slightly higher temperatures, being free of LED limitations. However, achieving breakdown voltages above 1.5 kilovolts is easier using optical techniques.

Hybrid Relays:

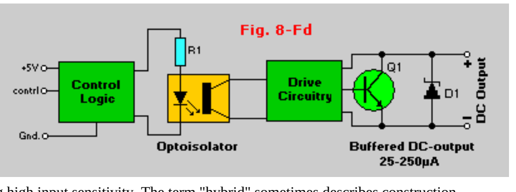

Hybrid relays marry reed relays with a solid-state power output. **Fig. 8-Fb** shows a thyristor version; DC outputs are also offered. The hermetically sealed reed contacts switch only low power, and last 10 million operations or even longer. The turn-on time is that of the reed relay, about 1 mSec. Other hybrid relays are the reverse, using a solid-state input amplifier driving a reed-relay output, the obvious advantage being high input sensitivity. The term "hybrid" sometimes describes construction technique, rather than method of operation. In some catalogs you'll find hybrid solid-state relays with no mechanical components at all.

Self-Powered and Buffered Relays:

So far, all the relays that have been discussed until now have been "self-powered," in that they take operating power from the applied signals. All models, whether optoisolated, transformer coupled, of hybrid, require approximately 5-50mA at their inputs. Some, notably thyristor-output relays with zero-voltage switching, also take operating power from output loads, although none require separate power connections.
Buffered relays offer improved input sensitivity at the expense of needing separate DC power, and are usually used in systems that already include DC power supplies (not as stand-alone devices). **Fig. 8-Fd** shows a buffered DC-output relay. The input circuitry and the LED are powered from a separate logic supply, allowing the logic input current to be typically 25-250µA.

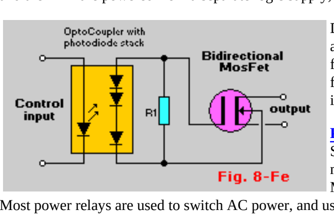

Due to near-zero gate current, power MOSFet's can be driven directly from a series stack of photodiode junctions. The "photo voltaic-generator" stack from International Rectifier shown in **Fig. 8-Fe** is constructed using IC fabrication techniques, and exposes a series of photo diodes to LED illumination. No operating power is required from the load.

Package Styles:

Solid-State relays are generally grouped into DIP's, power relays, and I/O modules. DIP relays are available with transistor (DC), thyristor (AC), or MOSFET (AC/DC) outputs, and with optoisolator or transformer coupling. Most power relays are used to switch AC power, and use thyristor switching with optoisolator coupling. Transistor (DC) outputs and transformer coupling are also available. I/O modules are always opto-coupled, and don't offer MOSFET outputs;

Safety Issues:

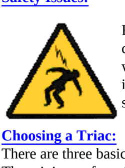

Building an SSR requires putting 115/220 volts on a printed circuit board. From an electrical point of view, that can be perfectly safe. However, it is good practice to cover all printed circuit tracks on the 115/220VAC side with a silicon sealer, varnish, lacquer, or even nail polish. Couple layers will do fine. Also, try to use only isolated Triacs (where the case is electrically isolated from the Triac), and ground the heat sink to the AC safety wire (earth ground, or green wire).

Choosing a Triac:

There are three basic requirements when choosing the output Triac. First is to make sure that it will handle the voltage required. The minimum for a 115-volt AC line requires a 200-volt Triac. A 220-volt line requires a 400-volt Triac. Remember that those are the minimum so, for a few cents more, it pays to use the next highest voltage rating.
The next requirement is current. A 6-amp Triac will handle 6 amps only if it is properly heat sinked. As a word of warning, motors draw a lot more current on start-up than they do during normal operation, sometimes as much as ten time more. Keep that in mind when you design your own.
The third requirement is the gate current. The Motorola MOC3010 optoisolator will provide about 100 milliamps of drive current for the output Triac. That should be adequate for any Triac you can find in a TO-220 package. Just in case it is not sufficient for your design, you can use a transistor as a current-sink.
Although not really a strict requirement, an isolated Triac is good practice and a good safety precaution. Isolated Triacs (usually listed in catalogs as iso-tab) provide electrical isolation from the electrical connections to the case. Early Triacs were not normally isolated. That meant that you had to use mica washers and thermal grease. Thermal grease is still a good idea, but the mica washer isn't required for isolated Triacs. If you don't know whether or not your Triac is isolated, simply measure the resistance from each lead to the case. An isolated Triac will measure open on all three leads.
Warning: The Radio Shack 400-volt, 6-amp Triac (part number 276-1000) will work well but is NOT isolated. You ***must*** use a TO-220 mica washer and thermal grease if you plan to use that device.

Zero-Voltage Switching:

I can hear you mumbling already... "what the heck is zero-voltage switching..."? In normal operation the trigger side of the relay is totally asynchronous to the AC side. That means that a trigger could occur during any part of the sine wave. If the trigger occurs near a peak (90 or 270 degrees), a large current will flow into the load almost instantly. That creates a lot of RFI (Radio Frequency Interference) and also is very hard on the filament of ordinary light bulbs. In order to prevent that, zero-crossing SSR's accept the trigger at any time but delay turning on the AC load until the next time the AC voltage passes through zero volts. Now you know. I personally don't use any other type.

Construction of a SSR:

Below is good working Solid State Relay using an opto-isolator and a Triac. Use of the shown printed circuit board is highly recommended but not required. **Remember to isolate the AC tracks when you're all done!**

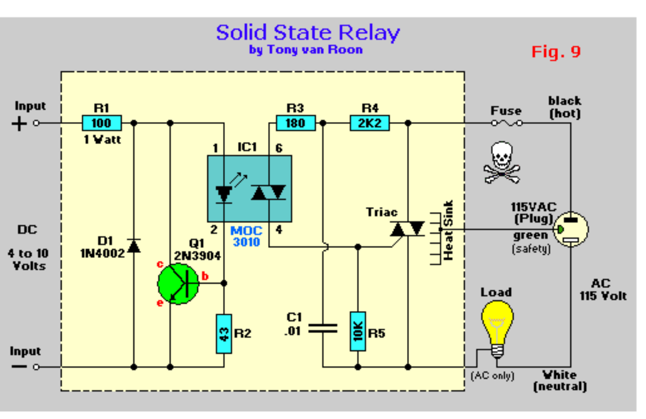

For a simple SSR, an optoisolator such as the Motorola MOC3010 or the NTE3047 will be sufficient. For a zero-crossing SSR, a MOC3031 or NTE3049 will do. May companies make optoisolators. Make sure yours has a "Triac output" and that the pinouts are compatible with your design. Table 2 shows some typical Triac output optoisolator specifications. The models shown are already a decade old but still widely used and available.
Again, although the SSR can certainly be build without using the PCB, using one makes assembly using the layout in **Fig. 9** a snap. The only precaution, other than the one about working with 115/220/220 AC volts, is to heatsink the Triac. If you leave the leads on the Triac long, it should be simple matter to find some heat sink to attach to the Triac. Just remember to connect the heat sink to earth-ground. Even if you're using an isolated tab Triac, the earth ground is still necessary. Otherwise you should buy your solid-state relays from a reliable company--don't build them yourself.
Remember that SSR's can only switch an AC line. Trying to switch a DC line will result in a relay that closes but never opens... Have fun!

Couple More Circuits To Play With:

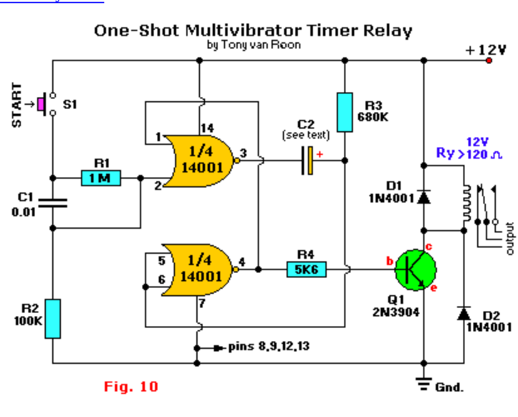

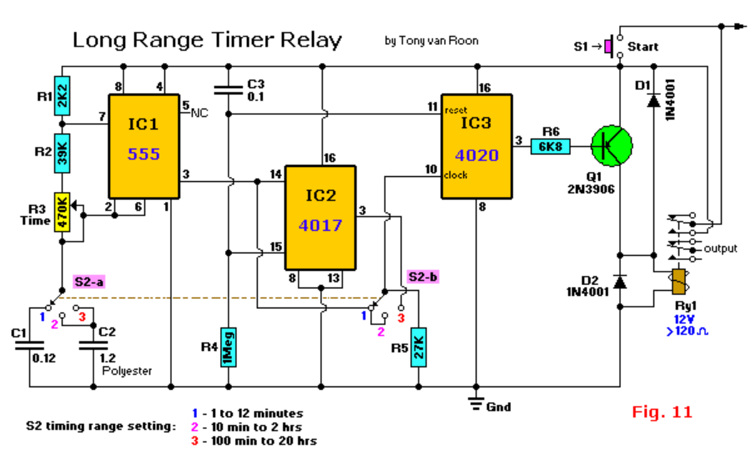

Fig. 10: This circuit shows a pair of CMOS NOR gates which form a push-button-activated one-shot multivibrator relay-switching circuit that provides delays up to several minutes with resonable accuracy. The relay turns on as soon as the START switch S1 is closed. However, it turns off again after a preset delay of about 0.5 seconds per microFarad (µF) of the value of capacitor C2. The two CMOS gates are configured as a manually-triggered monostable multivibrator whose output is fed to the relay through R4 and transistor Q1.

Fig. 11: This one shows a 'long-range timer relay' switching circuit which spans 1 minute to 20 hours in three ranges using a three-step, two-deck mechanical rotary switch. IC1, the 555 timer/oscillator does the time
IC2 (4017) is a CMOS decade counter IC, a five-stage Johnson counter with 10 decoded outputs. Inputs include a CLOCK, a RESET, and a CLOCK INHIBIT signal. This IC, together with IC3 and the 3-step rotary switch, can provide a maximum division ratio of 81,920 making it possible to time for periods up to 20 hours or so. Circuits like this are used in battery chargers and area security lighting systems with time-controlled turn-off.
IC3 (4020) is a CMOS 14-stage, ripple-carry binary divider. Normally a 'high' would occur as soon as switch S1 is closed and a 'low' when the 8192nd astable pulse arrives. All counter stages of IC3, the 4020, are master-slave flip-flops. The state of a counter advances one count on the negative going transition of each input pulse, and a high level on the RESET line resets the counter to its all zeros state. All inputs and outputs are buffered.

Copyright and Credits:

"Relay Output Circuits", by Ray Marston, Electronics Now Magazine, July 1994.
"All About Relays", by Harry L. Trietley, Radio Electronics Magazine, December 1989.
"Winning the Relay Race", by Alvin G. Sydnor, Popular Electronics Magazine, August 1989

Data Sheet for various components

by Tony van Roon

To enlarge any of the diagrams, just click on it...

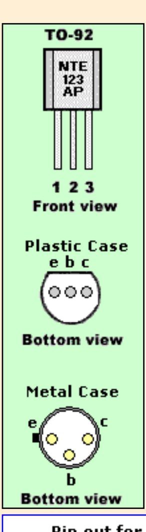

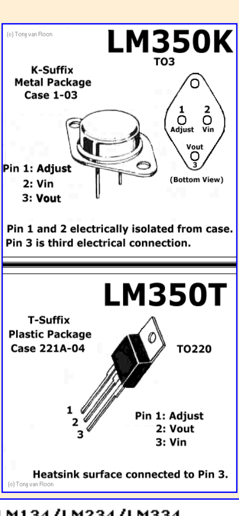

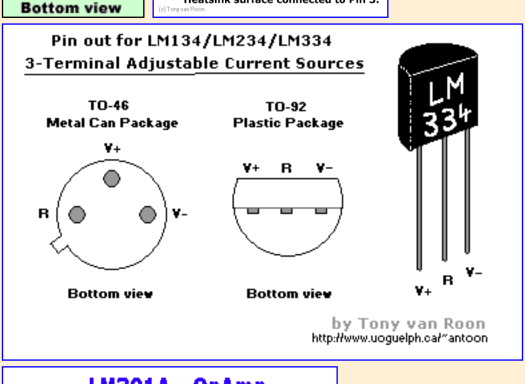

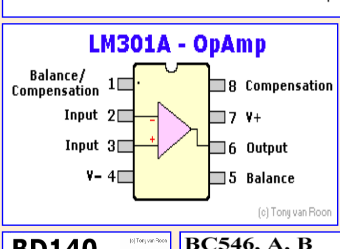

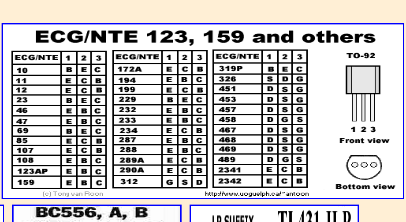

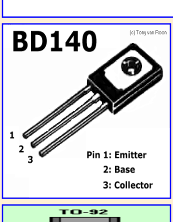

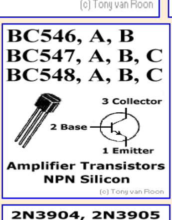

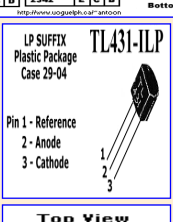

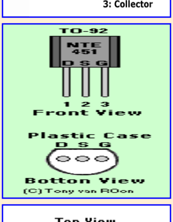

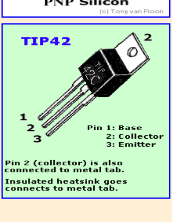

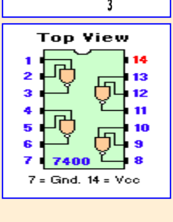

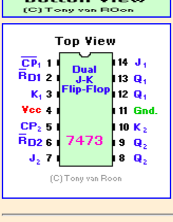

Back to Gadgets Menu page

Radio Shack Part Numbers

All listed resistors are for Carbon, 1/4 Watt, 5% tolerance, unless indicated by 'WW' which stands for 'Wire-Wound' and have 10% tolerance, except for the N.I. (Non Inductive) types which are 5%. Potentiometers of the 'Audio' type are indicated with 'Au' and similar for the linear type with 'lin'. Precision Metal Film resistors are sold in bags of 50 with 12 popular values.
For capacitors, the (A) stands for 'Axial', (R) stands for 'Radial' (e.i. horizontal or vertical mounting), (C) means 'Ceramic', (NP) means 'Non-Polarized'. Over time, some parts may become obsolete and others added. I will try to list the types which are used in all my projects, if available at Radio Shack.

Component	Value	Part Number	Component	Value	Part Number
Resistor	10 ohm	271-1301	Resistor	100 ohm	271-1311
Resistor	150 ohm	271-1312	Resistor	220 ohm	271-1314
Resistor	270 ohm	271-1314	Resistor	330 ohm	271-1315
Resistor	470 ohm	271-1317	Resistor	1K	271-1321
Resistor	2K2	271-1325	Resistor	3K3	271-1328
Resistor	4K7	271-1330	Resistor	10K	271-1335
Resistor	22K	271-1339	Resistor	33K	271-1341
Resistor	47K	271-1342	Resistor	100K	271-1347
Resistor	220K	271-1350	Resistor	315K	271-1337
Resistor	470K	271-1354	Resistor	1Meg	271-1356
Resistor	15K	271-1337	Resistor	10Meg	271-1365
Resistor	560	271-8020	Resistor	2.2Meg	271-8061
Resistor ww/5w	0.47 ohm	271-130	Resistor ww/10w	1.0 ohm	271-131
Resistor ww/10w	10	271-132	Resistor (ww/10w)	50	271-133
Resistor ww/10w	100	271-135	Resistor ww/20w	8 (N.I)	271-120
Potentiometer (Au)	5K	271-1720	Potentiometer (Au)	10K	271-1721
Potentiometer (Au)	100K	271-1722	Potentiometer (Au)	---	---
Potentiometer (lin)	4K7	271-1714	Potentiometer (lin)	10K	271-1715
Potentiometer (lin)	50K	271-1716	Potentiometer (lin)	100K	271-092
Capacitor (C)	0.1µF	272-1069	Capacitor (C)	0.22µF	272-1070
Capacitor (A)	0.22µF	272-1070	Capacitor (A)	4.7µF/35V	272-1012
Capacitor (A)	10µF/35V	272-1070	Capacitor (A)	47µF/35V	272-1015
Capacitor (A)	100µF/35V	272-1016	Capacitor (A)	470µF/35V	272-1018
Capacitor (A)	1000µF/35V	272-1019	Capacitor (A)	4700µF/35V	272-1022
Capacitor (A)	1000µF/50V	272-1047	Capacitor (A)	2200µF/50V	272-1048
Capacitor (R)	1000µF/16V	272-985	Capacitor (R)	4.7µF/35V	272-1024
Capacitor (R)	10µF/35V	272-1025	Capacitor (R)	22µF/35V	272-1026
Capacitor (R)	47µF/35V	272-1027	Capacitor (R)	100µF/35V	272-1028
Capacitor (R)	220µF/35V	272-1029	Capacitor (R)	470µF/35V	272-1030
Capacitor (R)	100µF/50V	272-1044	Cap. Trimmer	6 - 50pF	272-1340

Component	Value	Part Number	Component	Value	Part Number
Cap. Trimmer	95 - 420pF	272-1336	Metal Oxide Var.	Standard	276-570
Mini Buzzer	1.5 - 3V	273-053	Thermistor	10K @ 25°	271-110
Mini Buzzer	6V	273-054	Relay 12V, Mini	SPDT 10A	275-248
Mini Buzzer	12V	273-055	Relay 12V, Mini	DPDT 1A	275-249
Buzzer 12V	Extra Loud	273-051	Relay 5V, DIP	SPDT 2A	275-243
P. Transducer	1500-3000Hz	273-073	Relay 5V, Micro	SPDT 1A	275-240
Piezo Buzzer	4-28Vdc	273-060	Relay 12V, Micro	SPDT 1A	275-241
Diode	1N4148/1N914	276-1122	Relay 5V, Reed	SPDT 1A	275-232
Diode	1N4001	276-1101	Relay 12V, Reed	SPDT 1A	275-233
Diode	1N4003	276-1102	Relay 7-9V, Mini	SPDT 2A	275-005
Diode	1N4004	276-1103	Relay 12V + socket	DPDT 3A	275-8206
Diode	1N4005	276-1104	Relay 12V, Plug-in	4PDT 3A	275-8214
Diode	1N34A (Ge)	276-1123	Heat Sink	TO-220	276-1363
Zener 5V1	1N4733	276-565	LED	Blinking	276-036
Zener 6V2	1N4735	276-561	LED, Jumbo	2-in-1	276-065
Zener 9V1	1N4739	276-562	LED, clear	Brilliant	276-087
Zener 12V	1N4742	276-563	LED, Red	TLR-107	276-033
Zener 15V	1N4744	276-564	LED, Dual	2-color	276-012
Bridge Rect.	50 PIV	276-1146	IC Socket	8-pin	276-1995
Bridge Rect.	100 PIV	276-1171	IC Socket	14-pin	276-1999
Bridge Rect.	400 PIV	276-1173	IC Socket	16-pin	276-1998
IR Detector	5V	276-137	7-Segment	Red, CC	276-075
IC	555 Timer	276-1723	IC	TLC555	276-1718
IC	556 Dual	276-1728	IC	LM386	276-1731
IC	741 Op-Amp	276-007	IC	1458 Dual	276-038
IC	LM324 Quad	276-1711	IC	TL082 BiFet	276-1715
IC	LM3909	276-1705	IC	4001 4-NOR	276-2401
IC	4013 F-F	276-2413	IC	7400	276-1801
IC	7404	276-1802	IC	7490	276-1808
IC Regulator	LM317T	276-1778	Wire Terminals	PC, two position	276-1388
IC Regulator	LM7805	276-1770	OptoCoupler	MOC3010	276-134
IC Regulator	LM7812	276-1771	Phototransistor	TIL414, IR	276-145
SCR	6A-200V	276-1067	Transistor	MPS2907	276-2023
SCR	6A-400V	276-1020	Transistor	MPS2222A	276-2009
Crystal	Colorburst	272-1310	Transistor	MPS3904	276-2016
Switch, SPST	Push On/Off	275-8079	Transistor	TIP3055	276-2020
Switch, SPST	Momentary	275-8077	Transistor	MJE34	276-2027
Switch, SPST	Push On/Off	275-8051	Transistor	2N3053	276-2030
Switch, SPST	Momentary 'ON'	275-1547	Transistor	2N3055	276-2041
Switch, SPST	Momentary 'OFF'	275-1548	Panel Meter	0 - 15 Vdc	270-1754
Switch, DPDT	Mini toggle	275-663	Micro Electret	Needs 1 - 10V	270-085
Switch, SPST	Submini toggle	275-8068	Multi. PCB	solder vero-board	276-150
Transformer	6.3V/300mA	273-1384	Transformer	12.6V/300mA	273-1385
Transformer CT	12.6V/1.2A	273-1505	Transformer CT	12.6V/3A	273-1511
Transformer CT	18V/2A	273-1515	Transformer CT	25.2V/2A	273-1512
Breadboard	270 pin	276-175	Breadboard	550 pin	276-174

Back to Gadgets Menu **or** Circuits Menu

Calculate Resistor Values from Color Codes

Black | Black | Black | Gold

Tolerance code updated: 2004 Tony van Roon (VA3AVR).

TYPE NUMBER TO MARKING CODE

TYPE NUMBER	MARKING CODE	PACKAGE
2PA1576Q	FtQ	SC-70
2PA1576R	FtR	SC-70
2PA1576S	FtS	SC-70
2PA1774Q	YQ	SC-75
2PA1774R	YR	SC-75
2PA1774S	YS	SC-75
2PB1219AQ	DtQ	SC-70
2PB1219AR	DtR	SC-70
2PB1219AS	DtS	SC-70
2PB709AQ	BQ	SC-59
2PB709AR	BR	SC-59
2PB709AS	BS	SC-59
2PB710AQ	DQ	SC-59
2PB710AR	DR	SC-59
2PB710AS	DS	SC-59
2PC4081Q	ZtQ	SC-70
2PC4081R	ZtR	SC-70
2PC4081S	ZtS	SC-70
2PC4617Q	ZQ	SC-75
2PC4617R	ZR	SC-75
2PC4617S	ZS	SC-75
2PD1820AQ	AtQ	SC-70
2PD1820AR	AtR	SC-70
2PD1820AS	AtS	SC-70
2PD601AQ	ZQ	SC-59
2PD601AR	ZR	SC-59
2PD601AS	ZS	SC-59
2PD602AQ	XQ	SC-59
2PD602AR	XR	SC-59
2PD602AS	XS	SC-59
BC807	5Dp	SOT23
BC807W	5Dt	SOT323
BC807-16	5Ap	SOT23
BC807-16W	5At	SOT323
BC807-25	5Bp	SOT23
BC807-25W	5Bt	SOT323
BC807-40	5Cp	SOT23
BC807-40W	5Ct	SOT323
BC808	5Hp	SOT23

TYPE NUMBER	MARKING CODE	PACKAGE
BC808W	5Ht	SOT323
BC808-16	5Ep	SOT23
BC808-16W	5Et	SOT323
BC808-25	5Fp	SOT23
BC808-25W	5Ft	SOT323
BC808-40	5Gp	SOT23
BC808-40W	5Gt	SOT323
BC817	6Dp	SOT23
BC817W	6Dt	SOT323
BC817-16	6Ap	SOT23
BC817-16W	6At	SOT323
BC817-25	6Bp	SOT23
BC817-25W	6Bt	SOT323
BC817-40	6Cp	SOT23
BC817-40W	6Ct	SOT323
BC818	6Hp	SOT23
BC818W	6Ht	SOT323
BC818-16	6Ep	SOT23
BC818-16W	6Et	SOT323
BC818-25	6Fp	SOT23
BC818-25W	6Ft	SOT323
BC818-40	6Gp	SOT23
BC818-40W	6Gt	SOT323
BC846	1Dp	SOT23
BC846A	1Ap	SOT23
BC846AT	1A	SC-75
BC846AW	1At	SOT323
BC846B	1Bp	SOT23
BC846BT	1B	SC-75
BC846BW	1Bt	SOT323
BC846W	1Dt	SOT323
BC847	1Hp	SOT23
BC847A	1Ep	SOT23
BC847AT	1E	SC-75
BC847AW	1Et	SOT323
BC847B	1Fp	SOT23
BC847BPN	13t	SC-88
BC847BS	1Ft	SC-88
BC847BT	1F	SC-75

TYPE NUMBER	MARKING CODE	PACKAGE
BC847BW	1Ft	SOT323
BC847C	1Gp	SOT23
BC847CT	1G	SC-75
BC847CW	1Gt	SOT323
BC847W	1Ht	SOT323
BC848	1Mp	SOT23
BC848A	1Jp	SOT23
BC848AT	1J	SC-75
BC848AW	1Jt	SOT323
BC848B	1Kp	SOT23
BC848BT	1K	SC-75
BC848BW	1Kt	SOT323
BC848C	1Lp	SOT23
BC848CT	1L	SC-75
BC848CW	1Lt	SOT323
BC848W	1Mt	SOT323
BC849	2Dp	SOT23
BC849B	2Bp	SOT23
BC849BW	2Bt	SOT323
BC849C	2Cp	SOT23
BC849CW	2Ct	SOT323
BC849W	2Dt	SOT323
BC850	2Hp	SOT23
BC850B	2Fp	SOT23
BC850BW	2Ft	SOT323
BC850C	2Gp	SOT23
BC850CW	2Gt	SOT323
BC850W	2Ht	SOT323
BC856	3Dp	SOT23
BC856A	3Ap	SOT23
BC856AT	3A	SC-75
BC856AW	3At	SOT323
BC856B	3Bp	SOT23
BC856BT	3B	SC-75
BC856BW	3Bt	SOT323
BC856W	3Dt	SOT323
BC857	3Hp	SOT23
BC857A	3Ep	SOT23
BC857AT	3E	SC-75
BC857AW	3Et	SOT323

TYPE NUMBER	MARKING CODE	PACKAGE
BC857B	3Fp	SOT23
BC857BS	3Ft	SC-88
BC857BT	3F	SC-75
BC857BW	3Ft	SOT323
BC857C	3Gp	SOT23
BC857CT	3G	SC-75
BC857CW	3Gt	SOT323
BC857W	3Ht	SOT323
BC858	3Mp	SOT23
BC858A	3Jp	SOT23
BC858AT	3J	SC-75
BC858AW	3Jt	SOT323
BC858B	3Kp	SOT23
BC858BT	3K	SC-75
BC858BW	3Kt	SOT323
BC858C	3Lp	SOT23
BC858CT	3L	SC-75
BC858CW	3Lt	SOT323
BC858W	3Mt	SOT323
BC859	4Dp	SOT23
BC859A	4Ap	SOT23
BC859AW	4At	SOT323
BC859B	4Bp	SOT23
BC859BW	4Bt	SOT323
BC859C	4Cp	SOT23
BC859CW	4Ct	SOT323
BC859W	4Dt	SOT323
BC860	4Hp	SOT23
BC860A	4Ep	SOT23
BC860AW	4Et	SOT323
BC860B	4Fp	SOT23
BC860BW	4Ft	SOT323
BC860C	4Gp	SOT23
BC860CW	4Gt	SOT323
BC860W	4Ht	SOT323
BC868	CAC	SOT89
BC868-10	CBC	SOT89
BC868-16	CCC	SOT89
BC868-25	CDC	SOT89
BC869	CEC	SOT89

TYPE NUMBER	MARKING CODE	PACKAGE
BC869-16	CGC	SOT89
BC869-25	CHC	SOT89
BCF29	C7p	SOT23
BCF30	C8p	SOT23
BCF32	D7p	SOT23
BCF33	D8p	SOT23
BCF81	K9p	SOT23
BCP51	BCP51	SOT223
BCP51-10	BCP51/10	SOT223
BCP51-16	BCP51/16	SOT223
BCP52	BCP52	SOT223
BCP52-10	BCP52/10	SOT223
BCP52-16	BCP52/16	SOT223
BCP53	BCP53	SOT223
BCP53-10	BCP53/10	SOT223
BCP53-16	BCP53/16	SOT223
BCP54	BCP54	SOT223
BCP54-10	BCP54/10	SOT223
BCP54-16	BCP54/16	SOT223
BCP55	BCP55	SOT223
BCP55-10	BCP55/10	SOT223
BCP55-16	BCP55/16	SOT223
BCP56	BCP56	SOT223
BCP56-10	BCP56/10	SOT223
BCP56-16	BCP56/16	SOT223
BCP68	BCP68	SOT223
BCP68-10	BCP68/10	SOT223
BCP68-16	BCP68/16	SOT223
BCP68-25	BCP68/25	SOT223
BCP69	BCP69	SOT223
BCP69-10	BCP/10	SOT223
BCP69-16	BCP/16	SOT223
BCP69-25	BCP/25	SOT223
BCV26	FDp	SOT23
BCV27	FFp	SOT23
BCV28	ED	SOT89
BCV29	EF	SOT89
BCV46	FEp	SOT23
BCV47	FGp	SOT23
BCV48	EE	SOT89

TYPE NUMBER	MARKING CODE	PACKAGE
BCV49	EG	SOT89
BCV61	1Mp	SOT143B
BCV61A	1Jp	SOT143B
BCV61B	1Kp	SOT143B
BCV61C	1Lp	SOT143B
BCV62	3Mp	SOT143B
BCV62A	3Jp	SOT143B
BCV62B	3Kp	SOT143B
BCV62C	3Lp	SOT143B
BCV63	D95	SOT143B
BCV63B	D96	SOT143B
BCV64B	C96	SOT143B
BCV65	97p	SOT143B
BCV65B	98p	SOT143B
BCV71	K7p	SOT23
BCV72	K8p	SOT23
BCW29	C1p	SOT23
BCW30	C2p	SOT23
BCW31	D1p	SOT23
BCW32	D2p	SOT23
BCW33	D3p	SOT23
BCW60A	AAp	SOT23
BCW60B	ABp	SOT23
BCW60C	ACp	SOT23
BCW60D	ADp	SOT23
BCW61A	BAp	SOT23
BCW61B	BBp	SOT23
BCW61C	BCp	SOT23
BCW61D	BDp	SOT23
BCW69	H1p	SOT23
BCW70	H2p	SOT23
BCW71	K1p	SOT23
BCW72	K2p	SOT23
BCW81	K3p	SOT23
BCW89	H3p	SOT23
BCX17	T1p	SOT23
BCX18	T2p	SOT23
BCX19	U1p	SOT23
BCX20	U2p	SOT23
BCX51	AA	SOT89

TYPE NUMBER	MARKING CODE	PACKAGE
BCX51-10	AC	SOT89
BCX51-16	AD	SOT89
BCX52	AE	SOT89
BCX52-10	AG	SOT89
BCX52-16	AM	SOT89
BCX53	AH	SOT89
BCX53-10	AK	SOT89
BCX53-16	AL	SOT89
BCX54	BA	SOT89
BCX54-10	BC	SOT89
BCX54-16	BD	SOT89
BCX55	BE	SOT89
BCX55-10	BG	SOT89
BCX55-16	BM	SOT89
BCX56	BH	SOT89
BCX56-10	BK	SOT89
BCX56-16	BL	SOT89
BCX70G	AGp	SOT23
BCX70H	AHp	SOT23
BCX70J	AJp	SOT23
BCX70K	AKp	SOT23
BCX71G	BGp	SOT23
BCX71H	BHp	SOT23
BCX71J	BJp	SOT23
BCX71K	BKp	SOT23
BDL31	BDL31	SOT223
BDL32	BDL32	SOT223
BDP31	BDP31	SOT223
BDP32	BDP32	SOT223
BF550	LAp	SOT23
BF570	B26	SOT23
BF620	DC	SOT89
BF621	DF	SOT89
BF622	DA	SOT89
BF623	DB	SOT89
BF720	BF720	SOT223
BF721	BF721	SOT223
BF722	BF722	SOT223
BF723	BF723	SOT223
BF820	1Vp	SOT23

TYPE NUMBER	MARKING CODE	PACKAGE
BF820W	1Vt	SOT323
BF821	1Wp	SOT23
BF822	1Xp	SOT23
BF822W	1Wt	SOT323
BF823	1Yp	SOT23
BF824	F8p	SOT23
BF824W	F8t	SOT323
BF840	NCp	SOT23
BF841	NDp	SOT23
BFS19	F2p	SOT23
BFS20	G1p	SOT23
BRY61	A5p	SOT23
BRY62	A51	SOT143B
BSP15	BSP15	SOT223
BSP16	BSP16	SOT223
BSP19	BSP19	SOT223
BSP20	BSP20	SOT223
BSP30	BSP30	SOT223
BSP31	BSP31	SOT223
BSP32	BSP32	SOT223
BSP33	BSP33	SOT223
BSP40	BSP40	SOT223
BSP41	BSP41	SOT223
BSP42	BSP42	SOT223
BSP43	BSP43	SOT223
BSP50	BSP50	SOT223
BSP51	BSP51	SOT223
BSP52	BSP52	SOT223
BSP60	BSP60	SOT223
BSP61	BSP61	SOT223
BSP62	BSP62	SOT223
BSR13	U7p	SOT23
BSR14	U8p	SOT23
BSR15	T7p	SOT23
BSR16	T8p	SOT23
BSR17A	U92	SOT23
BSR18A	T92	SOT23
BSR19	U35	SOT23
BSR19A	U36	SOT23
BSR20	T35	SOT23

TYPE NUMBER	MARKING CODE	PACKAGE
BSR20A	T36	SOT23
BSR30	BR1	SOT89
BSR31	BR2	SOT89
BSR32	BR3	SOT89
BSR33	BR4	SOT89
BSR40	AR1	SOT89
BSR41	AR2	SOT89
BSR42	AR3	SOT89
BSR43	AR4	SOT89
BSS63	BMp	SOT23
BSS64	AMp	SOT23
BST15	BT1	SOT89
BST16	BT2	SOT89
BST39	AT1	SOT89
BST40	AT2	SOT89
BST50	AS1	SOT89
BST51	AS2	SOT89
BST52	AS3	SOT89
BST60	BS1	SOT89
BST61	BS2	SOT89
BST62	BS3	SOT89
BSV52	B2p	SOT23
PDTA114EE	03	SC-75
PDTA114EK	03	SC-59
PDTA114ET	p03	SOT23
PDTA114EU	t03	SC-70
PDTA114TE	11	SC-75
PDTA114TK	23	SC-59
PDTA114TT	p11	SOT23
PDTA114TU	t23	SC-70
PDTA124EE	05	SC-75
PDTA124EK	05	SC-59
PDTA124ET	p05	SOT23
PDTA124EU	t05	SC-70
PDTA143EE	01	SC-75
PDTA143EK	01	SC-59
PDTA143ET	p01	SOT23
PDTA143EU	01t	SC-70
PDTA144EE	07	SC-75
PDTA144EK	07	SC-59

TYPE NUMBER	MARKING CODE	PACKAGE
PDTA144ET	p07	SOT23
PDTA144EU	t07	SC-70
PDTB114ET	p09	SOT23
PDTC114EE	09	SC-75
PDTC114EK	04	SC-59
PDTC114ET	p16	SOT23
PDTC114EU	t09	SC-70
PDTC114TE	24	SC-75
PDTC114TK	24	SC-59
PDTC114TT	p12	SOT23
PDTC114TU	t24	SC-70
PDTC124EE	06	SC-75
PDTC124EK	06	SC-59
PDTC124ET	p17	SOT23
PDTC124EU	t06	SC-70
PDTC143EE	02	SC-75
PDTC143EK	02	SC-59
PDTC143ET	p02	SOT23
PDTC143EU	t02	SC-70
PDTC144EE	08	SC-75
PDTC144EK	08	SC-59
PDTC144ET	p08	SOT23
PDTC144EU	t08	SC-70
PDTD114ET	p10	SOT23
PMBS3904	pO4	SOT23
PMBS3906	pO6	SOT23
PMBT2222	p1B	SOT23
PMBT2222A	p1P	SOT23
PMBT2369	p1J	SOT23
PMBT2907	p2B	SOT23
PMBT2907A	p2F	SOT23
PMBT3904	p1A	SOT23
PMBT3906	p2A	SOT23
PMBT4401	p2X	SOT23
PMBT4403	p2T	SOT23
PMBT5088	p1Q	SOT23
PMBT5401	p2L	SOT23
PMBT5550	p1F	SOT23
PMBT5551	pG1	SOT23
PMBT6428	p1K	SOT23

TYPE NUMBER	MARKING CODE	PACKAGE
PMBT6429	p1L	SOT23
PMBTA06	p1G	SOT23
PMBTA13	p1M	SOT23
PMBTA14	p1N	SOT23
PMBTA42	p1D	SOT23
PMBTA43	p1E	SOT23
PMBTA55	p2H	SOT23
PMBTA56	p2G	SOT23
PMBTA63	p2U	SOT23
PMBTA64	p2V	SOT23
PMBTA92	p2D	SOT23
PMBTA93	p2E	SOT23
PMSS3904	t04	SOT323
PMSS3906	t06	SOT323
PMST2222	t1B	SOT323
PMST2222A	t1P	SOT323
PMST2369	t1J	SOT323
PMST2907A	t2F	SOT323
PMST3904	t1A	SOT323
PMST3906	t2A	SOT323
PMST4401	t2X	SOT323
PMST4403	t2T	SOT323
PMST5088	t1Q	SOT323
PMST5089	t1R	SOT323
PMST5401	t2L	SOT323
PMST5550	t1F	SOT323
PMST5551	tG3	SOT323
PMST6428	t1K	SOT323
PMST6429	t1L	SOT323
PMSTA05	t1H	SOT323
PMSTA06	t1G	SOT323
PMSTA42	t1D	SOT323
PMSTA43	t1E	SOT323
PMSTA55	t2H	SOT323
PMSTA56	t2G	SOT323
PMSTA92	t2D	SOT323
PMSTA93	t2E	SOT323
PUMB4	Bt4	SC-88
PUMD2	Dt2	SC-88
PUMD3	Dt3	SC-88

TYPE NUMBER	MARKING CODE	PACKAGE
PUMH11	Ht1	SC-88
PUMT1	FtF	SC-88
PUMX1	ZtZ	SC-88
PUMZ1	FtZ	SC-88
PXT2222A	p1P	SOT89
PXT2907A	p2F	SOT89
PXT3904	p1A	SOT89
PXT3906	p2A	SOT89
PXT4401	p2X	SOT89
PXT4403	p2T	SOT89
PXTA14	p1N	SOT89
PXTA27	A27	SOT89
PXTA42	p1D	SOT89
PXTA43	p1E	SOT89
PXTA64	p2V	SOT89
PXTA92	p2D	SOT89
PXTA93	p2E	SOT89
PZT2222A	ZT2222A	SOT223
PZT2907A	ZT2907A	SOT223
PZT3904	ZT3904	SOT223
PZT3906	ZT3906	SOT223
PZTA06	PZTA06	SOT223
PZTA14	PZTA14	SOT223
PZTA42	ZTA42	SOT223
PZTA43	ZTA43	SOT223
PZTA44	PZTA44	SOT223
PZTA45	PZTA45	SOT223
PZTA56	PZTA56	SOT223
PZTA64	PZTA64	SOT223
PZTA92	PZTA92	SOT223

MARKING CODE TO TYPE NUMBER

MARKING CODE	TYPE NUMBER	PACKAGE
01	PDTA143EE	SC-75
01	PDTA143EK	SC-59
01t	PDTA143EU	SC-70
02	PDTC143EE	SC-75
02	PDTC143EK	SC-59
03	PDTA114EE	SC-75
03	PDTA114EK	SC-59
04	PDTC114EK	SC-59
05	PDTA124EE	SC-75
05	PDTA124EK	SC-59
06	PDTC124EE	SC-75
06	PDTC124EK	SC-59
07	PDTA144EE	SC-75
07	PDTA144EK	SC-59
08	PDTC144EE	SC-75
08	PDTC144EK	SC-59
09	PDTC114EE	SC-75
11	PDTA114TE	SC-75
13t	BC847BPN	SC-88
1A	BC846AT	SC-75
1Ap	BC846A	SOT23
1At	BC846AW	SOT323
1B	BC846BT	SC-75
1Bp	BC846B	SOT23
1Bt	BC846BW	SOT323
1Dp	BC846	SOT23
1Dt	BC846W	SOT323
1E	BC847AT	SC-75
1Ep	BC847A	SOT23
1Et	BC847AW	SOT323
1F	BC847BT	SC-75
1Fp	BC847B	SOT23
1Ft	BC847BS	SC-88
1Ft	BC847BW	SOT323
1G	BC847CT	SC-75
1Gp	BC847C	SOT23
1Gt	BC847CW	SOT323
1Hp	BC847	SOT23
1Ht	BC847W	SOT323

MARKING CODE	TYPE NUMBER	PACKAGE
1J	BC848AT	SC-75
1Jp	BC848A	SOT23
1Jp	BCV61A	SOT143B
1Jt	BC848AW	SOT323
1K	BC848BT	SC-75
1Kp	BC848B	SOT23
1Kp	BCV61B	SOT143B
1Kt	BC848BW	SOT323
1L	BC848CT	SC-75
1Lp	BC848C	SOT23
1Lp	BCV61C	SOT143B
1Lt	BC848CW	SOT323
1Mp	BC848	SOT23
1Mp	BCV61	SOT143B
1Mt	BC848W	SOT323
1Vp	BF820	SOT23
1Vt	BF820W	SOT323
1Wp	BF821	SOT23
1Wt	BF822W	SOT323
1Xp	BF822	SOT23
1Yp	BF823	SOT23
23	PDTA114TK	SC-59
24	PDTC114TE	SC-75
24	PDTC114TK	SC-59
2Bp	BC849B	SOT23
2Bt	BC849BW	SOT323
2Cp	BC849C	SOT23
2Ct	BC849CW	SOT323
2Dp	BC849	SOT23
2Dt	BC849W	SOT323
2Fp	BC850B	SOT23
2Ft	BC850BW	SOT323
2Gp	BC850C	SOT23
2Gt	BC850CW	SOT323
2Hp	BC850	SOT23
2Ht	BC850W	SOT323
3A	BC856AT	SC-75
3Ap	BC856A	SOT23
3At	BC856AW	SOT323

MARKING CODE	TYPE NUMBER	PACKAGE
3B	BC856BT	SC-75
3Bp	BC856B	SOT23
3Bt	BC856BW	SOT323
3Dp	BC856	SOT23
3Dt	BC856W	SOT323
3E	BC857AT	SC-75
3Ep	BC857A	SOT23
3Et	BC857AW	SOT323
3F	BC857BT	SC-75
3Fp	BC857B	SOT23
3Ft	BC857BS	SC-88
3Ft	BC857BW	SOT323
3G	BC857CT	SC-75
3Gp	BC857C	SOT23
3Gt	BC857CW	SOT323
3Hp	BC857	SOT23
3Ht	BC857W	SOT323
3J	BC858AT	SC-75
3Jp	BC858A	SOT23
3Jp	BCV62A	SOT143B
3Jt	BC858AW	SOT323
3K	BC858BT	SC-75
3Kp	BC858B	SOT23
3Kp	BCV62B	SOT143B
3Kt	BC858BW	SOT323
3L	BC858CT	SC-75
3Lp	BC858C	SOT23
3Lp	BCV62C	SOT143B
3Lt	BC858CW	SOT323
3Mp	BC858	SOT23
3Mp	BCV62	SOT143B
3Mt	BC858W	SOT323
4Ap	BC859A	SOT23
4At	BC859AW	SOT323
4Bp	BC859B	SOT23
4Bt	BC859BW	SOT323
4Cp	BC859C	SOT23
4Ct	BC859CW	SOT323
4Dp	BC859	SOT23
4Dt	BC859W	SOT323

MARKING CODE	TYPE NUMBER	PACKAGE
4Ep	BC860A	SOT23
4Et	BC860AW	SOT323
4Fp	BC860B	SOT23
4Ft	BC860BW	SOT323
4Gp	BC860C	SOT23
4Gt	BC860CW	SOT323
4Hp	BC860	SOT23
4Ht	BC860W	SOT323
5Ap	BC807-16	SOT23
5At	BC807-16W	SOT323
5Bp	BC807-25	SOT23
5Bt	BC807-25W	SOT323
5Cp	BC807-40	SOT23
5Ct	BC807-40W	SOT323
5Dp	BC807	SOT23
5Dt	BC807W	SOT323
5Ep	BC808-16	SOT23
5Et	BC808-16W	SOT323
5Fp	BC808-25	SOT23
5Ft	BC808-25W	SOT323
5Gp	BC808-40	SOT23
5Gt	BC808-40W	SOT323
5Hp	BC808	SOT23
5Ht	BC808W	SOT323
6Ap	BC817-16	SOT23
6At	BC817-16W	SOT323
6Bp	BC817-25	SOT23
6Bt	BC817-25W	SOT323
6Cp	BC817-40	SOT23
6Ct	BC817-40W	SOT323
6Dp	BC817	SOT23
6Dt	BC817W	SOT323
6Ep	BC818-16	SOT23
6Et	BC818-16W	SOT323
6Fp	BC818-25	SOT23
6Ft	BC818-25W	SOT323
6Gp	BC818-40	SOT23
6Gt	BC818-40W	SOT323
6Hp	BC818	SOT23
6Ht	BC818W	SOT323

MARKING CODE	TYPE NUMBER	PACKAGE
97p	BCV65	SOT143B
98p	BCV65B	SOT143B
A27	PXTA27	SOT89
A51	BRY62	SOT143B
A5p	BRY61	SOT23
AA	BCX51	SOT89
AAp	BCW60A	SOT23
ABp	BCW60B	SOT23
AC	BCX51-10	SOT89
ACp	BCW60C	SOT23
AD	BCX51-16	SOT89
ADp	BCW60D	SOT23
AE	BCX52	SOT89
AG	BCX52-10	SOT89
AGp	BCX70G	SOT23
AH	BCX53	SOT89
AHp	BCX70H	SOT23
AJp	BCX70J	SOT23
AK	BCX53-10	SOT89
AKp	BCX70K	SOT23
AL	BCX53-16	SOT89
AM	BCX52-16	SOT89
AMp	BSS64	SOT23
AR1	BSR40	SOT89
AR2	BSR41	SOT89
AR3	BSR42	SOT89
AR4	BSR43	SOT89
AS1	BST50	SOT89
AS2	BST51	SOT89
AS3	BST52	SOT89
AT1	BST39	SOT89
AT2	BST40	SOT89
AtQ	2PD1820AQ	SC-70
AtR	2PD1820AR	SC-70
AtS	2PD1820AS	SC-70
B26	BF570	SOT23
B2p	BSV52	SOT23
BA	BCX54	SOT89
BAp	BCW61A	SOT23
BBp	BCW61B	SOT23

MARKING CODE	TYPE NUMBER	PACKAGE
BC	BCX54-10	SOT89
BCP51	BCP51	SOT223
BCP51/10	BCP51-10	SOT223
BCP51/16	BCP51-16	SOT223
BCP52	BCP52	SOT223
BCP52/10	BCP52-10	SOT223
BCP52/16	BCP52-16	SOT223
BCP53	BCP53	SOT223
BCP53/10	BCP53-10	SOT223
BCP53/16	BCP53-16	SOT223
BCP54	BCP54	SOT223
BCP54/10	BCP54-10	SOT223
BCP54/16	BCP54-16	SOT223
BCP55	BCP55	SOT223
BCP55/10	BCP55-10	SOT223
BCP55/16	BCP55-16	SOT223
BCP56	BCP56	SOT223
BCP56/10	BCP56-10	SOT223
BCP56/16	BCP56-16	SOT223
BCP68	BCP68	SOT223
BCP68/10	BCP68-10	SOT223
BCP68/16	BCP68-16	SOT223
BCP68/25	BCP68-25	SOT223
BCP69	BCP69	SOT223
BCP/10	BCP69-10	SOT223
BCP/16	BCP69-16	SOT223
BCP/25	BCP69-25	SOT223
BCp	BCW61C	SOT23
BD	BCX54-16	SOT89
BDL31	BDL31	SOT223
BDL32	BDL32	SOT223
BDP31	BDP31	SOT223
BDP32	BDP32	SOT223
BDp	BCW61D	SOT23
BE	BCX55	SOT89
BF720	BF720	SOT223
BF721	BF721	SOT223
BF722	BF722	SOT223
BF723	BF723	SOT223
BG	BCX55-10	SOT89

MARKING CODE	TYPE NUMBER	PACKAGE
BGp	BCX71G	SOT23
BH	BCX56	SOT89
BHp	BCX71H	SOT23
BJp	BCX71J	SOT23
BK	BCX56-10	SOT89
BKp	BCX71K	SOT23
BL	BCX56-16	SOT89
BM	BCX55-16	SOT89
BMp	BSS63	SOT23
BQ	2PB709AQ	SC-59
BR	2PB709AR	SC-59
BR1	BSR30	SOT89
BR2	BSR31	SOT89
BR3	BSR32	SOT89
BR4	BSR33	SOT89
BS	2PB709AS	SC-59
BS1	BST60	SOT89
BS2	BST61	SOT89
BS3	BST62	SOT89
BSP15	BSP15	SOT223
BSP16	BSP16	SOT223
BSP19	BSP19	SOT223
BSP20	BSP20	SOT223
BSP30	BSP30	SOT223
BSP31	BSP31	SOT223
BSP32	BSP32	SOT223
BSP33	BSP33	SOT223
BSP40	BSP40	SOT223
BSP41	BSP41	SOT223
BSP42	BSP42	SOT223
BSP43	BSP43	SOT223
BSP50	BSP50	SOT223
BSP51	BSP51	SOT223
BSP52	BSP52	SOT223
BSP60	BSP60	SOT223
BSP61	BSP61	SOT223
BSP62	BSP62	SOT223
BT1	BST15	SOT89
BT2	BST16	SOT89
Bt4	PUMB4	SC-88

MARKING CODE	TYPE NUMBER	PACKAGE
C1p	BCW29	SOT23
C2p	BCW30	SOT23
C7p	BCF29	SOT23
C8p	BCF30	SOT23
C96	BCV64B	SOT143B
CAC	BC868	SOT89
CBC	BC868-10	SOT89
CCC	BC868-16	SOT89
CDC	BC868-25	SOT89
CEC	BC869	SOT89
CGC	BC869-16	SOT89
CHC	BC869-25	SOT89
D1p	BCW31	SOT23
D2p	BCW32	SOT23
D3p	BCW33	SOT23
D7p	BCF32	SOT23
D8p	BCF33	SOT23
D95	BCV63	SOT143B
D96	BCV63B	SOT143B
DA	BF622	SOT89
DB	BF623	SOT89
DC	BF620	SOT89
DF	BF621	SOT89
DQ	2PB710AQ	SC-59
DR	2PB710AR	SC-59
DS	2PB710AS	SC-59
Dt2	PUMD2	SC-88
Dt3	PUMD3	SC-88
DtQ	2PB1219AQ	SC-70
DtR	2PB1219AR	SC-70
DtS	2PB1219AS	SC-70
ED	BCV28	SOT89
EE	BCV48	SOT89
EF	BCV29	SOT89
EG	BCV49	SOT89
F2p	BFS19	SOT23
F8p	BF824	SOT23
F8t	BF824W	SOT323
FDp	BCV26	SOT23
FEp	BCV46	SOT23

MARKING CODE	TYPE NUMBER	PACKAGE
FFp	BCV27	SOT23
FGp	BCV47	SOT23
FtF	PUMT1	SC-88
FtQ	2PA1576Q	SC-70
FtR	2PA1576R	SC-70
FtS	2PA1576S	SC-70
FtZ	PUMZ1	SC-88
G1p	BFS20	SOT23
H1p	BCW69	SOT23
H2p	BCW70	SOT23
H3p	BCW89	SOT23
Ht1	PUMH11	SC-88
K1p	BCW71	SOT23
K2p	BCW72	SOT23
K3p	BCW81	SOT23
K7p	BCV71	SOT23
K8p	BCV72	SOT23
K9p	BCF81	SOT23
LAp	BF550	SOT23
NCp	BF840	SOT23
NDp	BF841	SOT23
PZTA06	PZTA06	SOT223
PZTA14	PZTA14	SOT223
PZTA44	PZTA44	SOT223
PZTA45	PZTA45	SOT223
PZTA56	PZTA56	SOT223
PZTA64	PZTA64	SOT223
PZTA92	PZTA92	SOT223
T1p	BCX17	SOT23
T2p	BCX18	SOT23
T35	BSR20	SOT23
T36	BSR20A	SOT23
T7p	BSR15	SOT23
T8p	BSR16	SOT23
T92	BSR18A	SOT23
U1p	BCX19	SOT23
U2p	BCX20	SOT23
U35	BSR19	SOT23
U36	BSR19A	SOT23
U7p	BSR13	SOT23
U8p	BSR14	SOT23
U92	BSR17A	SOT23
XQ	2PD602AQ	SC-59
XR	2PD602AR	SC-59
XS	2PD602AS	SC-59
YQ	2PA1774Q	SC-75
YR	2PA1774R	SC-75
YS	2PA1774S	SC-75
ZQ	2PC4617Q	SC-75
ZQ	2PD601AQ	SC-59
ZR	2PC4617R	SC-75
ZR	2PD601AR	SC-59
ZS	2PC4617S	SC-75
ZS	2PD601AS	SC-59
ZT2222A	PZT2222A	SOT223
ZT2907A	PZT2907A	SOT223
ZT3904	PZT3904	SOT223
ZT3906	PZT3906	SOT223
ZTA42	PZTA42	SOT223
ZTA43	PZTA43	SOT223
ZtQ	2PC4081Q	SC-70
ZtR	2PC4081R	SC-70
ZtS	2PC4081S	SC-70
ZtZ	PUMX1	SC-88
p01	PDTA143ET	SOT23
p02	PDTC143ET	SOT23
p03	PDTA114ET	SOT23
p05	PDTA124ET	SOT23
p07	PDTA144ET	SOT23
p08	PDTC144ET	SOT23
p09	PDTB114ET	SOT23
p10	PDTD114ET	SOT23
p11	PDTA114TT	SOT23
p12	PDTC114TT	SOT23
p16	PDTC114ET	SOT23
p17	PDTC124ET	SOT23
p1A	PMBT3904	SOT23
p1A	PXT3904	SOT89
p1B	PMBT2222	SOT23
p1D	PMBTA42	SOT23

MARKING CODE	TYPE NUMBER	PACKAGE
p1D	PXTA42	SOT89
p1E	PMBTA43	SOT23
p1E	PXTA43	SOT89
p1F	PMBT5550	SOT23
p1G	PMBTA06	SOT23
p1J	PMBT2369	SOT23
p1K	PMBT6428	SOT23
p1L	PMBT6429	SOT23
p1M	PMBTA13	SOT23
p1N	PMBTA14	SOT23
p1N	PXTA14	SOT89
p1P	PMBT2222A	SOT23
p1P	PXT2222A	SOT89
p1Q	PMBT5088	SOT23
p2A	PMBT3906	SOT23
p2A	PXT3906	SOT89
p2B	PMBT2907	SOT23
p2D	PMBTA92	SOT23
p2D	PXTA92	SOT89
p2E	PMBTA93	SOT23
p2E	PXTA93	SOT89
p2F	PMBT2907A	SOT23
p2F	PXT2907A	SOT89
p2G	PMBTA56	SOT23
p2H	PMBTA55	SOT23
p2L	PMBT5401	SOT23
p2T	PMBT4403	SOT23
p2T	PXT4403	SOT89
p2U	PMBTA63	SOT23
p2V	PMBTA64	SOT23
p2V	PXTA64	SOT89
p2X	PMBT4401	SOT23
p2X	PXT4401	SOT89
pG1	PMBT5551	SOT23
pO4	PMBS3904	SOT23
pO6	PMBS3906	SOT23
t02	PDTC143EU	SC-70
t03	PDTA114EU	SC-70
t04	PMSS3904	SC-70
t05	PDTA124EU	SC-70

MARKING CODE	TYPE NUMBER	PACKAGE
t06	PDTC124EU	SC-70
t06	PMSS3906	SC-70
t07	PDTA144EU	SC-70
t08	PDTC144EU	SC-70
t09	PDTC114EU	SC-70
t1A	PMST3904	SOT323
t1B	PMST2222	SOT323
t1D	PMSTA42	SOT323
t1E	PMSTA43	SOT323
t1F	PMST5550	SOT323
t1G	PMSTA06	SOT323
t1H	PMSTA05	SOT323
t1J	PMST2369	SOT323
t1K	PMST6428	SOT323
t1L	PMST6429	SOT323
t1P	PMST2222A	SOT323
t1Q	PMST5088	SOT323
t1R	PMST5089	SOT323
t23	PDTA114TU	SC-70
t24	PDTC114TU	SC-70
t2A	PMST3906	SOT323
t2D	PMSTA92	SOT323
t2E	PMSTA93	SOT323
t2F	PMST2907A	SOT323
t2G	PMSTA56	SOT323
t2H	PMSTA55	SOT323
t2L	PMST5401	SOT323
t2T	PMST4403	SOT323
t2X	PMST4401	SOT323
tG3	PMST5551	SOT323

PN100 - PN200

Data sheet

General Purpose Substitutes for Medium Power Transistors

by Tony van Roon, VA3AVR

PN100 (NPN)			PN200 (PNP)		
PN2221	2N2219A	2N4123	PN2907	PN4250	2N4126
PN2222	2N2222A	2N4124	PN2907A	PN4355	2N4291
PN2222A	2N3414	2N4401	PN3638	PN4916	2N4402
PN3565	2N3415	2N5088	PN3638A	PN4917	2N4403
PN3568	2N3416	2N5510	PN3640	PN5910	2N5086
PN3569	2N3417	ECG123AP	PN3644	2N2905A	2N5087
PN3643	2N3700	NTE123AP	PN4121	2N3467	2N5447
PN3646	2N3704		PN4143	2N3702	ECG159
PN5133	2N3904		PN4248	2N3906	NTE159
			PN4249	2N4125	

Type	BVceo (V)	Ic mA	hFE min	Ft MHz	Pd mW	I will add more types when they become available. (C) Tony van Roon
PN100	45	500	100	250	625	
PN200	45	1000	100	250	625	

The National Semiconductor TO-92 plastic cased PN100 (NPN), and the PN200 (PNP) are general purpose medium power transistors, and designed as general replacements devices. I have used these two type for the past many years and never had problems with them. They seem to work and do as advertised. Not only that, they are cheap and available in bulk (quantities of 1 - 999 @ $0.08, 1000 - 5000 @ $0.07, and 5000 and up @ $0.05).

The above table is for using the PN100/PN200 as a ***replacement*** or substitute transistor, but not the other way around.

I have found the PN100/PN200 transistors good replacements for most applications and included the electrical data for your convenience.

Back to Gadgets or Circuits page

LF13741N, Monolithic JFET Input Operational Amplifier Data sheet

No Known Direct Replacements

by Tony van Roon

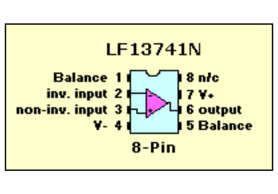

The LF13741N is a 741 with Bi-Fet input followers on the same die. Familiar operating characteristics--those of a 741--with the added advantage of low input bias current make the LF13741 ease to use. Monolithic fabrication makes this "drop-in-replacement" operational amplifier very economical.

Applications in which the LF13741 excels are those which require low bias current, moderate speed and low cost. A few examples include high impedance transducer amplifiers, photocell amplifiers, buffers for high impedance, slow to moderate speed sources and buffers in sample-and-hold type systems where leakage from the hold capacitor node must be kept to a minimum.

Systems designers can take full advantage of their knowledge of the 741 when designing with the LF13741 to achieve extremely rapid "design times." The LF13741 can also be used in existing sockets to make the "error budget" for input bias and/or offset currents negligible and in many cases eliminate trimming. For higher speed and lower noise use the LF155, LF156, LF157 series of Bi-Fet operational amplifiers.

Features:
- Low input bias current (50pA)
- Input common-mode range to positive supply voltage
- Low input noise current (0.01pA/rootHz)
- High input impedance ($5x10^{11}$ ohm)
- Familiar 741 operating characteristics

Advantages:
- FET inputs--741 operating characteristics
- Low cost
- Easy to use
- Standard Supplies
- Standard pin-outs
- Non-rectifying input for RF environment
- Rapid "design time"

Applications:
- Smoke detectors
- Ito V converters
- Hight impedance buffers
- Low drift sample and hold circuits
- Long time timers
- Low drift peak detectors
- Supply current monitors
- Low error budget systems

Absolute Maximum Ratings:
- Supply voltage +18 volt dc.
- Differential Input Voltage +30V dc.
- $T_{j(MAX)}$ 100°C.
- Storage temperature range from -65 to +150 °C.
- Lead temperature (soldering, up to 4 sec) 260 °C.

Notes:
- No special (static) handling precautions
- Applying reverse power will destroy this device.
- Unlike the regular 741, with the LF13741 you can take both inputs above the positive supply voltage by more than 0.1V before the amplifier ceases to function. This feature enables you to use the LF13741 to monitor and/or limit the current from the same supply used to power it. If you exceed the positive common-mode voltage limit on only one input, the output phase will remain correct. When you exceed the limit on both inputs, the output phase is unpredictable.

Back to Gadgets Menu page

The Guelph Amateur Radio Club's *official* Home Page

The Guelph Amateur Radio Club meets at 7:30pm on the third Monday of the month. The club meetings are held at Zehrs, at the corner of Paisley and Imperial. Watch for other events in the area.

The next meeting is **7:30pm 17 January, 2005** at the meeting room at Zehrs on the corner of Paisley and Imperial.

We operated a Special Event Station at McCrae House Museum November 4-11. Check out the Museum online at Guelph Civic Museum.

On "most" Saturday mornings, there is an informal coffee break at Clubhouse Donuts at the corner of Victoria and Speedvale in Guelph. Again, everyone is welcome!

Local Repeaters

- VE3ZMG 145.210- (open auto-patch) Guelph
- VE3GEG 147.000+ (131.8Hz Tone in and out) Guelph
- VE3RKL 443.850+ Guelph
- VE3OVQ 147.540 (131.8hz tone on input) Guelph IRLP Node
- VE3RSS 147.030- (open auto-patch) Acton
- VE3RCK 146.865- Kitchener
- VE3KSR 146.970- Kitchener
- VE3KFM 442.000+ Kitchener
- VE3RBM 444.875+ Kitchener
- VE3BHR 447.075- Kitchener
- VE3WWW 146.835- Waterloo
- VE3WFM 147.090+ Waterloo
- VA3SED 53.370- Baden
- VE3WIK 53.110- Carlisle

Packet Frequencies

- VA3SED FBB BBS in Baden
- VE3UOW TCP/IP BBS with links to the internet
- VE3KSR 145.010 AX.25 in Baden
- VE3KWQ 145.090 AX.25 in Kitchener
- VA3OAT-1 145.050 AX.25 Packet Mailbox in Elora

For more information on *Amateur Radio in the Guelph Area*, send mail to VE3MKY (remove the 99. You know all about cutting down on spam?) Mike, or

HamGuide A Beginner's Guide to Amateur Radio Getting started in Amateur Radio? Check this out.

Radio Amateurs of Canada Home Page to get lots more info on Amateur Radio.
or
Bob Cooke the RAC Ontario South Regional Director's Web Page
or

HamRad's Web Page which lists lot's of clubs, companies, etc...
or, try
QSL DX Web Page which gives excellent info on real-time propagation.
or
SuperWinlog Homepage an excellent FREEWARE windows logging program.
or
Industry Canada's Web Page
or
Paul VA3HST's APRS Web Page

Search the Web with Google"

Google Search

or...Search the Web with Starting Point:

Starting Point **MetaSearch**

Search for: Find

QRZ.COM
Call:
Submit Query

Check the weather that is coming our way

Thanks to WEB counter for keeping track of visitors. 16753

Guelph Amateur Radio Club
PO Box 1305
Guelph ON
N1H 6H9

The official GARC Home Page / Sunday 2 January, 2005

Jonathan's Electronics
Your Online Electronics Help Forum

Log in to check your private messages
The time now is Sun Jan 02, 2005 2:40 pm
Jonathan's Electronics Forum Index — View unanswered posts

Forum	Topics	Posts	Last Post
From the Forum Administrator			
General Forum Info. & Announcements General Forum info such as server problems, forum problems, and other.	3	4	Sun Nov 21, 2004 1:59 pm Admin
Forum & Chat Rules Everyone MUST read!	2	2	Fri Oct 01, 2004 11:06 pm Admin
Jokes This is a good place to put up some of those really funny jokes. Please, share with us!!! Moderators Opa, Nang	2	7	Sat Sep 11, 2004 12:01 pm Plaka
Circuits			
Looking for a circuit? Need help with a circuit? If you are looking for a particular circuit or just need help troubleshooting a circuit, post your questions here. Moderators Opa, Nang	25	53	Sat Jan 01, 2005 4:24 am sharanya
Handy Tips, Tricks, Tutorials, or Resources Do you have a handy tip, trick, tutorial, or resource for electronics hobbyist to share? Post them here. Find helpful information or just refresh your memory here. Moderators Opa, Nang	1	1	Tue Dec 07, 2004 11:57 pm Admin
Project Ideas for School			
Electronics Projests Ideas Looking for a project idea for your Senior project design? Moderators Opa, Nang	0	0	No Posts
Components/Software			
Looking for Components, Software, or Instruments Looking for a certain Component, Circuit Simulation Software (SPICE), or Instruments? Post your questions here. Moderators Opa, Nang	14	49	Tue Dec 07, 2004 8:23 pm Nang
Datasheets If you are looking for a datasheet post your questions here. Moderators Opa, Nang	1	1	Sun Jun 20, 2004 7:13 pm Admin

Mark all forums read — All times are GMT - 4 Hours

Who is Online

Our users have posted a total of **117** articles
We have **101** registered users
The newest registered user is **njnear**

In total there are **3** users online :: 0 Registered, 0 Hidden and 3 Guests [Administrator] [Moderator]
Most users ever online was **13** on Fri Aug 13, 2004 3:53 am
Registered Users: None

[**phpBBChatSpot v1.0.0**]
There are **0** users in chat right now. [Please login to the forum to use chat]

This data is based on users active over the past five minutes

Log in

Username: Password: Log me on automatically each visit [Log in]

New posts | No new posts | Forum is locked

Futaba to JR Cord

http://www.uoguelph.ca/~antoon

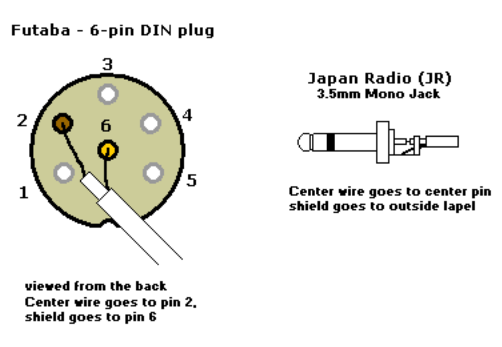

The JR buddy box cable is a thin coaxial type. The center pin goes from the center pin of the JR plug to pin 2 of the Futaba 6-pin DIN plug. The shield (DSC) goes from the Futaba pin 6 to the lapel connector of the JR plug. Easy as pie! Cable length should in general not exceed 15 feet.

Back to R/C Gadgets Page

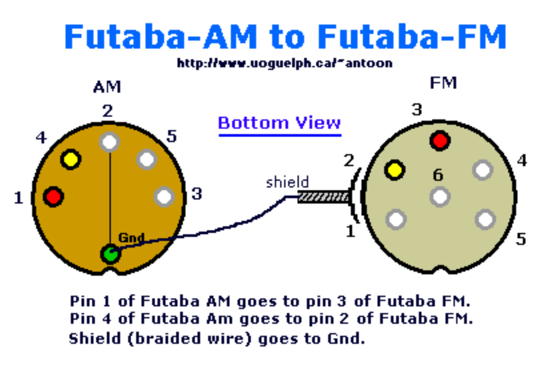

Cable length should in general not exceed 15 feet.

Back to R/C Gadgets Page

Tony's FlyWire for Helicopter

by Tony van Roon

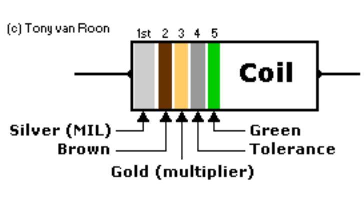

Description

o Value of the coil is 1.5 μH (micro-Henry), 5 to 10 % tolerance. Add about 1/4" length for soldering.
o Part number for coil (silver-brown-gold-green-silver) is Miller #9238-24 (ElectroSonic).
o Measure 4" from the receiver, cut the antenna wire(keep the wire!)
o Solder or crimp on the supplied gold-plated connector socket.
o Heatshrink the piece of sleeving over the connector socket.
o Before flying, do adequate range testing the usual way at the flying field, as far as possible until you loose signal, and then compare that when you had no FlyWire installed.

At the time (1992) I was unwilling to pay the high price for a *Dean's Antenna*. I believe it was twenty bucks or something, money I very well good use for ca-glue. I just thought the price was too much for a simple design like that so I decided to put my own calculator to work and the result is excellent. It works good with my own heli's and safely assume the same for boats and cars. I have not tried it for airplanes but myself, I don't trust the FlyWire, Dean's Antenna or ***ANYTHING ELSE*** but the original receiver antenna in any ***airplane!***

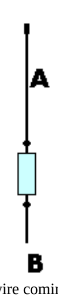

Part 'A' is 6 inches pianowire. Part 'B' is the 4-inches of wire coming from the receiver.

This unit tested *ONLY* with Helicopter!!!

Back to Gadgets Menu page

Glowplug Driver for R/C

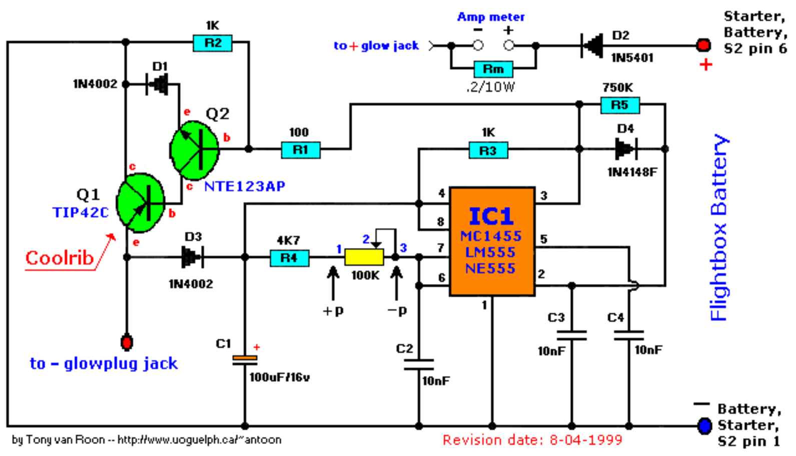

by Tony van Roon -- http://www.uoguelph.ca/~antoon

Revision date: 8-04-1999

All errors in circuit diagrams, documents and layout are corrected. The circuit as shown below is functional and working. Note that Q2 is sensitive and easily destroyed by wrong connection, shorts, over-voltage or too much current. What does that mean? If your circuit does not work immediately and draws excessive amounts of current when you first try it you can easily assume that Q2 and possibly T1 will be defective. I included a small list with possible replacements for the major components. I tried a couple of them and seemed to work satisfactory. **An email from Mo in England indicates a logarithmic potentiometer is used to better control the current. It certainly does not harm to try that and use whatever works for you.**

Parts List:

**All resistors, except Rm, (metal-film recommended) 1/8 watt (1/4 watt for carbon)
& no less than 5% tolerance, unless otherwise posted.**

C1 = 100uF/16V Electrolytic
C2 = 10nF, ceramic
C3,C4 = 10nF, mica
Q1 = TIP42C
Q2 = NTE123AP
D2 = 1N5401
D1,D3 = 1N4002
D4 = 1N4148F
IC1 = LM555

R1 = 100 Ohm, 1/2 watt
R2 = 1K
R3 = 1K
R4 = 4K7
R5 = 750K
Rm = .2 ohm/10W
P1 = 100K
Here is a suggestion for a complete Power Panel

1 red jack
1 black jack
1 ampmeter, 1 to 6-amp (dc)
1 knob for potentiometer
1 coolrib for Q1

A couple possible substitutes, use at your disgression, no guarantees:
For Q1: TIP32C, TIP42, TIP42A (or B), NTE332, ECG332.
For Q2: 2N3904, BC547, (or A or B), BC550, European TUN.
For D1,3: NTE116, ECG116, try others.
For D2: NTE5801, try others.
For D4: NTE519, ECG519, other 1N4148x types worked also.
For IC1: NE555, TLC555, MC1455, HC555, NTE955M, ECG955, etc.
The NTE123A did not seem to work and is not quite the same as the 'AP' type.
The 2N2222(A) did not work in the prototype and shorted out the circuit.

The ECG and NTE/ECG substitutes are made by Sylvania. I build two units and both working fine.

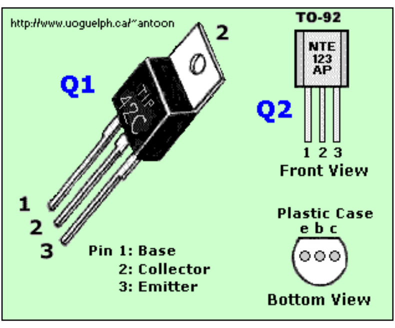

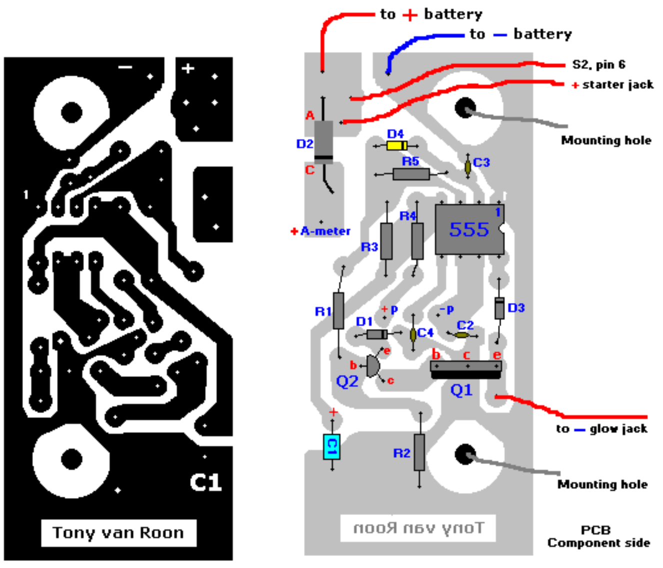

[Click here] to print an original size pcb (3 x 6cm).

Notes:

An on/off switch is not required for the glowplug driver since it only draws current when a glowplug is attached. As a matter of fact, the circuit is only powered (via Q1) via a connected glowplug. Just in case jou were wondering how the positive (+) side of the circuit is connected. The starter motor runs directly from the flight box battery, via the jacks on the power-panel, and has it's own on/off switch. Same scenario for the fuel pump, but includes a reverse switch to pump the fuel in or out the tank/cannister.

For all components, substitutes are fine. D1 and D3 are regular 1N4002 diodes. You may substitute with the 1N4001, or 1N4003. D4 (1N4148F) is an ultra-fast switching silicon diode with a 100V prv. The regular and more familiar 1N4148 seems to work also.
D2 (1N5401) is a 3A/100V prv power diode.

Q1 is a PNP power transistor/switch with a TO-220 case, 6A, 80/100V, 65 watts. Don't be afraid to experiment, and don't forget the coolrib on the TIP42, it may be needed. I strongly recommend a powersupply if you're gonna experiment and turn up the voltage slowly while watching the ampmeter. My own experiments resulted in 3 burned out glowplugs, 2 TIPs, and 2 NTE123AP. Q2 is a NPN silicon, AF/RF Amp/Driver, transistor to drive Q1. If you substitute, stick with the 'driver' type, other may burn-out the very second you apply power. Again, try using whatever you have in your parts-box first, but try to match the current/voltage parameters as close as you can and make sure it is able to drive Q1. Whatever transistor you use for Q1 or Q2, watch the orientation of the the emitter, base and collector and don't assume it is the same as the original or as shown in the component layout. The tab for the metal case transistors (Q2) is *always* the emitter. Remember, Q2, as mentioned before, should be a driver-type-transistor (or close to it) in order for it to supply enough current to Q1.

All this circuit does, is providing enough controlled current (via P1) to make/keep a plug glowing under various conditions.
In regards to the 750K value of R5, it is fine to combine different resistors to get to that value. I used two 1M5 resistors in parallel myself. Works fine! So does 680K+6M8 (754K).

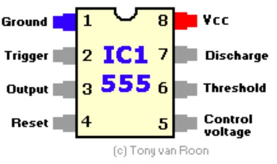

The CMOS timer, MC1455P, can be substituted for the ordinary LM or NE555 and are pin-for-pin compatible. The CMOS version uses much less power and its operating voltage is 2 - 18 volt versus the regular 555 type 4.5 - 18volt. The amp meter is not mandatory, but gives you a nice visual indicator.

When a glowplug is hooked up (the plug act as an on/off switch to power the circuit), Q2 switches on and biases Q1, which in turn provides enough current, adjusted with potentiometer P1, to make the plug glow. C2, C3, & C4 are filtering capacitors while C1 keeps the voltage over the glowplug steady, like when the plug gets wet with fuel and draws more current. Diodes D1/D3 are feedback blocking diodes preventing signal feedback.

CAUTION! The '-' of the glow plug jack connects to the emitter of Q1 only!

If you wish to incorporate the above into a complete Power Panel check here for a possible suggestion on how to do that.

Back to Gadgets Menu page

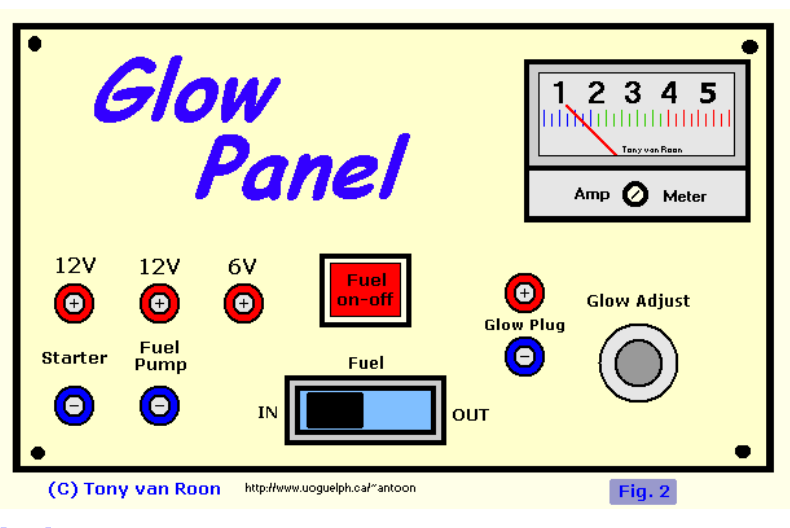

Fig. 2

Parts List:

1 large on-on slide switch, double pole
4 Red Jacks
3 Black (blue,or green) Jacks
1 Resistor, 7 Ohms, 10watt minimum, Wire-Wound (for the 6V side of the fuel pump, optional)
1 Knob for the 'Current Adjust' potentiometer

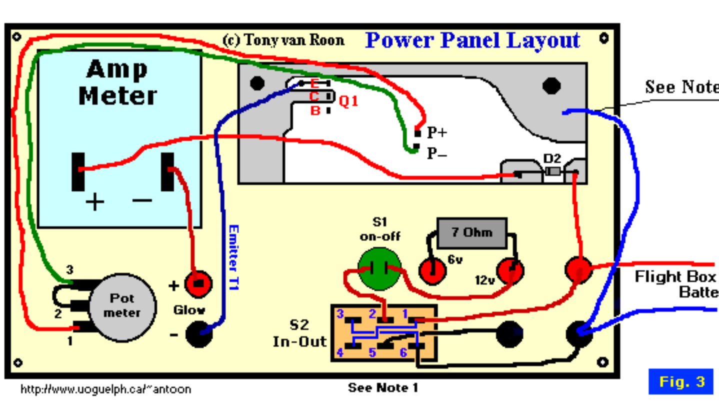

Fig. 3

* Note 1:
Cross-wire the 'Fuel In-Out' switch first before soldering the other wires to it. Pin 1 to pin 4 and pin 3 to pin 6. Use solid, insulated, wire like bell wire, or bend a thin paperclip in shape and solder that on (see Fig. 4). The two center contacts (2 & 5) are left open at this time (pin 5 is for negative (-) pump jack, pin 2 is for S1 pushbutton switch).
Solder also a piece of insulated, solid wire between Pins 2 & 3 of the Potentiometer P1.
Verify S2 to make sure the jumper wires between pins 1/4 and 3/6 are NOT touching each other!

o The '+' of the flight box battery goes to the anode of diode D2 (1N5401) of the Glowplug Driver circuit, and pin 1 of the Fuel In-Out switch S2.
o The '-' of the flight box battery goes to pin 6 of the Fuel-In-Out switch S2 and pin 5 goes to the fuel pump (-) jack.
o Another red wire from the pump-on/off switch goes to the '+' (red) of the fuel pump jack (which has one leg of the 7 ohm resistor connected also).
o The 7 ohm/10 watt (wirewound) resistor is mounted between the red +12V and +6V fuel pump jacks, and is used to reduce the voltage to +6 volt
o Connect a black wire between the glowplug jack (-) and the Emitter of T1 on the glowplug circuitry.
o Connect the other side of the glowplug jack (+) to the '-' of the the amp-meter. The positive (+) of the ampmeter goes to the cathode of D2 on the glowplug circuit board, as indicated.
o Connect the red and green wires from the p- and p+ on the glowplug circuit board to the potentiometer on the power panel. The -p wire goes to the walker (pin 2/3), the +p red wire goes to pin 1 of the potmeter.

Assembly & Checkout:

o Recheck all wiring and solder connections. No need to destroy your battery or glowplug circuit because of faulty wiring.
o Make sure fuel pump is off. Set the 'glow-adjust' potmeter somewhere in a middle possition.
o Connect the whole assembly to the flight-box ***battery***. No smoke or hot parts anywhere? Continue.
o Check the + jacks for polarity (do they show + something?) Good.
o Next is the fuel pump. Press the on/off switch. Working? If so, leave it on and check the fuel in/out switch. Is the fuel pump reversing? Good! Hit the on/off switch again to switch it off.
o Glow-adjust potentiometer (P1) in the middle possition? Connect a 6volt, 50mA bulb to the glowplug jacks. it should start glowing immediately; the amp meter should barely move. If you find that the ampmeter goes in the wrong direction just switch the wires to the potmeter.
o Vary the potentiometer and check if it effects the brightness a bit. It will vary enough to see that the circuit is operational. Keep in mind that a bulb does not act the same as a glowplug because of the internal resistance (Ri) when either the bulb or a plug are glowing. If you don't have a bulb handy use a 1 Ohm/1 Watt resistor (CAUTION: gets hot quickly!). If all seems to work, connect a glowplug and recheck. Watch the amp meter for this one. Don't go beyond 3 amp or so or you will burn the plug. If you hear a buzzing sound coming from your circuit, don't be alarmed, this is normal and the way it supposed to be. The sound is coming from the ampmeter. By the way, the maximum output current seems to be around 4 to 5 amps max depending on the plug. At the field, when the plug gets wet with fuel, it can draw more amps to keep the plug glowing.
o When everything checks out the panel is ready for flight box installation. I would recommend to insulate the solder side of the glowplug circuit with something like plastic, tape, heatshrink or even silicon adhesive.

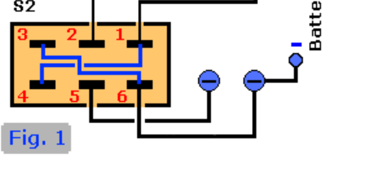

Fig. 1

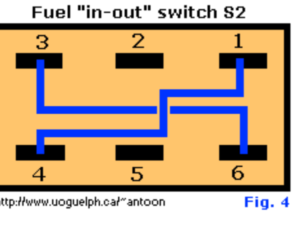

Fig. 4

Final Notes:

The Power-Panel can look very professional. I used rub-on lettering and a couple of (very) thin coats of protective spray to protect it from scratches and stuff. Too thick a coat of protective spray the first time may make your rub-on lettering run or produce tiny air bubbles. Covering can also be used successfully and looks also professional. Have fun with it!

If you only intend to use a 12-Volt fuel pump you can ommit the 6-Volt red jack and the 7 ohm/10 watt resistor. It can always be added later, at a time convenient for you. However, I don't think it's worth it since the two items cost only a couple of quarters and I'm working on a Rx field charger which will possibly be connected to this 6volt jack.

S1 in the prototype is a push on/off button, but basically any switch can be used. The push-on/off switch is just more convenient. Verify that the switch can handle the current; 1 or 2 amp should be fine.

Back to Glowplug Driver Circuit

Quick Navigation

- Home
- Electronic projects
  - GOSLOW
  - REVERSER
  - OPTOGLO II
  - HOTCHEK
  - On board data loggers
  - PDF project files
- 2000 Toledo R/C Show
- R/C planes
- Local clubs
- Hobby links
- Commercial links
- Guestbook
- Who is Brent?
- Send email

Number of visitors

TRACKED BY TheCounter.com

Brent's R/C Electronics Page

Welcome to Brent's R/C electronics page where you can download complete parts lists, schematics, and assembly instructions for several useful electronic projects for the R/C hobbiest. These are my original designs that have appeared as articles in Model Aviation, the official monthly publication of the Academy of Model Aeronautics. You are free to download and build the designs but commercial use is not permitted without a licensing agreement.

I also try to keep a very complete list of links to other R/C electronic hobby sites from around the world. Please contact me with suggestions to keep this list current!

Fly fast, fly smooth, fly low, and enjoy these circuits!

End of an era! After over six years and several thousand kits, I have to move on! It was fun and I enjoyed sharing. Didn't get your order in? Don't despair. Take a close look at the very detailed PDF project files, including even instructions on making your own printed circuit boards. You can do it!

	Electronic projects
	R/C planes
	Local clubs in Livermore, CA
	Hobby links
	Commercial links
	Guestbook
	Who is Brent?

DISCLAIMER: C. Brent Dane makes no warranty, written or implied, concerning the reliability of any electronic design presented in this web site. It is the sole responsibility of the user to evaluate the utility of any circuit for their application and C. Brent Dane is not responsible for any damage incurred by either the appropriate or inappropriate application of his designs.

Send email

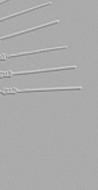

Foam Cutting Power Supply

A "do it yourself" Project

Front of Foam Cutter

After seeing other modelers building their model wings from plastic foam, I decided that I wanted to do the same. Building your wings from foam covered with 1/16 in. balsa can produce a strong and light wing that could be difficult to duplicate with the standard balsa rib construction, especially if the wing had a duel tapered, symmetrical airfoil. The standard way to cut foam is with the Hot Wire technique, using steel or nichrome wire through which an electrical current flows to heat the wire. However, the methods that many use to get the wire hot leaves something to be desired. The most common method I saw used was to connect a 12volt battery charger to 4 or 5 feet of nichrome wire which was tied to some kind of a bow. Using the variable charging rate, you could control (to a limited degree) the temperature of the wire and thus the speed of the cut. But if you cannot accurately control the heat, you'll get many poor cuts. Some have connected a series of light bulbs in line with the wall service of 115 volts AC. It works, but WOW, is it ever dangerous! Terrible shock hazard! I've even seen some connect the nichrome wire across a 12 volt car battery, also very dangerous. Over the years there have been several schematics listed in the model magazine for building a hot wire foam cutter power supply. All of them worked, I'm sure. Some were very simple, but left little heat control, and others were complex and expensive. Heat control is the secret for making good foam cuts. Also a good transformer is important for removing the electrical shock hazard that threatens the modeler in his shop. A good current limiting feature also makes the device safe from high current burns, which some auto mechanics have suffered when working with large 12 volt batteries.

The following **circuit** is a simplification of several older designs. This design uses readily available parts, is easy to build, has total temperature control for both a long bow (48") and a short bow (24"), and has served me well for the last 15 years. Many of the planes that I fly are my own design and I build most of them with foam wings, foam turtle decks, foam stabs, etc, usually with dual tapered, symmetrical designs. The short bow is valuable for sculpting foam pieces into various shapes, as it can be held in one hand and the foam sample in the other.

The first step in building one of these foam cutters is to take the **Bill of Materials** to your local Radio Shack and search for the parts. I picked this source because of shopping convenience and the total cost is a little above $30. Also get a small copper clad circuit board (CB), about 3 by 4 inches or larger in size. If you chose not to make the circuit board, you can solder the parts together using electrical stand-offs. The first order of business is to mount the switches, the potentiometer, the Red and Black electrical posts (#274-662), and the red indicator light on the **front panel** of the component box according to the picture and illustration. Next mount the transformer (#273-1512), fuse holder (#270-364), and electrical cord (#278-1255) in the box as shown in **photo**. Put some rubber feet on the bottom of the box (also from Radio Shack) so that it won't scratch your wife's end table when you take it to show her what a great craftsman you are.

The circuit is a simple AC Triac voltage control circuit similar to the ones used to control house lamps. The transformer provides the electrical isolation the makes this item safe to operate. The voltage at the bow will tingle a little, but will not harm the operator. The OFF/ON switch is a simple s.p.s.t. switch (#275-651). The "Long/Short" Bow selector switch is the same part number. Across the primary side of the transformer is mounted an indicator "ON" lamp (#272-712) which will light up when the unit is turned on. The temperature control is through the 5k ohm potentiometer R2 (#271-1714). The Triac gate current is controlled by R3, a 470 ohm, 1 watt resistor. This resistor is not part of radio Shack's inventory, therefore it may be required to solder two 1k ohm, 10 watt resistors in parallel. The capacitor, C1, is a 0.22microF disk (#272-1070). The 5 ohm, 20 watt resistor R1 is made of two 10 ohm, 10 watt resistors in parallel. They are large ceramic resistors mounted side by side. These resistors drop the voltage when the short 24" bow is being used. These resistors will get hot, don't touch!

Enclosed in this article is a actual size drawing of the **circuit board** (CB, 2.5" x 4"). Cut out this drawing and use it as a template, and paste it on the side opposite of the copper on the CB (circuit board) with some rubber cement. Next use a center punch to mark the center of each hole. Then drill the holes with the CB held tightly to some wood backing, making the four corner holes a 1/8" in dia and all the rest about 1/16" in dia. These smaller holes will be where you solder the components and wires. The larger holes are for the mounting bolts to hold the CB to the case. Cut the CB to the exact size as shown on the template (2.5" x 4"). Then, print out the copper side **drawing** and paste it on the copper side of the board. Use a sharp X-acto knife to remove thin strips of copper as shown. This will isolate the copper soldering pads from one another. Remove the paper. Insert the components in the CB on the side opposite the copper. Where the component leads stick out on the copper side, solder the component leads to the board being careful not to allow solder to bridge the cut lines in the copper. Cut off any excessive lead after soldering it. Bolt the Heat Sink on to the Triac with the fins pointing out. The Triac should be mounted in a vertical position, perpendicular to the CB. Next mount the CB in the box with 6-32 x 1" bolts and stand-offs. Finish soldering the connecting wires to the board before tightening the bolts. Drill 3 or 4 vent holes (1/4" dia) in the top of the box in the area above the Triac heat sink.

N.B. *The main problem that people are having is the placement of the TRIAC. On the board drawing, there is a letter "G" next to one TRIAC pin. That G stands for the Gate. Once they understand this, it becomes easier to insert the TRIAC into the board. They need to read the paper that came with the TRIAC so they know which pin is the Gate pin. I had made a comment that it is possible to substitute a different TRIAC if they could not get the specified one. Well, I was wrong. It seems that some of the fellows are inserting TRIACs that are very different than that specified, and of course, it won't work. As it turns out, Radio Shack is no longer a good source for electronic components. Ahhh, for the good old days when you could find electronic shops and Ham radio stores all over town. It's all history now.*

Plug the nichrome wire bow leads into the dual plug speaker connectors. It is best to trim the wire insulation on the wires back about 1/2 in. then tin the wire ends. After the wires are plugged in, turn the unit on and with the temperature control at half point and the heat switch set up to long. The wire should get hot to the touch almost immediately. If it doesn't, then examine the construction on the circuit board and wiring, and fix any errors found. After the unit is finished, bolt the top on and your and you're done.

When you use the foam cutter, be sure that the Bow switch is in the correct position. The switch must be in the "Short" position (down) if the 24" bow is used. Otherwise you may blow the fuse. Leave the unit in the "Long" bow position at all times unless you are using the short bow and you should have no problems. Before you turn the Foam Cutter on, turn the temperature (TEMP) control fully counter-clockwise, to minimum temperature. Turn the unit on with a bow plugged in and increase the temperature by turning the TEMP knob clockwise. The temperature of the wire increases almost immediately. With a piece of foam, test for the foam cutting temperature. Reduce the TEMP control until the cut is smooth with little foam evaporation around the wire. Remember, the smoothest cuts are made slowly. Spend some time practicing until your cuts are smooth. You will never go back to balsa ribs!

Enjoy,
Tom Weedon, AMA 2537, NSRCA 733

TECHLIB.COM

Hot-Wire Foam Cutter

- Home Page
- Wenzel.com
- Discussion Forum

Large Dimension Hot-Wire Foam Cutter

Update: My nichrome wire finally broke so I decided to try some stainless steel wire that I recently bought on eBay. This new wire is superior! It is very strong and it doesn't stretch nearly as much as the nichrome during warm-up. I have a couple of miles of this 4 ohm/foot and it would be a trivial matter to stick a few feet in an envelope if you would like some (charles@wenzel.com). I used the same power source so my wire gets a lot hotter than with the 10 ohms/foot nichrome but it doesn't seem to mind.

Hot wire foam cutters are a must when working with polystyrene foam because they make neat, straight and smooth cuts that simply cannot be duplicated with any other type of saw. Most cutters are hand-held devices looking much like a cheese cutter without the roller and operate a bit like a jig saw. The foam cutter described here is more like the "table saw" version of hot wire cutters featuring a large work surface with plenty of clearance on all sides and with generous height for cutting thick pieces.

The cutter was made from whatever scrap materials were on hand and each component could be built any number of ways. The base surface should be smooth so that the foam can be easily manipulated and suitable materials include counter-top laminate, high gloss wood, or simply a piece of Melamine shelving as was used in this version. The base dimensions are about 12" x 16". A piece of inside corner molding was placed along the back edge of the base to act as a cutting guide for straight cuts. The molding is glued down "backwards" to get a nice right-angle edge. A rectangular cross section strip of wood would serve the same purpose.

The vertical support could be a piece of plywood fastened to the back edge of the base or the rest of the Melamine shelf. This design uses a metal handle from an old electronic instrument. Make the height a little more than 12 inches so that the cutter can accommodate 1 foot foam thickness.

An arm extends out about 1/2 of the base depth which, in this case, is about 6". The arm in this model consists of a block of wood, a long phenolic standoff, and a ceramic insulator. The nichrome wire will stretch quite a bit when it gets hot and some mechanism is needed to keep the wire taut. The block of wood is fastened loosely to the vertical support with two screws so that it can pivot up and down a small amount and a spring was added to pull up on the arm.

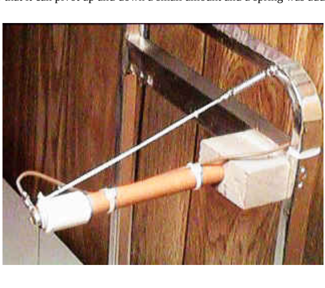

The phenolic standoff and ceramic insulator were held together with short piece of threaded rod made by cutting the head off of #8 bolt. First, the threaded rod was screwed into the ceramic insulator until it bottomed out and then the other end was screwed into the standoff using the ceramic insulator as a handle. The top wire connection is made with a screw in the end of the ceramic insulator. The hookup wire has a solder lug termination and the nichrome wire was simply wound around the screw a couple of turns. During assembly, the arm is held down as the screw is tightened. A little bit of experimentation will be necessary to get the spring tension right when the wire is hot.

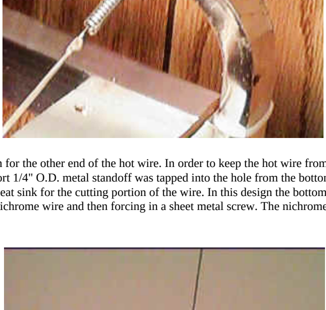

A 3/16" hole was drilled directly beneath the arm for the other end of the hot wire. In order to keep the hot wire from touching the wood, the hole was partially drilled out to 1/4" from the bottom side and a short 1/4" O.D. metal standoff was tapped into the hole from the bottom. The standoff should be much shorter than the thickness of the base so that it does not act as a heat sink for the cutting portion of the wire. In this design the bottom electrical connection was made by inserting a piece of hookup wire into the standoff with the nichrome wire and then forcing in a sheet metal screw. The nichrome is difficult to solder so some sort of mechanical crimp or weld is needed.

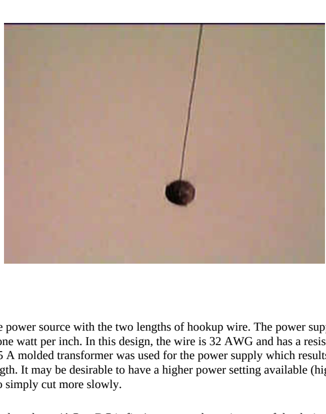

The two ends of the hot wire are connected to the power source with the two lengths of hookup wire. The power supply for the hot wire will depend upon the gauge of wire and the length. Plan on supplying about one watt per inch. In this design, the wire is 32 AWG and has a resistance of about 10 ohms per foot making the total resistance about 13 ohms. A surplus 13 VAC, 1.5 A molded transformer was used for the power supply which results in about 1 amp of current and about 13 watts of power which is just perfect for the 13 inch length. It may be desirable to have a higher power setting available (higher supply voltage) but the wire can become excessively hot when it is not cutting. It is best to simply cut more slowly.

Here is how to calculate the necessary power supply voltage (AC or DC is fine): measure the resistance of the desired length of nichrome wire and multiply this resistance by the length in inches. Now take the square-root to get the required power supply voltage.

This tall cutter will come in handy for a variety of craft projects or for fabricating special shaped foam components. An example of a difficult cut is shown below where a "staircase" is being cut from a thick piece of shipping foam. The finished steps are painted to look like old, cracked concrete - a perfect application for the surface texture the cutter leaves behind!

Foam Cutter

Foam cutting is a relatively simple process once you have the required tools and an acquired level of experience. So once you are set up, don't be discouraged if you butcher a couple blocks of foam. You'll soon get use to the rhythm, and your cores will turn out nice and smooth.

Tools Required

In general, the main tools, accessories and software that will be required to perform all your foam cutting requirements are listed below:

- A hot wire cutting bow;
- A suitable power supply to power the hot wire cutting bow;
- In order of preference: a band saw, or a jig saw or a fret saw to cut the various types of templates you will require to make wing cores or fuselage parts;
- In order of preference: a pedestal drill or hand drill for drilling holes for 4mm dowels,
- Label paper;
- A 30cm length of 4mm dowel,
- A jig for cutting foam blocks to size (how to make one below); and,
- Compufoil airfoil plotting software for designing wing core templates, or the like.

The Hot Wire Cutter

Before you start, you should make the decision on whether to make or buy. CLICK HERE and see this link on prices for a complete unit.

The hot wire cutting bow is a cheap and easy tool to make. There are many variations on how to make them, a sample is listed below.

How to make a Bow
In this case, the bow is made up of an aluminium square tube brace with hardwood arms. This is my preferred bow as it is easy to set up, and importantly, very light to use.

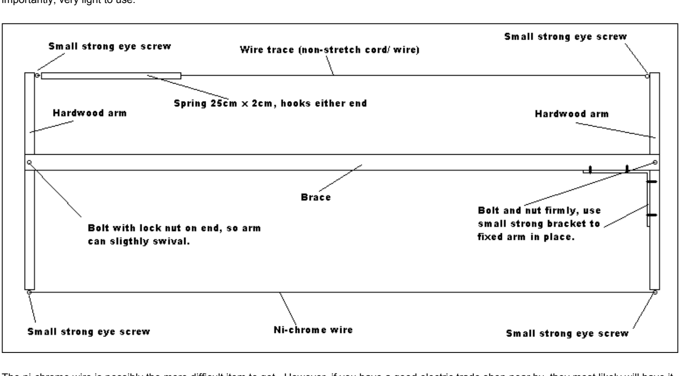

The ni-chrome wire is possibly the more difficult item to get. However, if you have a good electric trade shop near by, they most likely will have it in the form of a replacement heater element. These are of the radiator style - ceramic tube with the ni-chrome wire tightly wrapped around it, at either end a metal terminal to connect to the heater. An element of at least 40cm will have a surprisingly large amount of wire thereon.

The spring that maintains the tension has a hook at either end and can be found at your hardware store. See example below:

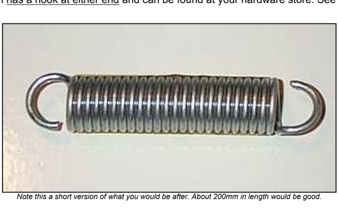

Note this a short version of what you would be after. About 200mm in length would be good.

The spring has to be quite tightly sprung, but not so tight that you cannot partially stretch it by hand. The spring serves two purposes, in addition to maintaining the tension, it also compensates for the movement in the length of ni-chrome wire for when it heats and cools. Should a spring not be used, the ni-chrome wire will expand under heat and become slack. The hook end of the spring that attaches to the eye screw should be cut slightly shorter to make it easier to connect to the eye screw. Take off only 3-5mm.

The ni-chrome wire is twisted at either end to hold in place. Make at least 8-10 twists.

The wire trace that connects to the spring should be non-stretch. Fishing wire trace works well. After you have the ni-chrome wire in place, attach the spring to the bow and connect wire trace to the opposing arm. Take the wire trace through the hook of the spring and tension. Once the ni-chrome wire feels tight like a guitar string, you've reached the correct tension. Clamp or twist the trace into that position permanently. IMPORTANTLY, the tension should not be so tight that you cannot remove the spring by hand from the eye screw. As, when the bow is not in use, the spring should be disengaged to prevent stretching of the ni-chrome wire.

Power cables
Use at least 8amp automotive multi strand wire. **NOTE**: the rating of the wire should always be higher than the maximum power output of the power source you are going to use.

Wiring the bow is very simple. To keep the wiring tidy, run one cable through the length of the brace. Attach wires to the eyes that attach to the ni-chrome wire, and solder in place. Lead the power wires off to one side of the bow so they are out of the way when in use.

Use connection plugs of your choice to connect to the power source.

Length of Bow
The length of the bow is up to you. I have two bows, one 1300mm and the other 300mm. The larger is for cutting wing cores, whilst the other is used for trimming and fuselage work. Below is a picture of my trimming bow:

The Power supply

Here a number of options that can be used, but seek suitable advice if you are unsure about such devices.

Firstly, never use power directly from a house power outlet (AC). Results could be fatal. Use a fuse protected power supply that provides DC. Usually an output of 12-18 volts is good, with a current rating of 3-8amps. The variable power supply that I use is 18volts, with a 5amp rating. It has a gauge the indicates the amount of amps that are being drawn. This is very useful once you know what current works well with what foam, as you can set it straight to the correct value without having to perform tests. In my case, for both white and blue foam, I set my current to only 1.5 to 1.8amps. This provides a nice clean cut without the foam being damaged by an over heated wire. My cut rate at this temperature is about 1cm every 1-2 seconds. Below is a picture of my power supply that was made by my friend Don:

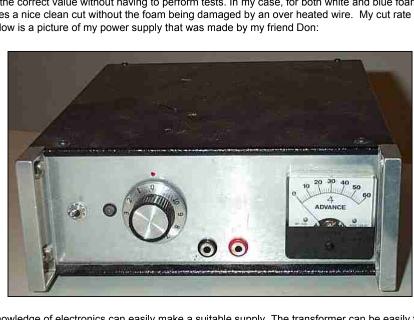

People with an adequate knowledge of electronics can easily make a suitable supply. The transformer can be easily found at any electronics store for around AUD$40.00. The variable control is simply a 555 timer that varies the pulse width.

Well my very good friend Don has finally completed the information on my power supply he made for me. He has forwarded circuit diagrams and a text overview for construction. He says it very easy to make by anyone who has a reasonable electronics knowledge and good soldering skills. He does however stress that suitable advice should be sought when connecting to the mains. ***Click Here****, or on the navigation button on the top of this page.*

An alternate power supply provided from another friend is shown below. Check out the diagram:

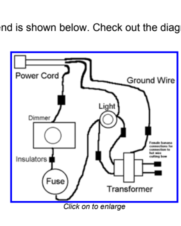

Click on to enlarge

The unit seems to work well, but Don said that some light dimmer switches do not like switching inductive loads, and may fail. So the 555 timer option would still be the most reliable option. If you are still interested in trying this option, I have listed what was used to make the power supply shown to me.

In this situation you will need:

- Transformer with output of approximately 25V 2AMPs

In this case the transformer had multiple connection options:9V 6.6A, 12V 5A, 15V 4A, 18V 3.3A, 21V 2.9A, 24V 2.5A. The last being the one to solder up to.

- Indicator light rated for AC

- Fast-acting glass 2amp fuse (x 2, one for back up)

- Panel mount fuse holder for the above

- 3amp rated banana plugs (x 2), male & female (for panel mount)

- 2-3amp rated flex cable
- Terminal blocks (Insulator)

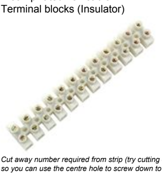

Cut away number required from strip (try cutting down to a minimum of two, so you can use the centre hole to screw down to case)

- A standard home light dimmer, one that also serves as an on/off switch

In this case you would discard the large panel for the small. The switch will be used to turn on/off the unit.

Make or buy a metal box to house the electric. Use the banana plugs as shown on my unit above to connect the flex cable to the bow. Use the diagram above to assemble the unit. As said above, seek suitable advice if you are even slightly unsure about putting it all together.

Other options...
I know of people who use car battery chargers as their power supply, and they have good results. The only problem with these chargers is that you cannot adjust the current, as the resistance of the ni-chrome wire does this. If using a car charger, the types most suitable have a switch for 6 or 12 volt operation and a current rating of 4-8amps. Lower rated chargers at 2amps may require you to shorten the length of the bow to achieve the correct temperature.

Another power source can be your electronic speed controller (ESC) attached to a high mah rated battery pack. Be sure the ESC is 20amp+. Adjust the throttle to increase/decrease temperature. Unfortunately, your time will always be limited under this method.

Whichever way you decide to go, always avoid short circuits (positive negative terminals touch). They damage equipment and can cause fires. Polarity on these setups do not matter.

Template Cutting

Below is a typical template produced by CompuFoil:

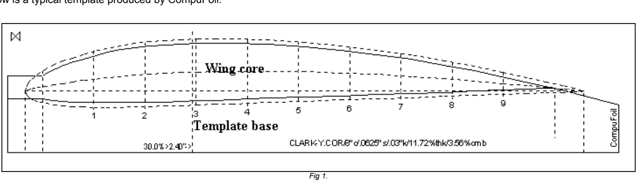

Fig 1.

The solid lines represent the template. The dotted lines outside the wing profile indicate the surface thickness after a balsa sheet laminate has been added.

Once you have played with the (CompuFoil) program, and have your desired profiles, you have to make a decision on what type of material you are going to use for the template - I can give you a couple of ideas.

What is preferable is a thin, heat resistant, and easily cut material. Some people use metal sheet for its heat resistant qualities, but it is difficult to shape. Others use thin ply or craftwood about 4mm, but these are easily damaged by the heat of the hot wire. Others use laminating material for table tops. This sounds like a very suitable material, as it is easily shaped and heat resistant. But not always that easy to get. The most simple template material I have used is 10mm craftwood, coated in epoxy or fibre glass resin to provide some protection against the heat of the hot wire cutter.

When using the 10mm craftwood there is a trade off. The extra width provides greater protection against the hot wire, as the heat dissipates faster across the wider surface. However, if cutting delta shapes some accuracy is lost. But, as the method is used on both left and right wing panels, the error created in the profile by the extra width will be the same for both wings.

How to cut out the template

A mini sized band saw is ideal for this application. Their bands are usually fine and take little in their cut. Using the 10mm craftwood, I like to make a two piece template. The first piece being the shape of the wing core, and the second being the template base. The two pieces are joined by two small dowel plugs (say 4mm diameter). This is an excellent method for accuracy, and you'll see why later.

Once you have printed out your template onto label paper, the label paper should be cut along the bottom line of the template base, so you can match up this straight section to a straight section of your craft wood. When cutting around the sides and across the top, leave plenty of excess. If you cut too closely along the top of the wing core, you will have difficulties in seeing the cutting line.

Once you have applied the label to the craftwood, it is then time to make the first cuts. Here you should only cut the left and right side, and the top of the wing core. ***Do not*** cut the wing core template away from the base of the template at this stage! Once you have finished, you should have the wing core and the base template cut out as one piece.

Next a set of two 4mm holes will be drilled from the bottom of the template. Line up the two templates from the bottom so they are parallel. If you are cutting a delta, then you must line up the templates from the rear. On the template above, the numbers on the side represent cutting stations. The rear is identified by the end with the higher number. For the template above, I would make the holes at cutting stations 2 and 6. The holes being drilled from the bottom should have a depth that will come close to the surface of the top of the wing core. But do not break to surface. If cutting deltas, still try to drill the holes in parallel. This will be quite important to achieve. See below:

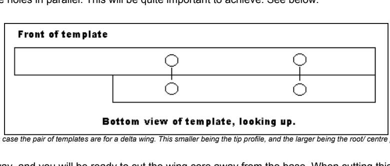

In this case the pair of templates are for a delta wing. This smaller being the tip profile, and the larger being the root/ centre profile.

Drill the holes your preferred way, and you will be ready to cut the wing core away from the base. When cutting this section, make sure to cut beneath the wing core template line so not to lose any of the core's shape. This cut must be precise! As the cut also forms the surface of the bottom of the wing.

Once this is complete, your template is now ready for finishing. To achieve a nice clean and smooth surface on your foam core, your template MUST have smooth surfaces to *glide* the hot wire cutter across. The finishing process requires the top surface of the wing core and that of the bottom template to be made as smooth as possible. Importantly, don't go sanding like mad to achieve this, as you will damage the intended profiles. Use car body filler as an option to repair cut marks. Otherwise, plaster board filler combined with fibreglass resin also works well. DO NOT fill the drill holes on the surface of the bottom template.

Now for the dowels. Four dowel plugs will be needed. Two will be placed in the bottom of the wing core template so you can plug the two templates together. The second two are inserted into the bottom template so you can plug the template onto a flat board.

Now to check your templates' surfaces. Check all four surfaces (two on each template) with your hot wire cutter by running the wire across the surfaces. The wire should run nice and smoothly without any twangs.

Once this is done your templates are finished. See below for examples:

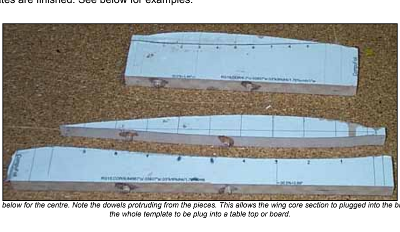

The top template is for the tip profile, the below for the centre. Note the dowels protruding from the pieces. This allows the wing core section to plugged into the base, and the dowels in the base allow for the whole template to be plug into a table top or board.

Above the templates are plugged into the base board, and ready to try the first cut. This cut will define the top profile of the wing.

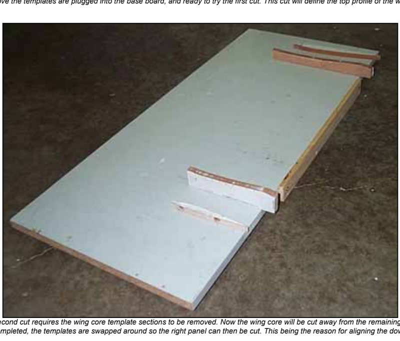

The second cut requires the wing core template sections to be removed. Now the wing core will be cut away from the remaining foam.
Note: once the left panel is completed, the templates are swapped around so the right panel can then be cut. This being the reason for aligning the dowel positions as shown above.

Preparing the foam block

The next step is preparing the foam block. Here you shape the foam to your desired shape: rectangle or delta. A jig is used to ensure nice and clean 90º cuts using your hot wire cuter. See below:

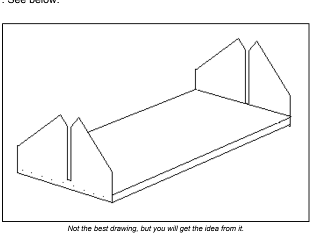

Not the best drawing, but you will get the idea from it.

By placing the foam block in the jig, you slide the hot wire cutter in using the guides to make a vertical cut. If you can, use a saw to cut a line in the base board from one template guide end to the other. This will allow the hot wire to move a small, but safe distance away from the foam after you have made your cut, giving you time to turn of the power without damage to the foam.

Have a look back at the template at Fig 1. At either end of the template are two dashed vertical lines. The inside dashed vertical lines are the indicators for where you should cut you foam block to size.

The Finale: Cutting out the foam core

Now you are close to making your first foam wing core. You should now have your templates and your foam block ready. Next, you will need a suitable surface to plug your templates into. Your can use your work bench, or preferably a nice and straight plank of timber. Drill your holes into the timber to accommodate your templates. Make sure they are parallel:

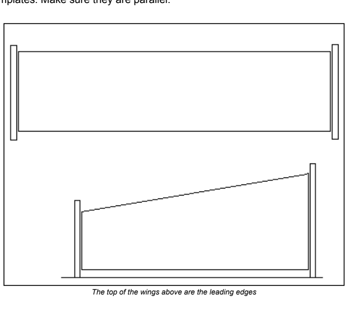

The top of the wings above are the leading edges

Use double-sided tape to hold the foam in place. Others I know just use a heavy weight from above - seems to work OK.

Now, don't expect a perfect cut core the first time. This is very important to know. I still damage cores every now and then by using the incorrect heat setting, or by not pulling the wire evenly across the template. Test the cutting temperature of the wire. The wire, when moving through the foam, will slightly hiss, and the cutting rate should be about 1-2cm per second (or less). You will have to test the cutting rate to see what gives you the best result. Cutting slower with less heat will give better results, but you can damage the template by not moving fast enough! A catch 22 situation.

Now you are satisfied with the temperature, get ready to make the first cut. The first cut will be from the leading edge to the trailing edge on the top of the wing core template. The first section of the template is known as the "ramp". This is where you rest the wire prior making the cut. Take note of the station markers. On a rectangle wing, you pull evenly across the length from front to end, ensuring the wire emerges from the foam in one instance. On a delta, you must ensure the wire passes over the correct stations at the same time. Having two people for cutting deltas is a good practice. I have also found that using a sawing action works well whilst pulling. Or, slicing from the small template to the larger as you pull back.

Turn on the power to the hot wire cutter. Place the wire on the ramp and pull the wire across the surface of the template. Ensure to pull smoothly, holding down the bow to keep contact with the template at all times. BANG! The top cut is done! Remove the wing core templates from either end. You are now ready to cut the bottom surface. Starting at the ramp again, cut the bottom surface. Once finished, remove the core and have a look! Job Done.

More for Delta's

For those cutting rectangle wing cores, the job should be done. But for delta's, you're only half way through cutting. Now you have to cut the second panel. Now you will find out why it was so important to make the dowels the same distance apart for both templates. Exchange the inner and outer templates position. To make the opposing panel, the templates need to be in opposing positions:

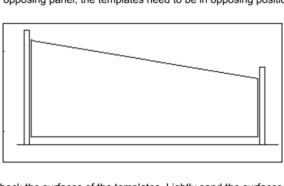

Before beginning the second set of cuts, check the surfaces of the templates. Lightly sand the surfaces of the templates if they have been damaged by the heat. Repeat the cutting process.

Tight Delta's

Cutting tight delta's is not easy. Lots of damage can occur to the outer (smaller) template as the speed of the wire across it will be much less than the inner panel. Try using the method below as a helper in cutting tight delta's:

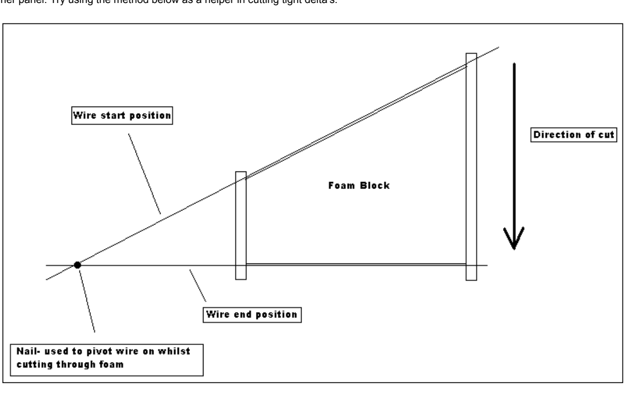

Practice makes perfect! Well almost perfect. Remember the core will be covered in either brown paper, balsa or epoxy. In the case of brown paper and balsa, most imperfections will be hidden. The smoother your finish, the stronger the wing will be from the greater area the glue has contact, and the airfoil more accurate. You should lightly sand the surfaces of the cores with sand paper to finish.

One additional important note.
If you intend to balsa skin your foam cores, you will need to complete your cuts without damaging the upper and lower foam off cuts. These excess parts of the foam block will be extremely important when compressing the balsa sheet against the foam. So do not discard or damage them.

I hope the above has been useful as an introduction to foam core cutting.

This page was last updated on Tuesday June 26, 2001.

Building a Hot Wire Foam Cutter

Hot wire foam cutters work by heating special wire to the point where it vaporizes foam it is brought in contact with. It is a technique commonly used commercially and hot wire foam cutters are available for any where in several hundred to several thousand dollars. Here, I will happily sell you mine for a fraction of that but you should probably know that it only cost me $4 to buy the resistance wire at the local hobby shop ... maybe $10 - 20 dollars to scrap stock I already had.

I knew it to be easier to supply their own power supply. I am using a supply from an old external SCSI drive. My cutter runs from the 12v end and pulls 2.5 amps of electrical power.

My design is pretty simple and breaks down into four parts; base, top, shuttle, and cutting arm. Each piece is described below.

Shuttle

Ok, so this feature is not strictly necessary. I added a shuttle to allow for a variable cut angle on the cutter. When I researched home build foam cutters that other people built it seemed to be one of the big features everyone wished they had added to their design.

A small hook extending from the base of the shuttle bar holds one end of the heated wire. The shuttle is driven in a slotted position along a hard surface. Adjusting the position of that shuttle bar along the screw allows for an adjustable cut angle. Recall from your Trig that the higher your supports and the farther your shuttle will have to move to reach the desired cut angle. For the default bar of my cutter for example, which is 10cm high, a maximum cut angle of 45 degrees can be achieved. That sort of a cannot be increased by lowering the cutting arm. With this design it is simple to have multiple interchangeable support arms with differing end heights.

 

The bar is driven along the base screw using a piece of metric rod to used as a guide. The rod keeps the threaded rod from along the entire road. Probably overkill but the application but it is simple to add and ensures the shuttle keeps working without binding.

I used 1/8 inch 24tpi threaded rod and 3/16 inch steel stock but with because that was what I had in my scrap box. The loads here are so light that any straight steel rod will work for the guide or total screw. As a suggestion you should probably look for the lowest TPI so the lead screw you can find.

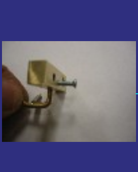

The screw that you are twisting into the block is used to attach a ground wire to the shuttle. This ground complements the positive terminal on the support arm.

Base

My base was build around an old wooden monitor mount. Pretty much any sturdy wooden base should work with this style of design. I would recommend finding one that will fit your intended power supply so that your cutter will be self contained.

 

Since I was using a thin top I cut out four blocks and glued them into the corners of the base. Those blocks were then drilled and formed the seat into which the base's top gets screwed down.

 

Both the threaded and steel rod are seated in two wide pieces of brass stock mounted to aluminum bar stock. Both brass and aluminum stock in this type are commonly available at most hardware stores. The steel bar is drilled to hold the brass bar by the walls. The threaded rod on the other hand needs to extend beyond the case walls.

I used a small piece of brass tube stock as an insert to the hole in the side of the box through which the lead screw extends. This keeps the action of the screw from biting the wood.

 

If your are like me and dont have a lathe you can make the notches needed to clip to the threaded rod with either a standing or milling file and a triangular file and a hand drill. Set up the base and mark off where the clip is to fir the screw with felt tip pen. You will likely have to do this several times so keep things handy.

By chucking up the threaded rod you can *slowly* work the rod along the edge of a file. Make sure you move the rod back and forth along the file so that wear on the file is even. If you dont you will ruin the file. Start with the triangle file to cut the edges to your notch and then remove the bulk of the material between the notches with a milling, warding, or similar file.

Again if you don't have a lathe you can flatten the ends of round stock by chucking it in a hand drill and slowly working it against a file. Use wood blocks to sandwich your file in a bench vice. Then slowly work the rod across the file. The averaged out surface will be close to flat and tangential to the axis of the rod's rotation.

The last piece to add to the base is the "u" shaped support block that holds the support bar. The support bar on this design is friction fit. The fit needs to be tight enough to firmly hold the arm in place yet loose enough that the arm can be removed for storage or to change arms. Not hard to do just a lot of filing and measuring to get it right.

Base Top

The base is cut to size to match the base. Then four holes are drilled to match the pilot holes in the corners of the base. Use counter suck screws and bevel the edge of the holes so that the face of the screw sits flush with the table top.

Since the support arm is friction fit once the screw holes have been added attach the top and mark arm. Make sure that you under cut the measured mark slightly and then repeatedly file and measure the opening to get a tight friction fit.

The slot for the nichrome wire needs to be measured, marked, and cut after the shuttle is finished. If you dont have a table saw or router to make this cut you can mark a line then drilled repeatedly along that line removing the excess material with a file. It is not ideal but it is what I did here and if you are careful it will yield reasonable results.

Cutting Arm

The base of the arm sits on the outside of the box with a toe extending through the top to be held in place by the "u" shaped support block. I used a mortice and tenon to quickly join the two pieces of the arm together. A spring loaded bold mounted on the arm provides wire tension.

The heated wire is wrapped around a screw on the tensioning clip. Tightening the screw locks down the wire. The spring loaded bolt in the arm is screwed into the clip providing tension. A washer and used below the support arm both to retain the spring loaded bolt and for use in setting the initial tension level on the clip.

Using the Foam Cutter

So a friend of mine Ross immediately suggested that we try cutting one of those wooden model / toy dinosaurs out of foam. Actually he suggested that we cut it out of foam and then try pouring it in aluminium with a lost foam process this weekend. Ross is known for these sorts of cool and slightly excentric sort of ideas.

 

So I used some packing foam that a monitor was shipped in. I the foam into blocks small enough to feed to the hot wire foam cutter with a hack saw. Those blocks were then measured, marked, and cut into sheets of foam. I then marked out the outline of the pattern of the various pieces and then and cut out and assembled the pieces. The total construction time was about 40 mins and most of that just experimenting and playing. Another head could likely be built from scratch in about half the time.

Hot Wire foam cutting Links to get you started...

Ok, here is a quick and dirty design and another with a cool idea for power and yet another basic design. A ll look functional and the first two have good ideas for a rip / guide fence; something that my design lacks.

I would say that this is a nicer looking design with cut angle selection It certainly influenced me. It even has an indicator for the cut angle the support arm is set at. The only thing I didn't like about it was the method for locking down the support arm.

This site is an excellent resource. His pages walk you through his hot wire cut foam research and design process from start to finish in making high precision foam cut parts for making linear bearings. Especially look at phase three as it shows his CNC hot wire cutter.

Email -- **joeboy@hhhh.org**
Back to my home page.

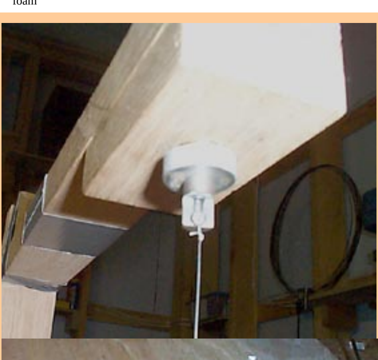
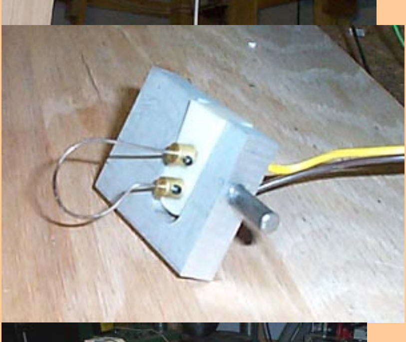

LOST FOAM CASTING

Lost Foam casting makes it possible to cast some parts that would require some very intricate wood patterns. I use foam for those types of castings. If it does not turn out, cut some more foam!   Actually, it is great for some "quick and dirty" castings as well. If surface finish is not critical, lost foam can produce "one off" castings faster than making wood patterns. To date, the few lost foam castings I have done all turned out as hoped. These castings are normally done in "loose sand", no ramming, and the sand is dry. The only place for some moist sand might be around the sprue so it does not collapse. Using thin aluminum tubes (soda cans, etc), for sprue holes, makes it easier. I am using fine grit sandblasting sand at present. My first lost foam was done in Petrobond, but the burned foam does not do much good for the Petrobond sand. There is much more to be said regarding lost foam, I would suggest checking some of the excellent websites out there. Thats what I did.
Using foam for patterns requires a means to cut it. A "hot wire" cutter is the most popular, so I built one. It has some nice features, and others that I should include if I ever make another. It would be nice to be able to tilt the cutter wire for angles, as well as adding a good fence to guide the foam as it is being cut. Presently I clamp a straight edge to the table, OK but not very repeatable.
The wire is connected to an adjustable spring loaded nut. The spring keeps tension constant, the knurled knob adjusts tension.
This is an auxillry cutter made from heavy wire, to cut curved shapes. The wire is easily replaceable, and the loop can be adjusted vertically.
The power supply uses a Variac, 0 to 56 Volts, and a 24 V transformer for isolation. The Variac was left from a project abandoned long ago, finally has a good use. I presently have screw terminals to connect the cutter, but will be putting some sockets for jacks as a better method of connecting.
I used lost foam castings for both my IC engines ; there are pics of them on those pages. Shown below is my very first lost foam casting.



Not knowing better at the time, I made the pattern of white "bead stryofoam". It has a tendancy to produce a lot of texture on the surface, undesireable in most cases.   This pattern still needs a sprue. The resulting casting (with sprue attached) is shown on the right.
The casting after milling the top and feet flat. It was used as a base for the water jacket on my Atkinson Engine..

FURNACE

MULLER

BENCH / FLASKS

SITEMAP

One item that is high on my "to do" projects list is a small lathe to hold foam pieces for cutting circular shapes, such as pulleys, etc. I saw the concept for one on another website, and it has lots of potential.

CRUCIBLE & TOOLS

Hotwire Foam Cutter

[Home](#)

[Work](#)

[Shop](#)

- Machine Tools
  - Maximat
  - CNC Taig Micro Mill
  - CNC Router
  - Southbend Shaper
- Foundry
  - Furnace
  - Molding Bench
  - Sand
  - Sand Fluffer
  - Accessories
  - Gating
  - Problems
  - Foundry Test
- Reference Information
  - Tap Drill Charts
  - Machine Tapers
  - Size Information
- Electrolytic Rust Removal
- EDM
- Hot Wire Foam Cutter
- Projects
- Piper PA12

[Travels](#)

[People](#)

[Other](#)

[Links](#)

[email](#)

I recently finished my hotwire foam cutter and am happy with the way it turned out. I plan on using this to simplify the production of patterns for lost foam casting (see the foundry pages for more information on this technique). I lucked out and had most of the bits and pieces that I needed for this project leftover from some other projects.

The power supply I used is a little more involved than what is required but it works well and I had the pieces. I used a PWM (Pulse Width Modulator) to control the heat to the wire. This is a simple electronic control that essentially turns the power to the wire on and off very fast and you can control this rate. I used a 12.6 volt, 3 amp transformer to provide the power, a bridge rectifier to convert the AC power to DC power, and a large capacitor to filter the DC power. The filtered power was then fed to the PWM pcb. The output from the pcb goes to the cutting wire. There is a rheostat which controls the wire heat and an on off switch (with an led power indicator) located in the little project box attached to the lower front of the cutter, it is visible in the picture below.

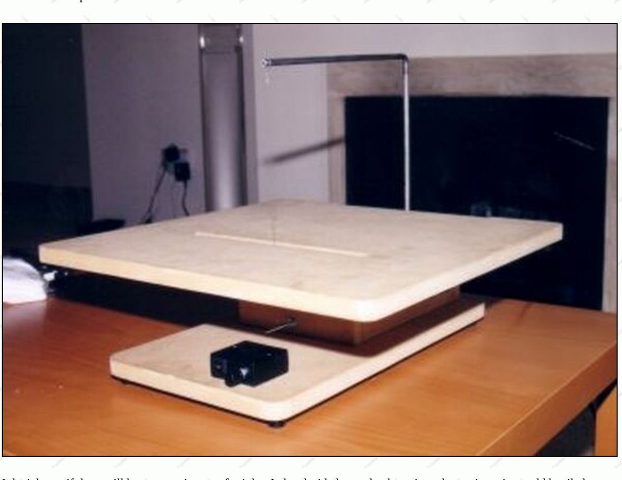

I don't know if there will be any requirement for it but I also decided to make the unit so the cutting wire could be tiled to make angled cuts. It will tilt up to 45º either side of vertical and the bar that clamps it in place is engraved so you can set a given angle, this can also be seen in the picture below. I used my CNC Taig mill to do the engraving.

This page was last updated on undefined

rocket team vatsaas

what's new | RTV bios | contact

home | arsenal | cinema | construction | ground | tools | lessons | systems | team rocs | missile-aneous

Page Rating (6 votes)
Interesting
Useful
Bizarre

Feedback (9 responses)
On 11/17/2004, John Grywusiewicz wrote:
"Excellent! Outstanding!! Told me everything I needed to know. When I build mine I'm going to get a tuning gear from a guitar, install that in one end of the bow, drill a small hole in the other bow, run my string through the small hole and tighten it w/the tuning peg. How do you like me now?"

What's New
There are 2 recent changes to the site

Hot Wire Foam Cutter

I built this tool because I needed to develop a way to shape a big block of Styrofoam when I built The Happy Birthday Party Napkin Rocket of the Apocalypse. The photos here are from that project, but I've utilized this concept in the construction of a variety of items.

Hot wire foam cutters are used by hobbyists of all stripes to contour Styrofoam into a vast array of shapes for a wide variety of uses. Model railroad builders shape foam into landscapes. RC plane builders shape foam into aircraft wings and fuselages. Stagehands shape foam for theatrical sets and props. And because Fiberglas can be applied over the shaped foam to create a rugged and lightweight structure, rocket builders can shape foam for use as nose cones or airframes.

There's more than one way to shape foam. You can sand it, cut it with a saw, sculpt it with a knife -- I even know some rocket makers who use a hand router to shape large nose cones. Different tools work better for different craftsmen, but the tool that has worked best for me is a homemade contraption that uses a heated wire to easily melt its way through the foam. Small hot-wire tools can be purchased at hobby stores for thirty to forty dollars, but these are really too small to use on anything but the smallest model rockets. The good news is that you can make a hot-wire tool for only a few bucks that is big enough and burly enough to make Tim 'The Tool Man' Taylor grunt in approval.

Parts List

- Louis Marx Model #1229 50 Watt Transformer, 13 volts variable (or similar)
- Two (2) 10-inch lengths of 1.25-inch PVC
- Two (2) 2-inch lengths of 1.25-inch PVC
- Two (2) 18-inch lengths of 1.25-inch PVC (this length is up to you -- more or less will change the working area of your tool)
- Two (2) 90-degree elbow fittings for 1.25-inch PVC
- Two (2) T-joint fittings for 1.25-inch PVC
- PVC Cement
- Two (2) 10-32 eyebolts with wing nuts and washers
- 10 feet of heavy stranded wire (16 gauge or thicker)
- 0.008 to 0.015-inch (thickness) single-wire steel guitar strings (available at your local music store)

Power Supply
I purchased my vintage model train transformer on eBay for $7. You may have a better alternative for a power source, but I recommend you use one with a variable voltage control. Also, newer models have circuit breakers built into them that disqualify them for use in this application, so older power supplies seem to work best.

Cutting Bow

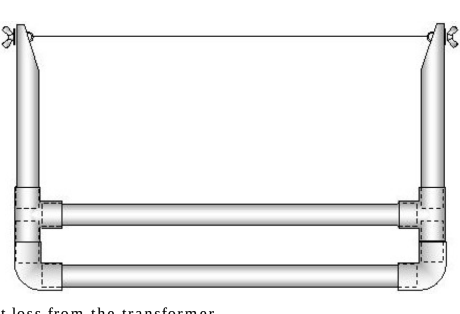

Assemble the 'bow of the hot-wire cutter as shown in the drawing. Drill holes in the ends of the prongs for the eyebolts and attach with wing nuts and washers. (You don't need to cut the ends at an angle as shown -- I added the angled cuts when my third foam project was too wide for the bow I'd made for my previous two foam projects). Attach the stranded wire to the eyebolts with the wing nuts and tape the wire to the bow to keep it out of the way. Use heavy wire (like power cord or hefty speaker wire) to minimize current loss from the transformer.

Cutting Wire
Hobby stores sell nichrome wire specifically for hot wire cutters, and I tried using this stuff first. It broke immediately. After knocking myself in the temple with the heel of my palm for a few minutes, I ran into the house and pulled a steel 'E' string from a spare guitar. The knots of twisted wire I used to attach it to the eye bolts would probably draw horrified screams from an Eagle Scout, but they held together and I was in business! I found that I could compress the prongs of the bow together when attaching the guitar string, and when released the prongs pulled the wire to just the right tension (unless I compressed the prongs too enthusiastically and the string broke when I let go). I've used guitar strings as thin as 0.008" up to 0.015", and decided I prefer the thicker ones. The strings eventually fatigue and break, so keep a few spares around when you're working on bigger projects.

Tips

1. Use safety glasses and try not to stab yourself in the finger when twisting the guitar string onto the eyebolts. The ends are really sharp.
2. Attach the stranded wire to the transformer before trying to cut foam. It is possible to skip this step and generate heat by rubbing the guitar string rapidly back and forth, but it is not recommended. The wire will emit a slight hum when current is applied, and will continue to hum until you teach it the words.
3. Increase voltage incrementally and test the heated wire on a spare piece of foam. Add power if the wire doesn't cut easily through the foam. Back off on the power if the foam instantly vaporizes. Also back off on the power if the wire vibrates uncontrollably or spontaneously plays the theme from *Shaft*.
4. Don't bother trying to use wound strings or nylon strings. If you do, don't complain to me that your tool doesn't work.
5. This tool really works well in conjunction with the Styrofoam Shaping Fixture.

Click [HERE!] to go to the Construction Index

Hot wire foam cutting

Home > Amps, Volts, and Watts > Hot wire foam cutting

The foam cutting lathe

Here is a homebuilt foam turning lathe!! This is made from a window motor adapted and appropriately painted for the application. The pillow blocks that the rotating shaft bear in were made from foam patterns and cast using the above mentioned techniques. The two dials on the electrical box are light dimmers with simple numerical 10 through 100 markings for remembering settings. One is for the wire heat, the other controls motor speed. The object that is being turned on the lathe is a step pulley pattern. The picture below shows a similar pattern and a resulting pulley casting!

Foam cutting table and bow

Here I am cutting out a pillow block pattern for a lost foam casting. The paper stencil was designed using DeltaCad 3.2 and simply cut out with scissors. The curved rod is a 1/4-20 threaded rod with brass nuts to position the top wire terminal for varying cutting angles. It is a bit tricky to set it perfectly square with the cutting table. The transformer on the right is controlled by one of the light dimmers, center. The transformer is a modified microwave oven transformer with several taps for different lengths and sizes of cutting wire. The wire is not easily visible in the photo, it is a fairly fine wire, a violin "e" string.

Better view of foam cutting table

Note the knob for loosening the wire.

Pillow block template was made using DeltaCAD

Here the pattern is done except for the hole in the center for the shaft. To cut the hole, I loosen the knob at lower right to release the cutting wire. Then a reamer or punch is used to make a hole in the foam pattern, the cutting wire is fed through this hole, and re-tightened. The power is turned back on and the hole cut out. Then the wire is again released and the plug is removed from the hole. The pattern is ready to cast. Instead of making a core to form a hole in the casting, I simply put a 5/8" shaft through the hole and cast the metal right on it. After cooling, the shaft is driven out. This forms a nice smooth hole without ever machining it.

Step pulley pattern cut from foam

Notice the rough round foam blanks in the center background. These get glued together to form a blank large enough to turn a foam step pulley pattern from. Also, note the mold lines on the aluminum step pulley casting. This casting was not done with lost foam techniques, but by traditional molding techniques using a split foam pattern! Foam as you can see is a very versatile pattern material. It is, of course more fragile than wood and is harder to get a good surface finish like with wood patterns.

TECHIE STUFF !! (what you really came for...)

Now, here is the more technical notes concerning hot wire foam cutting techniques. These notes were inspired in part by email communications that I had with David Wimberley, the author of the David Wimberley Forge plans, available through Lindsay publications. (www.lindsaybks.com) David happened across this site sometime around August of 1999, and told me of his plans to begin experimenting with foam cutting. At that time, we had an inactive (coming soon) link that was bringing a few "foam cutting" hits, and after conversing at some length with him concerning this art, or sport, or whatever, decided it was time to address the matter.

Wire for hot wire cutting

First the wire. Any wire will do that can remain taut under heat. If the wire is low grade steel, for example galvanized picture wire, it won't last long because it gets soft with the heat -- even the low temp of foam cutting -- and snaps. David's choice of guitar wire is probably good. I have used stainless MIG welding wire, and I've used violin "e" string wire. I don't know what guitar wire is made of, but I do know that it is a very springy type of wire, and made to handle tension. I have used mandolin wire also (practically the same thing as guitar) and it worked quite well. The size of the wire is also noteworthy. The smaller wire diameter, the finer the cut you can make.

Schematic for dimmer, doorbell transformer foamcutter

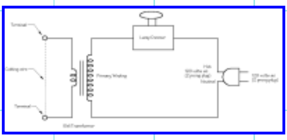

Power supply

Getting the power from your 110 volt receptacle to a suitable foam cutting format presents several problems. A standard light dimmer can be successfully used to vary the heat, but it can't heat the wire in a direct circuit. With a light dimmer powered by straight line current, you are taking a great risk of electric shock. Also, a guitar string is not going to be longer than about 2-3 feet (unless you get it bulk). But then how long of a wire are you planning to cut with? If the wire is too short (like only a foot or two) the light dimmer won't be able to go low enough and may self destruct from excessive current, or it may light the wire up orange hot and snap it.

What I recommend for a power supply is a bell transformer. They are available at your local Kmart, Walmart, or Home Depot for about 15 dollars, and are intended for doorbells. They put out 24 volts nominal, and they can be operated with most light dimmers to vary the current. I haven't found a light dimmer yet that doesn't vary a transformer. This despite the warnings that you shouldn't use a dimmer with a transformer. (But don't try to vary the speed of your ac-adapter powered tape recorder with this arrangement.) The bell transformer also isolates the resistance wire voltage from line current so that if you do come in contact with the wire or it's terminals that you aren't a short circuit to ground. Also, there's less voltage there to hurt you should you happen to touch both ends of the wire at once. I don't mean to be simplistic about safety, just extra cautious, as I am not a professional, but a hobbyist.

An alternative to bell transformers: I use transformers that come out of old power supplies for radios, office equipment, etc. These can have varying voltages, allowing for longer wires for cutting, etc. If you do end up needing a higher voltage for longer cuts, just gang up two or more bell transformers in series. Or, need more current? Gang them up in parallel. Just make sure you get the polarity right. No, transformers don't have a plus or minus, but when you have two windings (four wires) they do have polarity with respect to each other.

Wire Temperature

The cutting wire does not get red hot to cut foam. It does get hot enough to smoke, however. The power supply ideally should be capable of heating up the wire well above the cutting temperature, and the reason is covered here. Getting the wire red hot isn't all bad. I find that being able to heat the wire up well beyond cutting temperature is helpful in cleaning the wire. When the wire gets gummed up with residue, it can easily be cleaned by heating up the wire till it starts to smoke, then wipe a cloth over it and it comes nice and clean. The trouble with residue is that it leaves little blobs on the finished cut. However, getting the wire red hot takes the temper out of it, and too much red heat on your cutting wire will fatigue it and cause it to fail, possibly at an important stage of a complicated cut.

Cutting Speed

The speed that your cutting wire moves through the workpiece is noteworthy. If you try to cut too fast, the wire will make a distorted cut because it is pulled into an arc in the midsection of the workpiece. If you cut too slow, the wire will cause the foam to shrink back from the heat, and also droplets of melted foam will adhere to the wire and leave hard little knots in the surface of the cut. It is important to understand what the wire is doing as it cuts foam.

Some important events take place when the wire initially heats up, when you start into the workpiece, and when you come to a corner or a detail in your stencil. One thing I have discovered is that after you turn on your power supply and dial it to the desired heat setting, the wire has already gotten too hot. But that very same setting is too cold once you've cut an inch or two and cutting goes SLOW. This is a problem that I have been thinking about for sometime, and am on the verge of an invention with.

The Bow

Taut-hot-wire foam cutting requires some kind of bow, or hoop, or frame, to keep the wire tight and straight. These can be any thing your imagination can cook up. It should meet a few simple requirements, however, to make the technique as trouble free and practical as possible.

The bow needs to allow wiring or other system of electrical conduction to the wire, to heat it, of course.

The bow needs to exert some tension on the wire to keep it straight.

The bow needs to have sufficient throat to accommodate desired depth of cuts.

The bow needs to be able to be handled, or to be fixed to a stationary surface in such a way to allow the workpiece to be moved across it.

If you do much foam cutting, you will find that soon you have an array of bows, each for a slightly different type of cut. The bow that I prefer to use for small lost foam patterns has a table that keeps the workpiece square with the cutting wire. This allows nice square cuts, perpendicular to the flat surface of the foam sheet. The next section will cover shaped wire cuts, which have their own special type of wire holder, different from the bow in that it does not exert tension to the wire, but rather holds it in a fixed position, maintaining the intended shape of the wire.

Shaped Wire Cutting

This technique was employed in the making of the step pulley patterns. Here, stiff, heavy wire was bent into a shape that was to be applied to the workpiece: V-grooves. The factors that need to be considered here are the actual shape desired from the wire shape (they're not equal), and the cutting resistance of the foam. There may be other factors, as well. Almost any hot wire cut will show signs of the foam shrinking back from the hot wire. This may mean that in order to cut a 1/4" groove, you may need to bend up a wire shape that reflects more of a 3/16" groove. Bending wire shapes to cut a predetermined shape in foam is an art, and I have not mastered it, but have certainly had a lot of fun experimenting with it. That's all for now, folks!

Questions? Comments? Send me a note!

<<< Amps, Volts, and Watts - Previous | Next - Homebuilt arc welder >>>

Home | Aluminum Foundry | The New and Improved Lil' Bertha | Sand castings and patterns | Amps, Volts, and Watts | Hot wire foam cutting | Homebuilt arc welder | Homebuilt oscilloscope | Monster Quartz Halogen Bike Light | Induction Heating | Homebuilt Solid State Ignition Module | Lego Steam Engines | Single acting one cylinder | Double acting one cylinder | Double acting twin cylinder | Electricity generating turbine | Favorite Links | Email

Scripture Verse:
"Have not I commanded thee? Be strong and of a good courage; be not afraid, neither be thou dismayed: for the LORD thy God is with thee whithersoever thou goest. "
- Joshua 1:9

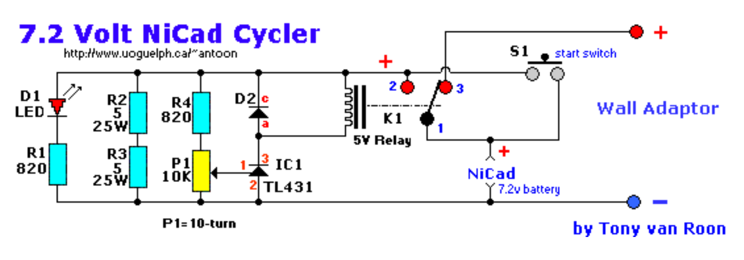

Table 1

Part	Description	Radio Shack #	DigiKey #	Notes
IC1	TL431(ILP) Motorola LM431 NTE999	n/a	296-1292-ND	Adj. Shunt Reg., TO-92
R1, R4	820 Ohm resistor		820QBK-ND	white red brown gold
R2, R3	5 ohm, 25W, WW			green brown brown gold
P1	10K trimmer		3292W-103-ND	10-turn
D1	LED, red	276-033		high brightness
D2	1N4001 diode	276-1101	1N4001DICT-ND	50V, 1A, rectifier
K1	5 volt relay	275-240		1-amp or better
S1	switch, momentary 'on'	275-1547		sub miniature

Technical Notes: This NiCad cycler is based on the Motorola Solid-State precision voltage reference device, TL431(ILP). The trip point can be set to 6.6 volt or whatever else you prefer for your 7.2 volt battery pack. Radio Shack can order this part in I was told. TL431ILP senses the preset voltage reference and trips the relay when that control voltage point is reached, adjusted with the 10-turn trimmer potentiomer, which in turn activates the charger. The resistors used in this circuit provide an approximate discharge rate of 250mA. Since the remainder of the circuits' power is also provided by the battery being discharged, an additional 50mA or so is discharged from the NiCad battery packs. The relay is configured as a latch so that once the unit trips from discharge to charge, the unit cannot be recycled until the start switch is pressed again. The component values, setting up the discharge value and trip poins can be adjusted to handle any size or battery voltage up to the 30 volt maximum rating of the TL431. Remember, the relay coil voltage must also be taken into consideration when changing the operating voltage of the circuit. All components listed in the circuit can be easily obtained from your local electronics store or Tandy/Radio Shack, although the TL431 may have to be ordered in. If you find a significant drop in discharge time you have a clue that something is going bad with your pack and close examination or a new purchase may be needed.

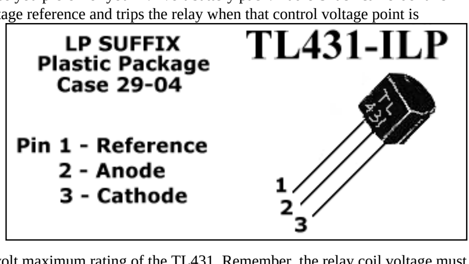

R2 and R3 are preferable wire-wound resistors

Description and Calibration: When you have completed building the cycler, go back and make sure that all your connections are soldered solidly and that all connections are correct. If you're not sure, try to get help from someone with electronics experience. Although highly unlikely, it is possible to destroy the TL431 by reversing the positive/negative connections so try to make sure this particular device is hooked up correctly. Take your time checking your wiring and connections; the last thing you want is damage to your charger.
To calibrate this unit you need an adjustable power supply since the 7.2 volts cannot be obtained with the regular 1.5 volt dry cells. You can easily construct the one listed here very cheap, with parts you may already have in your parts box, and keep it for future calibration of the cycler circuit if you ever have to replace a component.
A NiCad battery pack will also not work for this step in the process. You need an adjustable Power Supply and set the voltage to about 7 volts.
Your goal in calibrating the cycler is to adjust the trimmer in such a way that the unit will change from 'discharge' to 'charge' when the cells reach 1.1 volts per cell, which will mount to 6.6 volts total.
Preset the trimmer control all the way to one end. If you followed the the parts list above you will have about 10-turns to go from one end to the other, and believe me, with a regular trimpot adjusting the cycler is almost impossible. A 10-turn trimmer is a necessity!
The power supply, at 7 volt, is just above the voltage you want the receiver pack to change over from 'cycle' to 'charge'. Connect the power supply across the receiver battery leads of the cycler. Press and release the start button. If the LED lights and stays lit, turn the control all the way to the other end, and repeat the step above. Now turn the trimmer otentiometer back 1/8 turn, in the opposite direction you turned it to get the LED to go off. Press and release the start button one more time. IF the LED stays on, the receiver battery adjustment portion of the cycler is complete. If the LED still goes out, turn the trimmer an additional 1/8 turn back. Now the LED shoud stay lit when the start button is pressed and released. If it does not, or the relay seems to 'rattle' when you press the start button recheck your wiring; something is not connected right.
What exactly should that trigger-level be, you may ask? It should be the set-point where *you* wish to start the charge-cycle. At 1.1volt/cell that would be 6.6 volt. You may like it a bit higher like 6.8volt (1.13 volt/cell). So what you do is you keep adjusting the trimpot until it starts the 'charge' cycle at 6.8volts. Easy huh? Mine is set for 0.9 volt/cell which is not recommended for all nicad batteries and is definately not for the faint of heart. My packs are over 8 years old and still going strong. I cycle all my nicads once a month, no matter if I use(d) them or not.

CAUTION: Do NOT plug your wall charger in during the calibration procedure. It should only be plugged in when the NiCad is connected to the cycler!
Once you completed the adjustments, connect your fully charged NiCad pack to the cycler. Plug in the wall charger. The LED on your wall charger should be on indicating the pack are being charged. If not, check your wiring again. Now press and release the start button. The Led on the cycler should go on and the led on the wall charger go out. This state indicates your battery pack being 'discharged'. When the led on the wall charger is on, the battery is being charged. About 16-hours after the cycler has switched from discharge to charge, your battery pack is ready for use.
Remember, you **must** allow the battery pack to fully charge before flying. I don't need to remind you to check the battery voltage with your expanded scale voltmeter *before* each flight.
Also note that the adjustment can be bit tricky, so just take your time and be ***patient.***

Most 7.2 volt NiCads should not be "slow-charged". They should always be fast-charged (if so noted on the pack) to maintain their power/current drain for fast and optimum performance. See some primers on NiCads. I use a 9-volt -1200mA adapter from an old answering machine. Use anything you have laying around but not to exceed 9 or 10Volt-DC and not less than 500mA.
The TL431 looks like an ordinairy transistor but it is not; the TL431 is a "precision voltage reference" IC (Integrated Circuit).

The phone number for DigiKey is 1-800-Digi-Key.

Back to Gadgets Menu page

Airtronics (AM/FM) Trainer Cord

by Tony van Roon

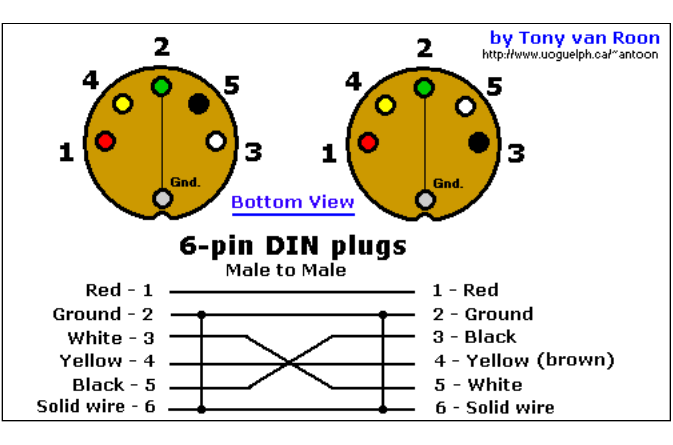

Additional Notes:

1 - Pin 3 (white) and Pin 5 (black) are crossed. D.I.N. is a european 'standard' originating from Germany. The D.I.N. abbreviation stands for "Deutshe Industrie Norm".

2 - Pin 2 (ground) can be any color but is usual green.

3 - In some 5-wire cable the color yellow is replaced by brown.

4 - If your trainer cord does not work, try reversing the black and white wire again. (one plug only!)

Back to R/C Gadgets page

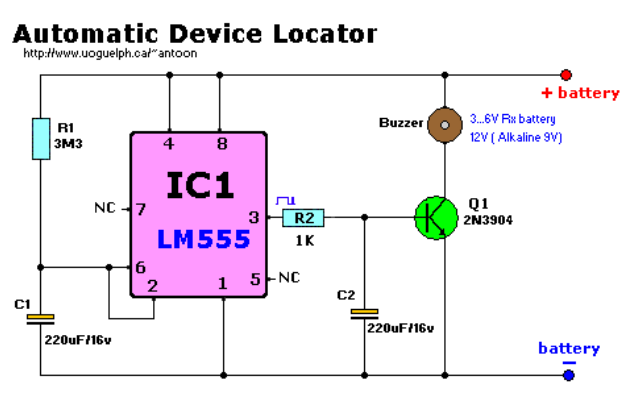

Delay is set for about 12 minutes @ 5v with components shown.
Increase R1 for use with 9v battery.

Table 1

Part	Description	Radio Shack	Digi Key	Notes
IC1	LM555 timer/oscillator	276-1723		NE555, etc.
Q1	2N3904 transistor			NPN-50V-150mA
R1*	3M3 resistor		3M3QBK-ND	orange orange green gold
R2	1K resistor		1KQBK-ND	brown black red gold
C1*	220µF, 16V capacitor			electrolytic (see text)
C2	220µF, 16V capacitor			electrolytic

A Couple of Final Notes:

o All partnumbers are Radio Shack/Tandy or DigiKey unless otherwise indicated.

o All resistors are minimum 5%, 1/4 watt, carbon, unless otherwise indicated. It's okay to use metal film or other precision types. 3M3(R1) is the same as 3.3M

o With this circuit you can find your aircraft easily in high grass, corn fields, soybeans or whatever. As soon as you power on your receiver the timer will start to count down.

o If you power the unit via the receiver battery, make sure to purchase a 3 - 6 volt buzzer! Remember that in the case of a crash (heaven forbid!) the receiver may loose its power from the battery pack because of the force of impact. It would be safer to provide the ADL with a 9-volt Alkaline battery + on/off switch and wrap the whole thing in 1/4" SIG latex rubber.

o The timer, with the components shown above, goes off in about 18 minutes at 9-volt. To increase the delay, increase the value of ***R1***. Also, R1 could be made adjustable with a 5-Mega-ohm trimpot of the proper wattage.

o A CMOS version of the **555** timer is available (**MC1455P1**), and preferred, which will cut the powerdrain on battery powered circuits. The MC1455P1 is pin-compatible with the NE555, and most other 555 chips. C1 and C2 are electrolytic capacitors (or tantalum) so watch the '+' and '-' orientation. T1 (2N3904) can be most any substitute so it's not critical; just watch the position of the emitter/collector as some european type have them reversed (like the BC types).

o The ADL can be used for all forms of R/C equipment, the only thing needed may be to adjust the delay to tailor your needs.

o This device is tested for interference with JR, Futaba, HiTec, Airtronics, Hobbico, and ACE radio equipment. None were found and none are expected when used with other brands of Radio equipment.

Back to Gadgets Menu

R/C Auto Pilot Project

Have you ever wanted to simply tell your R/C vehicle where to go and simply let it do the rest.

The R/C Auto Pilot Project allows you to do this. It uses a standard GPS's waypoints to navigate a R/C vehicle to either a "Goto" waypoint or it can follow a "Route" of waypoints. It can be used inside of a plane, car, truck, boat or even a robot.

The GPS unit needs to support NMEA at 4800 baud (a standard that most GPSs do support). You connect it to the RCAP using a serial data cable. If you are looking to make your own cable, take a look at http://pfranc.com/. I highly recommend them for Garmin GPS connectors.

The RCAP uses four standard R/C leads to connect to your R/C receiver and battery. Two male leads to connect to two channels of your R/C receiver, one to activate the RCAP the other to pass through the normal signal from your R/C radio while the autopilot is not activated. A third lead (female) from the RCAP connects to a servo to steer your vehicle. The final female lead is used to connect to the battery.

Once a waypoint is activated on your GPS, it will start sending data to the RCAP. (Meaning you MUST have a Goto or Route active at all times on the GPS for the RCAP to function properly when activated). The RCAP will ignore this data and simply pass through your R/C radios instructions while it is not activated. Once activated, by using a spare switch on your R/C radio (gear switch for example) it will then read in the $GPRMB and $GPRMC sentences from your GPS to determine the heading needed to remain on course for the currently active waypoint.

There are 3 adjustments that need to be set on the RCAP.

- Servo direction.
- Max. servo travel
- Course correction gain

Servo direction (slide switch S1) simply allows you to reverse the direction a servo turns while the RCAP is activated. You should test this out before actually putting the RCAP into your vehicle to make sure it matches the expected response.

Max Servo Travel (Variable resistor R2) allows you to set a maximum end point that you will allow a servo to travel. This is especially important when installing the RCAP into an aircraft. I recommend starting with a minimal setting and increasing it slowly.

Course Correction Gain (Variable resistor R3) allows you to adjust how aggressively you want to RCAP to remain on course. A low setting means that the RCAP will slowly turn toward the current course. A high setting will have the turns perform much quicker. The amount of correction used is also proportional to the amount off course the vehicle is, the greater the amount off course, the greater the correction is. I would recommend starting with a minimal setting and increasing it slowly.

The RCAP needs it's own power source of 6V. A 5-cell R/C receiver battery works well. I will be testing some 2-cell lithium ion polymere batteries shortly and will report on its use in the discussion forums at http://groups.yahoo.com/group/rcpilot/.

When using the RCAP inside of an aircraft, the recommended method would be connecting the planes rudder to the RCAP. An additional method of stabilizing the plane is needed as well. RCAP has been tested with Futaba's PA-1 and FMA Co-Pilot. Both of these work well with RCAP. Please ensure the method used for correcting your planes stabilization has been tested before installing the RCAP.

Building the RCAP

You may obtain all the necessary files in one of two ways.
You can download a complete archive of version 1.1.
or you may browse the CVS repository at SourceForge

The RCAP is based on MicroChip's PIC series of microcontrollers. It uses the PIC16F876.

You need to either compile the code using Micro Engineering Lab's PicBasic Pro or download the HEX file and burn the micrcocontroller using a PIC programmer that can program 28 pin PICs.

A pre-programmed microcontroller is also available at
http://www.rconline.ca/catalog/product_info.php?products_id=122

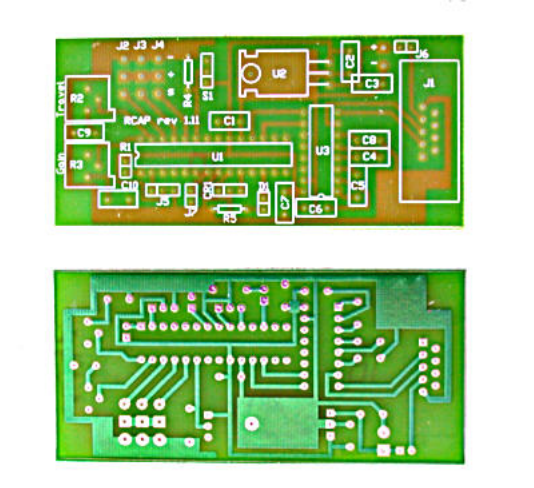

Next you will need to make a printed circuit board.

You may either use the .PCB file found in the circuit folder or the bw-art file. The .PCB file is in Traxmaker format.

A professionally produced PCB is also available at
http://www.rconline.ca/catalog/product_info.php?products_id=123

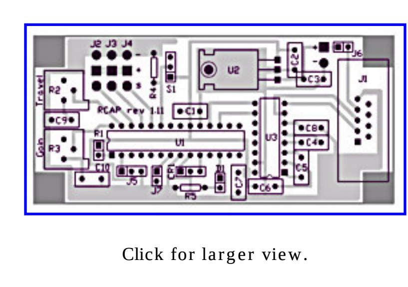

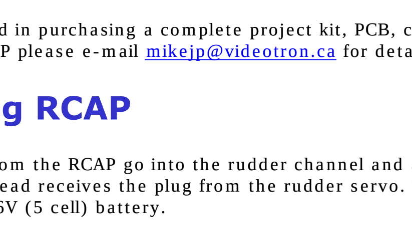

The rest simply involves soldering the correct components into place.

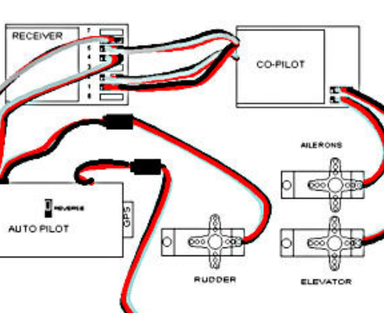

Click for larger view.

If you are interested in purchasing a complete project kit, PCB, case, components or a pre-assembled RCAP please e-mail mikejp@videotron.ca for details.

Connecting RCAP

The 2 male leads from the RCAP go into the rudder channel and an auxiliary channel. The 3-wire female lead receives the plug from the rudder servo. The 2-wire female lead connects to a 6V (5 cell) battery.

Automatic 9-Volt Nicad Charger

by Jan Hamer

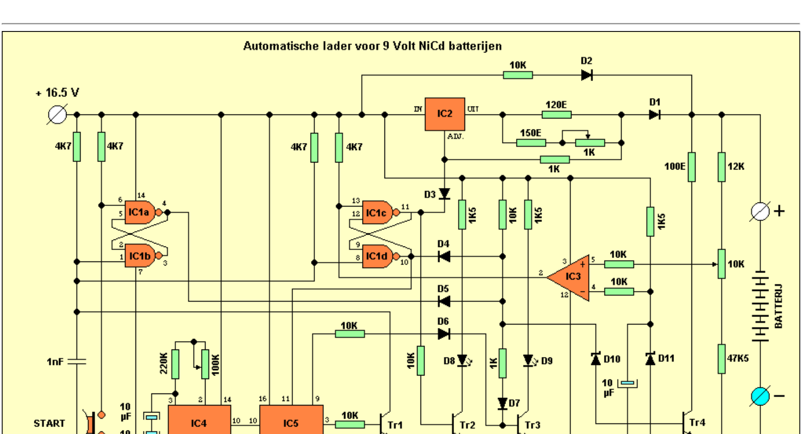

Published with permission of B.J.G. 'Jan' Hamer, the Netherlands
Go to Jan's website
Comments, or questions to: Jan Hamer

Back to Gadgets Menu page

9V Backup Power for R/C Aircraft

by Tony van Roon

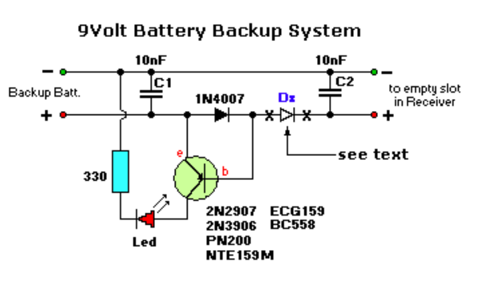

A Couple Notes:
You will need a 1N4007 Diode, a (General Purpose) PNP transistor, two ceramic capacitors, switch harness, buzzer, and a small amount of Vero Board, or you can make a pcb! Its up to you. Replacement values for the BC558 are NTE159, ECG159, etc.
CAUTION: If you use the replacements, watch the orientation of collector/emitter, since it may be reversed from the european format (example: BC558=CBE, NTE159=EBC).

Diode(s) **Dx** is the place where you insert as many diodes as needed (even schottky) to obtain the required voltage drop. For a 9-volt alkaline battery that is about 5 diodes. 6 x 0.7 = 4.2V. 9 - 4.2 = 4.8V which is the voltage drop when the backup is switched on and so more than adequate.
D1 must be a silicon type only because the voltage drop of a schottky type is too low for Q1.

To test the backup battery, you simply switch the backup battery on, and the Led should be lit. You should have power to the receiver via the diode. Then switch on the main battery, and the Led goes off. This indicates that the main battery is ok. Should you land, and the red Led is on, then you are running on the backup battery, and it's time to go home.
The two capacitors absorb possible micro-spikes; C1 is extra protection and may not be needed depending on the quality of your receiver. However, it cost almost nothing and does no harm.\

TEST THE CIRCUIT before hooking it up to your (expensive) receiver!

Back to Gadgets page

Receiver Backup Power

by Tony van Roon

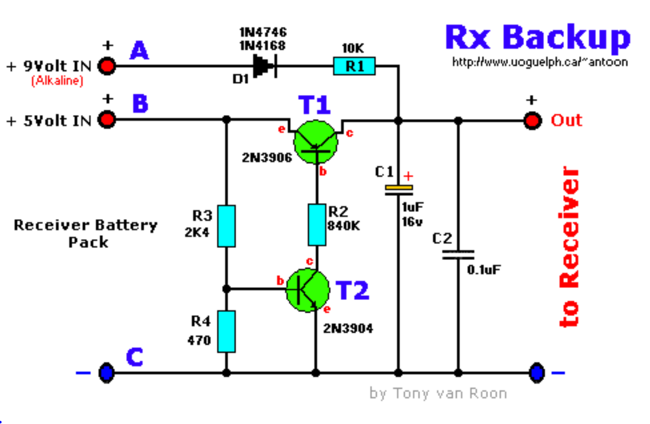

Parts List:

R1 = 10K
R2 = 840K
R3 = 2K4
R4 = 470 ohm
D1 = 1N4168, 1N4746, or NTE5077A. 18V Zener, glass-type
C1 = 1uF/25v, Tantalum
C2 = 0.1uF (100nF), ceramic
T1 = 2N3906, PNP, AF/RF Amp (NTE159)
T2 = 2N3904, NPN, RF Amp/Switch (NTE123AP)

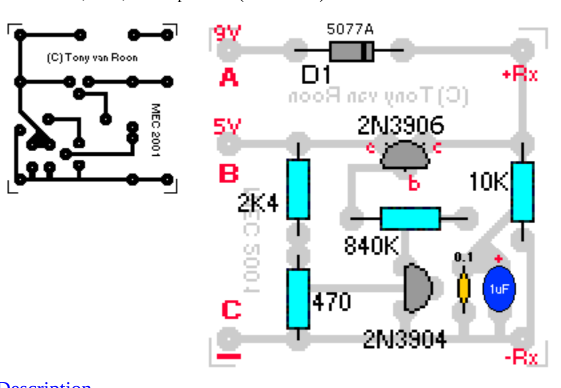

Description

You will also need a 9v battery + battery clip. Nicad or Alkaline works fine. Keep in mind that the so-called '9-volt' NiCad battery does not actually contain 9-volts but rather between 7.6 and 8volts. Adjust R1 to 8K2 if you are using the 9-volt NiCad type. For backup power the normal 9volt Alkaline battery is just fine. A PCB is provided but not really necessary since this circuit can easily be built on vero-board or the 'Experimenters PCB' from Radio Shack.

As long as there is enough power supplied to the +Vcc input, T1 and T2 are biased and filter out to '+ Out' while blocking the 9-volt via D1 and R1. The purpose of R1 is only to bring the 9-volt to an acceptable voltage-level for the receiver. When the battery-pack gets below 4.8V, the voltage divider over T2 will be reversed biased and make T1 block the '+Vcc In'. This will allow D1 via R1 to bias and provide the necessary backup power. For T1, a NTE129 may work also. One more thing about T2, the replacement type is NTE123**AP**. The regular 'A' type will not work.

In the event you are unable to obtain the transistors above, I have included a second version (below) for either a second 4.8V battery pack or 9V battery.

NO MATTER WHAT YOU PLUG INTO YOUR RECEIVER, TEST IT FIRST!

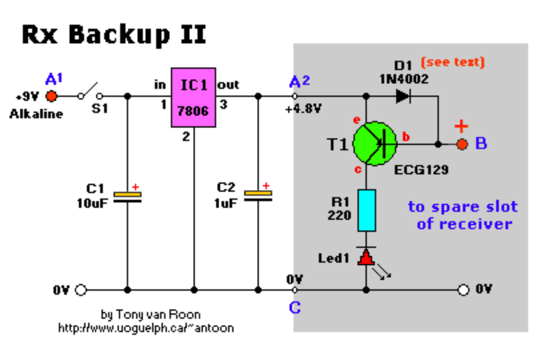

Parts List:

R1 = 100 - 220 Ohm
D1 = 1N4002 (see text)
C1 = 10uF/25v
C2 = 1uF/16V
Led1 = LED, 5mm, Ultra or High Brightness
T1 = ECG129 or NTE129, PNP
IC1 = 7806 Positive Voltage Regular (see text)

Description

This circuit is very simple and works just as good with a minimum of components. If you wish to use a 9-Volt Alkaline battery you just build the whole circuit as shown. If you wish to use it with a second 4.8 battery back, you can eliminate C1, C2 and IC1 and go directly to the circuit in the gray-shaded area.
The backup-battery starts to activate when the main battery pack falls below 4.7 volt, and provides full power at 4.6 volt. This fact is indicated by the illumination of Led1 via R1. Depending on the type of LED you're using, you may need to experiment with the value of R1. The Ultra-Bright LED I'm using required a 220-ohm resistor for R1. Select a value anywhere between 100 - 330 ohm.
You can use a 3-volt buzzer also instead, just replace Led1 & R1 with the buzzer. Another diode and capacitor may be needed over the '+' and '-' of the buzzer to filter out transients. A 1N4148 diode and a 100nF ceramic capacitor will most likely be sufficient. I personally favor the high brightness Led since I fly helicopter and wouldn't be able to hear the buzzer anyway. Your choice.

In regards to transistor T1, which is a general purpose fast-switch/driver; the ECG129/NTE129 worked fine. I noticed while experimenting that not all transistors behave the same in regards to activating the backup-battery at a certain voltage level. Any PNP fast-switch type will probably work. Check ECG & NTE for reference information.
The IC1 regulator is a 6-volt type in a TO-220 case. The general purpose 1N4002 (D1) takes a voltage drop of 0.7V making the output a total of 5.3V. Okay for most receivers but check yourself. Some receivers have a max of 5V. If your receiver can handle 6 volt, change D1 for a schottky diode which has a lower voltage drop.

The 9-volt Alkaline battery is connected between the 'A1' point and '0' volt. A regular 4.8 volt battery pack is connected to 'A2' and '0' volt and components not shown in the gray-shaded area eliminated. Point 'B' and '0' volt goes into a spare slot of your receiver.
To check the working of your backup circuit, make sure both the main and backup packs are plugged into the receiver. If you swith the main battery pack off (via the switch harness) the led will light and indicate that 'backup is provided'. Ofcourse, you should have another swith for the backup battery otherwise your receiver would be always 'on'.

Because of the simplicity of this circuit, there is no need for a circuit board. Use vero-board or something.

AGAIN -- NO MATTER WHAT YOU PLUG INTO YOUR RECEIVER, TEST IT FIRST!

Back to Gadgets Menu page

NiCad Battery Cycler
for Rx & Tx

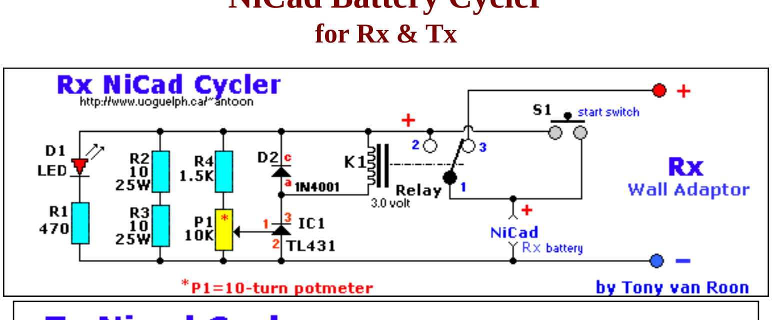

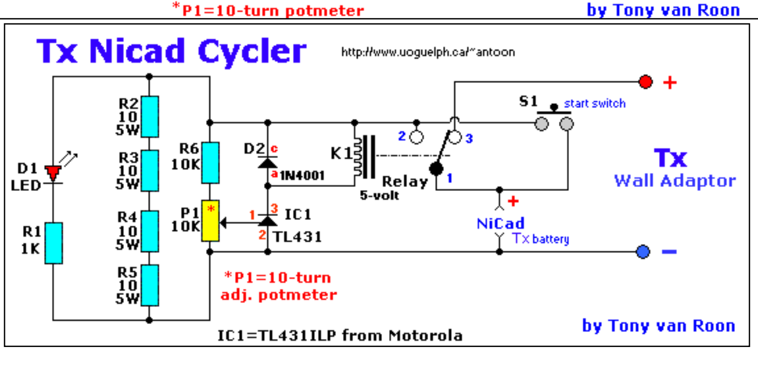

Receiver

Part	Description	Radio Shack	Digi Key	Notes
IC1	TL431ILP, Motorola LM431 NTE999	n/a	296-1292-ND	Prec. Voltage Ref.
D1, LED	Light Emimting diode		P374-ND	5mm, red
D2	1N4001, diode		1N4001DICT-ND	Gen. Purp. Rec.
R1	470 ohm, resistor	271-1317		5%, 1/4W, carbon
R2/R3	10 ohm, resistor	271-132		5%, 25W, WW
R4	1.5K, resistor			5%, 1/4W, carbon
P1	10K, trimmer-pot			10-turn, Bourns
K1	5V-1A, relay	275-240 (5V)		submin., 3V preferred
S1	SPST, switch	275-8077		momentary 'on'

Transmitter

Part	Description	Radio Shack	Digi Key	Notes
IC1	TL431ILP, Motorola	n/a	296-1292-ND	Prec. Voltage Ref.
D1, LED	Light Emimting diode		P374-ND	5mm, red
D2	1N4001, diode		1N4001DICT-ND	Gen. Purp. Rec.
R1	1K, resistor	271-1321		5%, 1/4W, carbon
R2/R3	10 ohm, resistor	271-132		5%, 5W, WW
R4/R5	10 ohm, resistor	271-132		5%, 5W, WW
R6	10K, resistor	271-1335		5%, 1/4W, carbon
P1	10K, trimmer-pot			10-turn, Bourns
K1	7V-2A, relay	275-005 (7V)		submin., 5V preferred
S1	SPST, switch	275-8077		momentary 'on'

Technical Notes: This NiCad cycler is based on the Motorola Solid-State precision voltage reference device, TL431(ILP). The trip point (adjustable with P1 for both units) can be set to 4.4volt for the receiver pack and 8.8volt for the transmitter pack or whatever else you prefer as trip-point for your battery packs. Radio Shack can order this part in I was told.

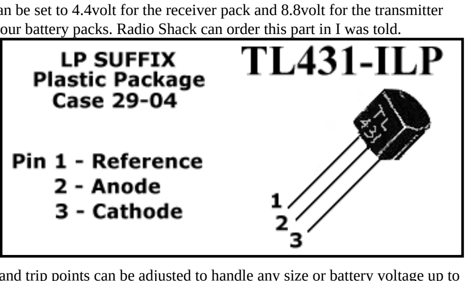

TL431ILP senses the preset voltage reference and trips the relay when that control voltage point is reached, adjusted with the 10-turn trimmer pots, which in turn activates the charger. The resistors used int this circuit provide an approximate discharge rate of 250mA. Since the remainder of the circuits power is also provided by the battery being discharged, an additional 50mA or so is discharged from the NiCad battery packs. The relay is configured as latch so that once the unit trips from discharge to charge, the unit cannot be recycled until the start switch is pressed. The component values, setting up the discharge values and trip points can be adjusted to handle any size or battery voltage up to the 30 volt maximum rating of the TL431. Remember, the relay coil voltage must also be taken into consideration when changing the operating voltage of the circuit. All components listed in the circuit can be easily obtained from your local electronics store or Tandy/Radio Shack, although the TL431 may have to be ordered in. If you find a significant drop in discharge time you have a clue that something is going bad with your pack and close examination or a new purchase may be needed.

Description and Calibration: When you have completed building the cycler, go back and make sure that all your connections are soldered solidly and that all connections are correct. If you're not sure, try to get help from someone with electronics experience. Although highly unlikely, it is possible to destroy the TL431 by reversing the positive/negative connections so try to make sure this particular device is hooked up correctly. Take your time checking your wiring and connections; the last thing you want is damage to your charger.
To calibrate this unit you need 6 regular (1.5v) dry cells, it does not matter what size they are, AA, C or D cells are all good. Just make sure they are **new**. NiCads will not work for this step in the process. [I used an adjustable Power Supply instead since I can simulate depletion of a battery pack, by adjusting the voltage, to the point I prefer the relais to trip.]
Your goal in calibrating the cycler is to adjust the trimmer pots in such a way that the unit will change from 'discharge' to 'charge' when the cells reach 1.1 volts per cell. On the receiver battery pack this will be 4.4 volts. On the transmitter pack this is 8.8 volt.
Preset the trimmer controls all the way to one end. If you followed the the parts list above you will have about 10-turns to go from one end to the other, and believe me, with the regular trimpot adjusting the cycler is almost impossible. A 10-turn trimmer is a necessity!
Okay, on with it. Connect 3 of the dry cells in series, giving you 4.5 volts total. This is just above the voltage you want the receiver pack to change over from 'cycle' to 'charge'. Connect the dry cell combination across the receiver battery leads of the cycler. Press and release the start button. If the LED lights and stays lit, turn the control all the way to the other end, and repeat the step above. Not turn the trimmer potentiometer back 1/8 turn, in the opposite direction you turned it to get the LED to go off. Press and release the start button one more time. IF the LED stays on, the receiver battery adjustment portion of the cycler is complete. If the LED still goes out, turn the trimmer an additional 1/8 turn back. Now the LED shoud stay lit when the start button is pressed and released. If it does not, or the relay seems to 'rattle' when you press the start button recheck your wiring; something is not connected right.

For the transmitter section of the cycler use the same calibration method as described above but now use all 6 cells. At 1.5volts per cell this will add to 9 volts and again is just above the 8.8 volt trip level to change over from cycle to charge.
CAUTION: Do NOT plug your wall charger in during the calibration procedure. It should only be plugged in when the NiCads are connected to the cycler!
Once you completed the adjustments, connect your fully charged NiCad packs to the cycler. Plug in the wall charger. The LED's on your wall charger shoul be on indicating the packs are being charged. If not, check your wiring again. Now press and release the start button. The Led's on the cycler should go on and the led's on the wall charger go out. This state indicates your battery packs being 'discharged'. When the led's on the wall charger are on, the batteries are being charged. About 16-hours after the cycler has switched from discharge to charge, your batteries are ready for use.
Remember, you **must** allow the batteries to fully charge before flying. I don't need to remind you to check the battery voltage with your expanded scale voltmeter *before* each flight.
Also note that the adjustments can be bit tricky, more so for the Rx part and especially if you're using a 5 volt relay for the receiver part, a 3 volt relay is much easier to work with. So just take your time and be ***patient.***

Personal note: If you have problems with the relay actuation (RX only), try a different relay, like the prefered 3.0 volt type instead. The TL431 drawing is shown front-view. My personal settings for the treshold cut-off is for Rx @ 3.8volt and Tx @ 7.6volt, which is 0.95volt-per-cell. I like to 'deep-cycle' the battery packs. Why? For the simple reason that as soon as the the treshold is reached the charge cycle starts so there is absolutely no harm done. I have used this cycler for 8 years and combined the rx/tx in a 3"x4"x1.5" plastic case. I cycle once per month no matter if I fly or not.

Back to Gadgets Menu page

Make a Constant Current Nicad Charger
by Pete Christensen

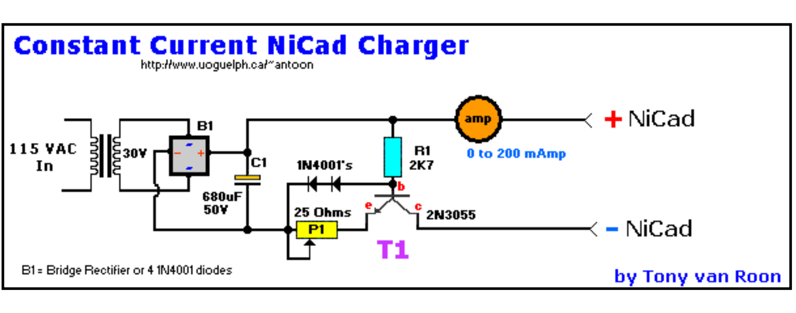

Parts List

- o Bridge Rectifier or four 1N4001 diodes
- o Transformer, 117V/30V & 500mA
- o D1/D2 (near 'b' of transistor), 1N4001
- o Transistor, 2N3055
- o Resistor, 2.7K
- o Capacitor, 470 to 680 microFarad
- o Adjustable potmeter, 20 to 25 ohms
- o Meter, 0 to 200 mA (or use your multimeter)

The schematic for this charger is pretty simple. You can charge from 1 to 20 +/- nicads at a constant current of from 20 to 200 ma +/-. The circuit I modified from an article in July 1977 "73 Amateur Radio Magazine". The transformer can be anything from 24 volts (lower volts=fewer cells charged) up to 30 or so volts. The more volts the more cells you can charge. All diodes are 1N4001 or similar. The cap can be most anything around 500uf or greater. The meter can be any ammeter if you wind your own shunt. I've built and used 2 or them for years. Good luck!

Pete Christensen

Back to Gadgets Menu page

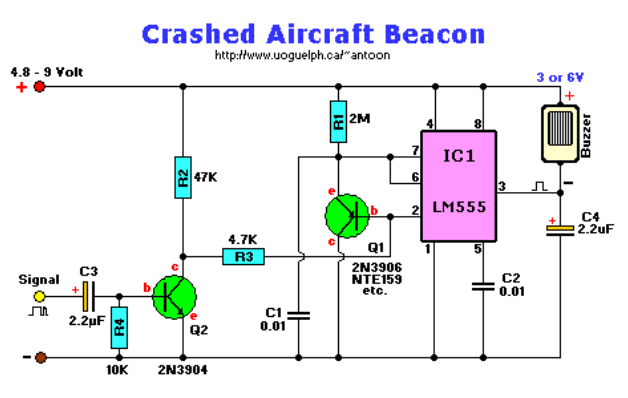

Parts List:

```
R1 = 2M       C1,C2 = 0.01µF (10nF), Ceramic
R2 = 47K      C3,C4 = 2.2µF, Tantalum (or electrolytic)
R3 = 4.7K        Q1 = NTE159, ECG159, PN200, *BC557(a), 2N3906, etc.
R4 = 10K         Q2 = NTE123AP, ECG123AP, PN100, *BC547(a), 2N3904, etc.
U1 = LM555
```

U1, the timer/oscillator IC, **LM555, NE555,** SE555(c), NTE955, ECG955, etc.
The CMOS version of this IC **(MC1455P)** uses only 1/10th the current!).
3 volt buzzer, servo connector to fit your receiver pack (optional).

Final Notes:

Most every R/C'er knows how hard it is to find a crashed or downed plane in high grass, thick brush, corn or soy fields. Many aircraft are probably still laying there waiting to be found. This circuit will help you to find your aircraft/rocket easily. It is easy to build and does not require special parts. Using replacements is just fine. If you opt for a seperate 9-volt battery (don't forget an on/off switch) the buzzer should be approx. 6-volt. Do *NOT* connect the + of the 9-volt battery to your receiver! Serious damage will occur! In my prototype I put silicon gel arround all the electronic components, immediately put the hole thing in heat-shrink and left to dry overnight. It now is vibration-proof. The circuit was still working when my Goldberg Falcon Mark III folded the wings from a height of about 400 feet and slammed into the ground (at full trottle) and dug itself in almost 6 inches deep.

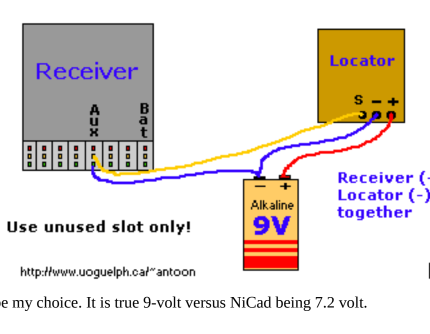

Fig. 2

Just in case you're wondering how to hookup the 9-volt alkaline battery: Fig. 2
The negative (-) of the 9-volt battery and the rx-battery pack are tied together. Keep in mind, if you hookup the battery incorrectly you may damage your receiver, so be careful. Can you use the receiver's battery power? Yes ofcourse. It will just drain your receiver battery a lot faster. If you are into slope soaring, gliders, or any other area of R/C with long-duration of your radio/receiver batteries, I strongly recommend to use a seperate 9 volt battery. To save on weight, NiMH would be my choice. It is true 9-volt versus NiCad being 7.2 volt.

A transmitter provides every 20 milliseconds a set of pulses, which in turn sends your receiver a seperate pulse to each of the servos at the same interval. The circuit above is a so-called ***missing-pulse-detector.*** An alarm will sound when your receiver no longer receives the set of pulses from your radio. So, to locate your aircraft, all you have to do is switch your transmitter off and the locator will start to beep. Easy huh? If you wish, you may even use point-to-wiring on vero board or something. The tantalum capacitors are polarized so watch the + and - sides. This circuit works best when just plugged into an empty position of the Receiver. I do not use the 9-volt battery setup myself, since I only fly 15 minutes with my heli at a time.
If you need more information and data on the 555 timer/oscillator IC, click **NE555** here.

***CAUTION:** The European BCxxx type transistors have their emitter/collector reversed in most cases. Check for proper pinout first to make sure it is so.

This device is tested for interference with JR, Futaba, HiTec, Airtronics, and ACE radio equipment. None were found and none are expected when used with other brands of Radio equipment.

Back to Gadgets Menu page

NiCad Discharger for Tx & Rx Packs

by John Nooyen

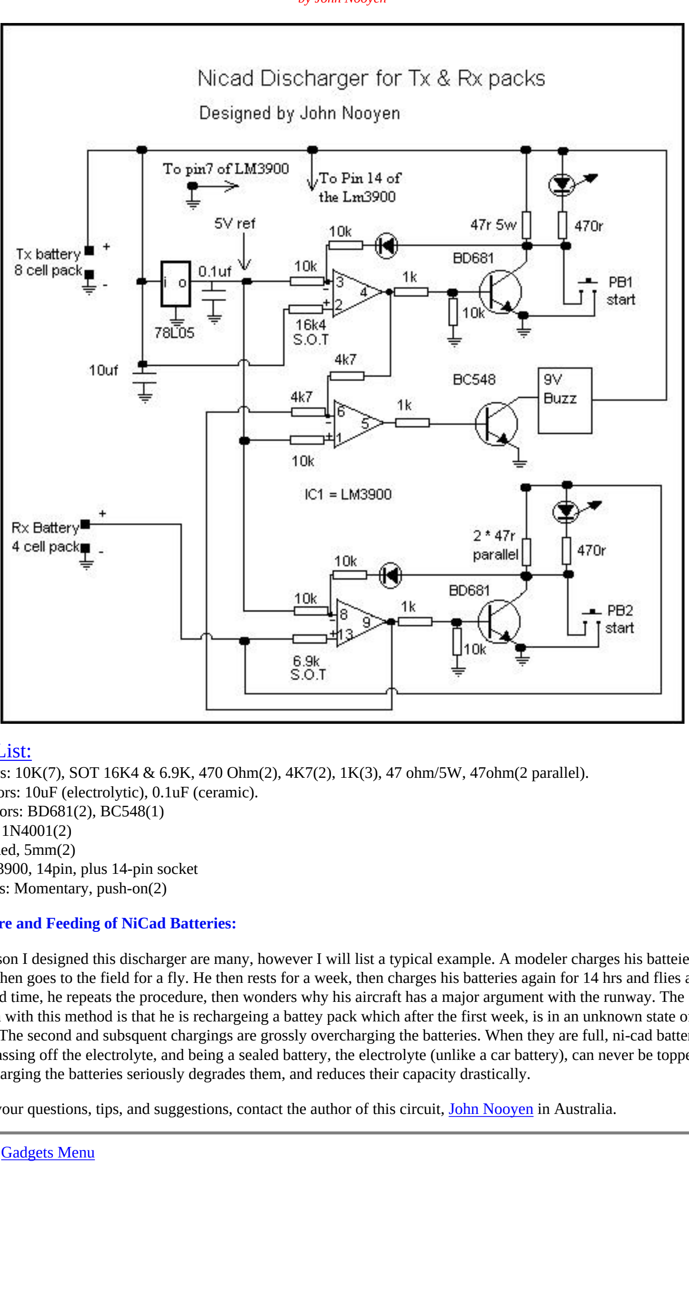

Parts List:

Resistors: 10K(7), SOT 16K4 & 6.9K, 470 Ohm(2), 4K7(2), 1K(3), 47 ohm/5W, 47ohm(2 parallel).
Capacitors: 10uF (electrolytic), 0.1uF (ceramic).
Transistors: BD681(2), BC548(1)
Diodes: 1N4001(2)
Led's: Red, 5mm(2)
IC: LM3900, 14pin, plus 14-pin socket
Switches: Momentary, push-on(2)

The Care and Feeding of NiCad Batteries:

The reason I designed this discharger are many, however I will list a typical example. A modeler charges his batteies for 14 hrs, then goes to the field for a fly. He then rests for a week, then charges his batteries again for 14 hrs and flies again. The third time, he repeats the procedure, then wonders why his aircraft has a major argument with the runway. The problem with this method is that he is rechargeing a battey pack which after the first week, is in an unknown state of charge. The second and subsquent chargings are grossly overcharging the batteries. When they are full, ni-cad batteries begin gassing off the electrolyte, and being a sealed battery, the electrolyte (unlike a car battery), can never be topped up. Over-charging the batteries seriously degrades them, and reduces their capacity drastically.

For all your questions, tips, and suggestions, contact the author of this circuit, John Nooyen in Australia.

Back to Gadgets Menu

Elevon Mixer for Transmitters

by John Nooyen

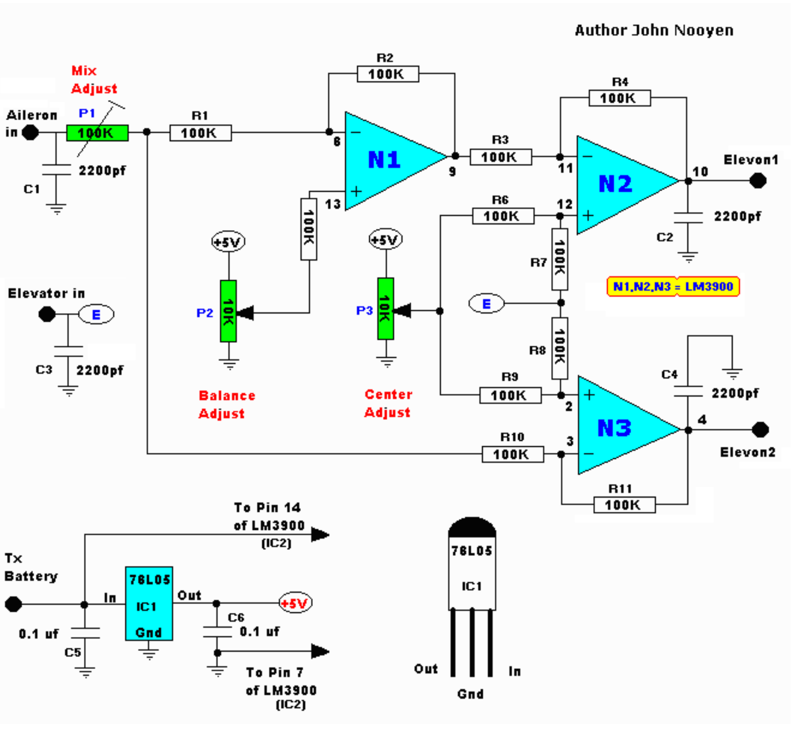

Electronic Mixer for transmitters

This elevon mixer is designed to be used in transmitters which use an encoder IC. (NOT Flip Flop stages).

If the encoder IC uses DC voltage levels on its input pins to change the output pulse train, then this mixer will be suitable.

You can setup the mixer by hooking potentiometers between 5V and Ground, and the wipers to the inputs. The mixing ratio, and balance can then be roughly adjusted, using a voltmeter, and the unit tested, before installing the unit in the Transmitter. Space can sometimes be at a premium, so mount the mixer carefuly. The LM3900 is a single supply, Quad Operational Amplifier.
Pins 1, 5, & 6, which belong to the 4th op-amp, are not used. Use them as a spare.

Below I have redrawn John's schematic in another way, hopefully it will help you to solder a circuit together. I'm working on a Printed Circuit Board for the Elevon Mixer. Available sometime in the future.
For all your questions, tips, and suggestions, contact the author of this circuit via his website. John Nooyen's Webpage in Australia. Or via his email address at the top of this page.

Back to Gadgets Menu

Back and Forth Flasher

by Tony van Roon

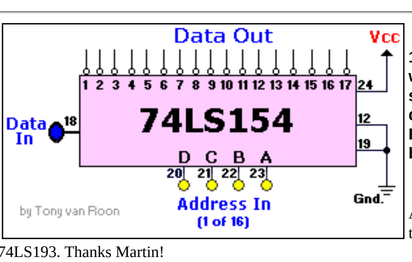

1-to-16 Demultiplexer - Selected output is low when Data IN is low. If Data IN is high, then selected output is high also. Each 4-bit address drives one output low. All others stay high. Enable inputs (E1 & E2) must be low. If one or both are high, all inputs *go* low.

An error was found by Martin in regards to two pin 3's on the 74LS193. Corrected! Pin 6(7400) goes to pin 5 of the 74LS193. Thanks Martin!

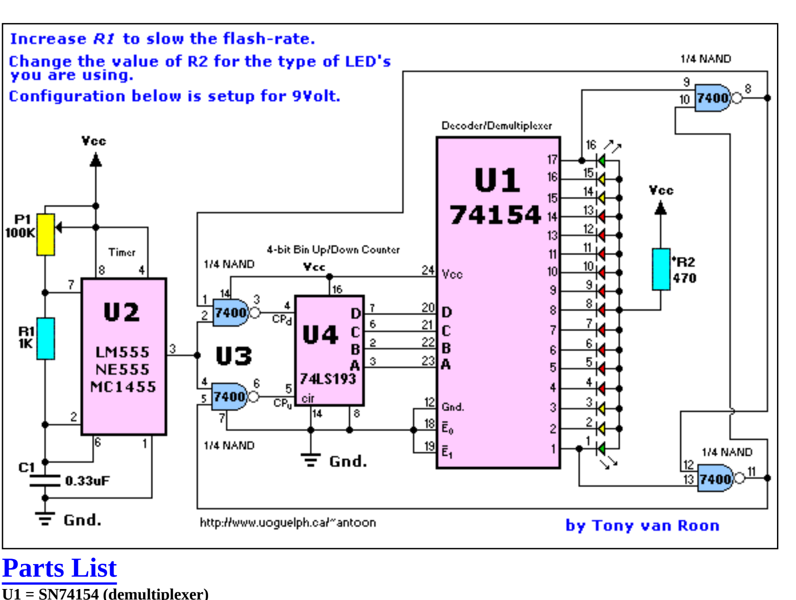

Parts List

U1 = SN74154 (demultiplexer)
U2 = LM555 (timer)
U3 = SN74LS00
U4 = SN74LS190
P1 = 100K
R1 = 1K
R2 = 470-Ohm
C1 = 0.33uF(tantalum)
16 LED's, high brightnes or ultra-bright

Table 1 - Connection Scheme

Pos	IC	Pin #	La #	Color	Wir	Wire
1.	74154	Pin 1	Led 1	Green	Or	Orange
2.	74154	Pin 2	Led 2	Yellow	Whi	White
3.	74154	Pin 3	Led 3	Yellow	Blu	Blue
4.	74154	Pin 4	Led 4	Red	Blk	Black
5.	74154	Pin 5	Led 5	Red	Rw	Red/White
6.	74154	Pin 6	Led 6	Red	Gw	Green/White
7.	74154	Pin 7	Led 7	Red	Bw	Blue/White
8.	74154	Pin 8	Led 8	Red	Bw	Black/White
9.	74154	Pin 9	Led 9	Red	Or	Orange/Red
10.	74154	Pin 10	Led 10	Red	Br	Blue/Red
11.	74154	Pin 11	Led 11	Red	Bkr	Black/Red
12.	74154	Pin 13	Led 12	Red	Rb	Red/Black
13.	74154	Pin 14	Led 13	Red	Bb	Blue/Black
14.	74154	Pin 15	Led 14	Yellow	Gb	Green/Black
15.	74154	Pin 16	Led 15	Yellow	Pi	Pinkk
16.	74154	Pin 17	Led 16	Green	Pu	Purple
17.	Gnd	12/18/19	Common	to everything	Gnd everything	Green
18.	Vcc+	24 and	anodes	5.5V to 7.5V	Re 5 - 7.5 V	Red
19.	n/a					
20.	n/a					
21.	n/a					
22.	n/a					
23.	n/a					
24.	n/a					

A Couple of Final Notes

Click here >>**LM555** << for more information and data on the 555 timer/oscillator IC. Keep wires as short as possible since too long wires coming from the 74154 to the led's will give trouble getting them 'running' properly. I had this circuit installed in the nose of my helicopter before I sold it and the circuit was working good. This circuit is for those electronics persons with experience only. In either case, it is definately a good learning experience. Have fun!

Back to Gadgets' Menu page

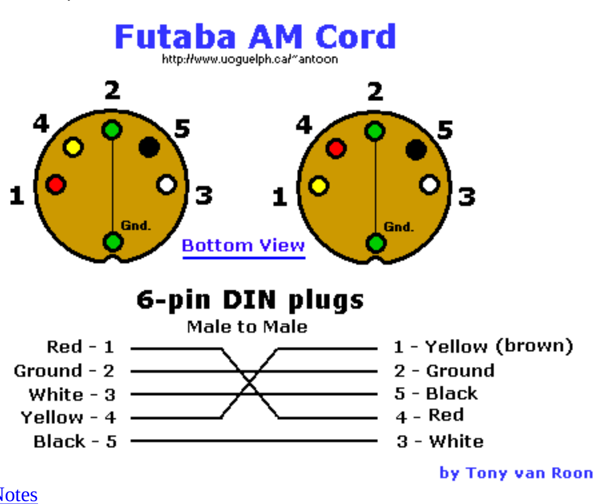

Additional Notes

1 - Pin 1 and Pin 4 (red & yellow wires) are crossed. D.I.N. is a european 'norm' originating from Germany. The D.I.N. abbreviation stands for "Deutshe Industrie Norm" and means translated "German Industry Standard".

2 - Each of the 5 wires have an individual (stranded) shield.

3 - Pin 2 (ground) can be any color, but is usually brown or black.

Back to R/C Gadgets Page

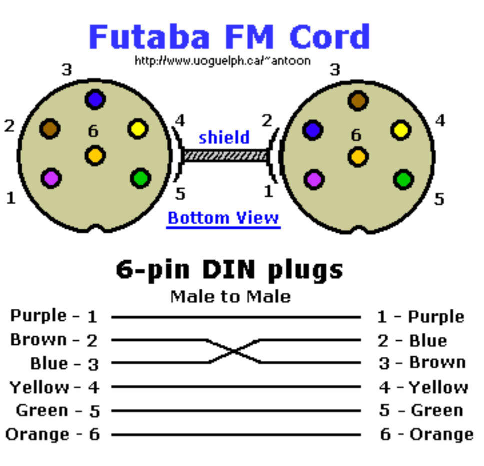

Pin 2 and Pin 3 (brown & blue wires) are crossed. (pin 2/brown goes to pin 3/blue). Braided-wire is going to plug-shield. This shield IS required!

Back to R/C Gadgets page

IRF511 TMOS Power FET
Data sheet

Direct substitute for NTE66, ECG66

by Tony van Roon

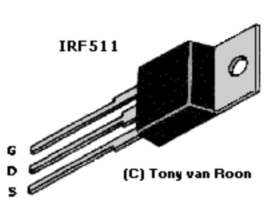

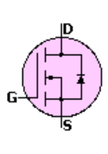

The IRF511 is a N-Channel enhancement-mode Silicon Gate TMOS Power Field Effect Transistor in a TO-220 package. This TMOS Power Fet is designed for low voltage, high speed power switching applications such as switching regulators, converters, solenoid and relay drivers.

Notes:
- Silicon gate for Fast Switching speeds
- Rugged -- SOA is Power Dissipation Limited
- Source-to-Drain Diode characterized for use with inductive loads

Device #	Vds	rDS(on)	Id
IRF510	100V	0.6 Ohm	4.0 A
IRF511	60V	0.6 Ohm	4.0 A
IRF512	100V	0.8 Ohm	3.5 A
IRF513	60V	0.8 Ohm	3.5 A

Back to Gadgets Menu page

JR (Japan Radio) FM Trainer Cord

by Tony van Roon

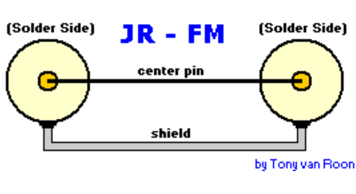

Couple Notes

The ground (or shield) wire can be a regular wire but usually is braided. Cable length should not exceed 15 feet.
Wire and Shield are connected straight through.

Do NOT add a battery of any kind to the buddy box (unless otherwise stated in the manual). Check your manual or ask your dealer if you need a battery in the buddy box or not. I will check with JR if there are different configurations for the cables in regards to different models radios or not. 6-18-2002.

Back to R/C Gadgets Page

Lead Acid Battery Charger

by Tony van Roon

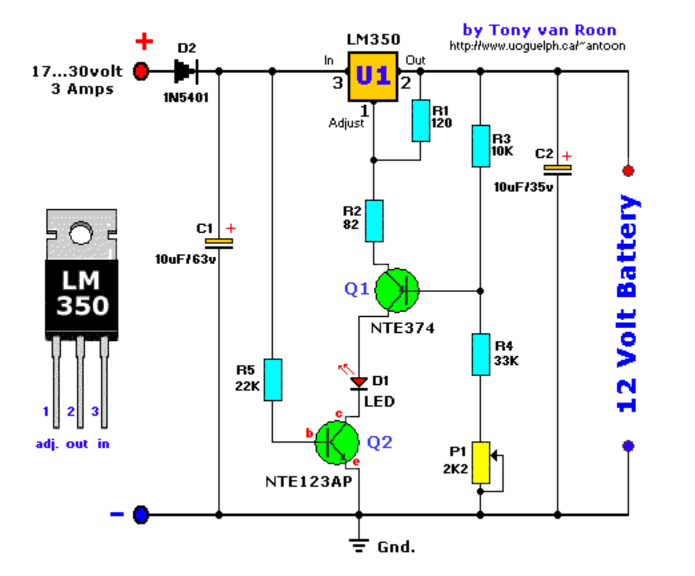

Parts List:

R1 = 120 Ohm	C1 = 10uF/63V	Q1 = NTE374/BD140
R2 = 82 Ohm	C2 = 10uF/35V	Q2 = NTE123AP/BC547
R3 = 10K	D1 = 1N5401/NTE5801	U1 = LM350 (On large coolrib!)
R4 = 33K	D2 = LED (Red, 5mm)	
R5 = 22K		
P1 = 2K2		

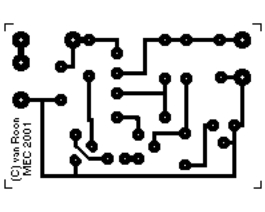

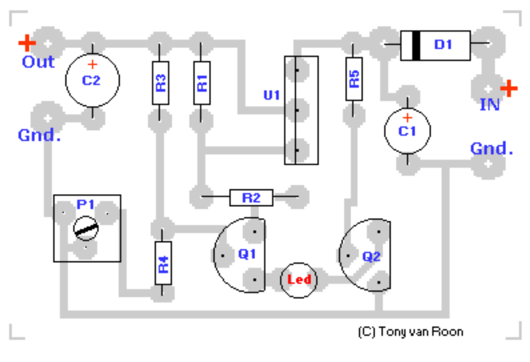

How it works:

Except for use as a normal Batter Charger, this circuit is perfect to 'constant-charge' a 12-Volt Lead-Acid Battery, like the one in your flight box, and keep it in optimum charged condition. This circuit is ***not recommended for GELL-TYPE batteries*** since it draws to much current. The above circuit is a precision voltage source, and contains a temperature sensor with a negative temperature coëficient. Meaning, whenever the surrounding or battery temperature increases the voltage will automatically decrease. Temperature coëficient for this circuit is -8mV per °Celcius. A normal transistor (Q1) is used as a temperature sensor. This Battery Charger is centered around the **LM350** integrated, 3-amp, adjustable stabiliser IC. Output voltage can be adjusted with P1 between 13.5 and 14.5 volt. T2 was added to prevent battery discharge via R1 if no power present. P1 can adjust the output voltage between 13.5 and 14.5 volts. R4's value can be adjusted to accommodate a bit larger or smaller window. D1 is a large power-diode, 100V PRV @ 3 amp. Bigger is best but I don't recommend going smaller.

The LM350's 'adjust' pin will try to keep the voltage drop between its pin and the output pin at a constant value of 1.25V. So there is a constant current flow through R1. Q1 act here as a temperature sensor with the help of components P1/R3/R4 who more or less control the base of Q1. Since the emitter/base connection of Q1, just like any other semiconductor, contains a temperature coëficient of -2mV/°C, the output voltage will also show a negative temperature coëficient. That one is only a factor of 4 larger, because of the variation of the emitter/basis of Q1 multiplied by the division factor of P1/R3/R4. Which results in approximately -8mV/°C. To prevent that sensor Q1 is warmed up by its own current draw, I recommend adding a cooling rib of sorts.
(If you wish to compensate for the battery-temperature itself, then Q1 should be mounted as close on the battery as possible)
The red led (D2) indicates the presence of input power.

Depending on what type of transistor you use for Q1, the pads on the circuit board may no fit exactly (in case of the BD140).
Caution: Adjust the voltage of capacitor C1 according to the input voltage. Example, if your input voltage will be 24 volt, your C1 should be able to carry at least 50V.

Back to Gadgets Menu page

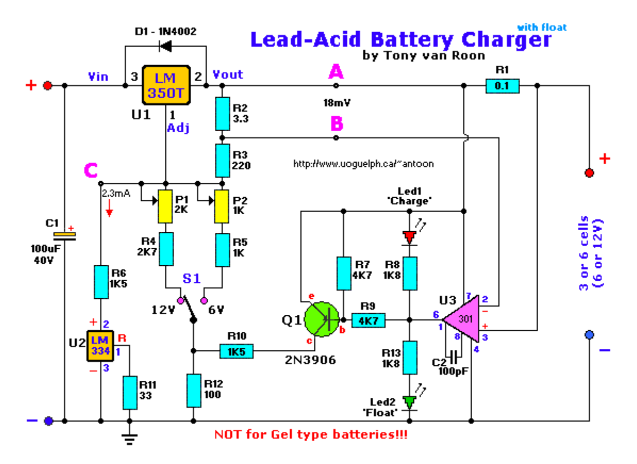

Parts:

R1 = 0.1 ohm	P1 = 2K
R2 = 3.3 ohm	P2 = 1K
R3 = 220 ohm	C1 = 100uF/40V (Electrolytic)
R4 = 2K7	C2 = 100pF (0.1nF)
R5 = 1K	U1 = LM350
R6 = 1K5	U2 = LM334
R7 = 4K7	U3 = LM301A
R8 = 1K8	Q1 = 2N3906
R9 = 4K7	D1 = 1N4002
R10 = 1K5	Led1 = Red, 5mm
R11 = 33 ohm	Led2 = Green, 5mm
R12 = 100 ohm	S1 = Switch, ON-ON
R13 = 1K8	

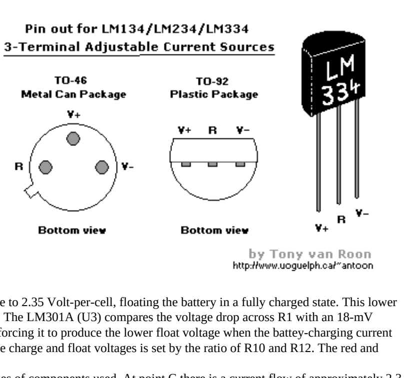

Notes:

The circuit furnishes an initial charge voltage of 2.5 Volt-per-cell at 25°C to rapidly charge a Lead-Acid battery.
The charging current decreases as the battery charges, and when the current drops to about 180mA, the charging circuit reduces the output voltage to 2.35 Volt-per-cell, floating the battery in a fully charged state. This lower voltage prevents the battery from overcharging, which would shorten its life. The LM301A (U3) compares the voltage drop across R1 with an 18-mV reference set by R2. The comparator's output controls the voltage regulator, forcing it to produce the lower float voltage when the battey-charging current passing trhought R1 drops below 180mA. The 150mV difference between the charge and float voltages is set by the ratio of R10 and R12. The red and green Led's show this state of the circuit.
At points A and B you would see approximately 18mV depending on the types of components used. At point C there is a current flow of approximately 2.3 milli-amps, again, depending on your choice of components and ofcourse the input voltage at 'Vin' of the LM350 regulator.
Led1 is a red led, and for Led2 you can also use a yellow or red one. Make sure that C1 is at least twice the input voltage. C2 is a small ceramic type. Vin is at least 18-20volt max about 30V. Switch S1 is a toggle or slide (ON-ON) switch of your choice. The regular on-off type will not work.
This circuit is ***not recommended for GEL-TYPE batteries*** since it draws to much current.

Below are the layout and pcb for this project, with thanks to ***Chaisaeng Euesakulkieat:***

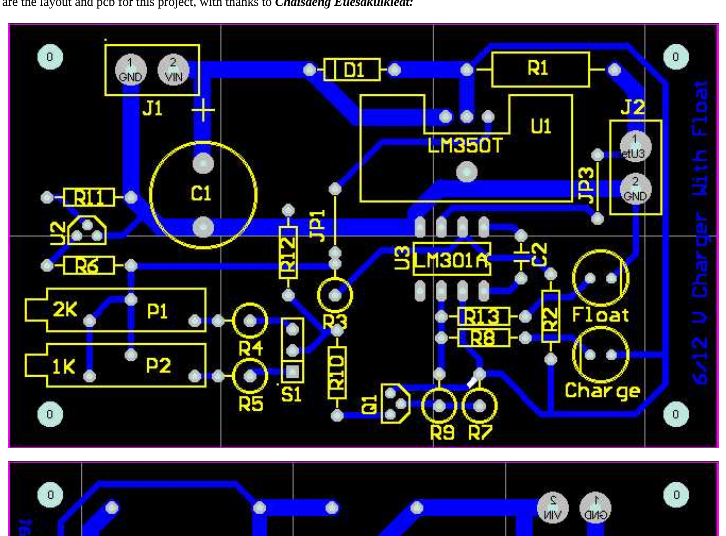

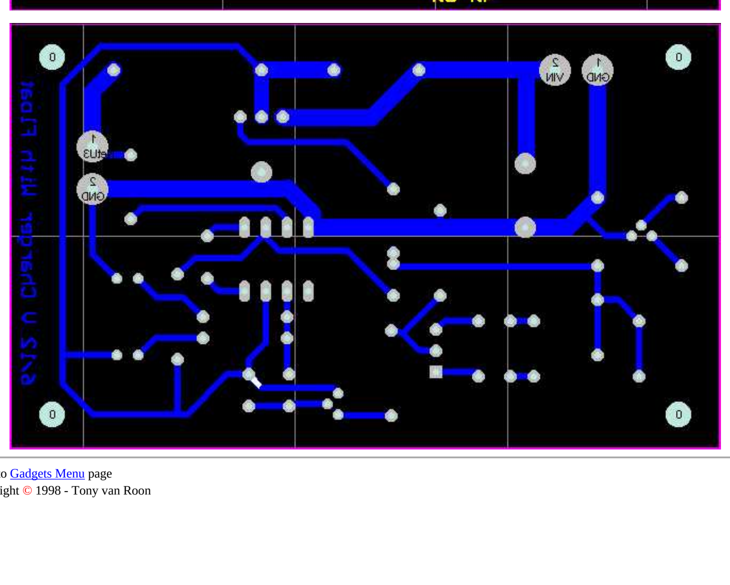

Back to Gadgets Menu page

Modifying a Servo

by Tony van Roon

Project Background Info:

[illegible] a digital 10-channel radio transmitter merely for the needed channels and reliability of JR products.
The project was handed to me by our local "Land Resources" department, for my extensive experience with all sorts of radio control systems and products.

Since modifying the digital servos was not gone work, I opted for four cheapie analog servos, Hobbyco C60 (made by HiTec). The little pot inside the servo is 5K and so has to be replaced with 2.5K resistors each. Since 2.5K is not standard stock, I opted for 2.4K resistors. Worked out fine. (I thought maybe publishing my findings could possibly assist in helping someone else obtain the same goals). Check the pictures at the bottom of the page for the modification sequence. I soldered a couple days later two small ceramic capacitors (0.01uF) over the servo motor power connections to eliminate 'servo-creep' on a Futaba servo. Worked fine. See picture 16-a down below.
Also, remove the notch (or stopper) from the gear with the bearing. Snip it off with a cutting plier and then use an exacto knife to clean up the rest.

Underneath this blimp is a system with 2 infra-red cameras which takes a variety of pictures from the soil at different locations. The different colors of the soil in the pictures are then analyzed in regards to soil looseness, clay, (hot)rock, type, etc. The system which houses these cameras had to extremely safe. The 2 cameras alone are expensive at a cost of $35K each and weigh almost 4 pounds each plus the battery packs and R/C equipment and weight of the aluminum frame (cage) itself. Total weight to be carried by the blimp, at one time, was about 15 pounds (Can). Cameras can be switched with Infra-red cameras or night vision, etc.

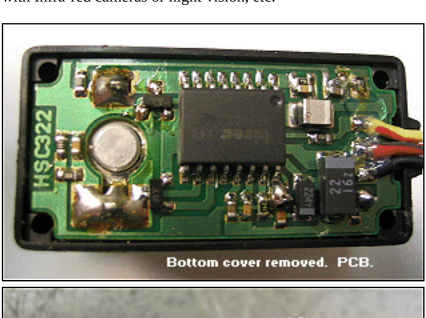

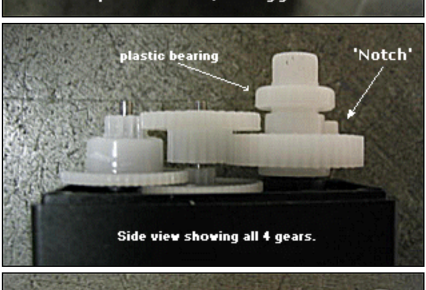

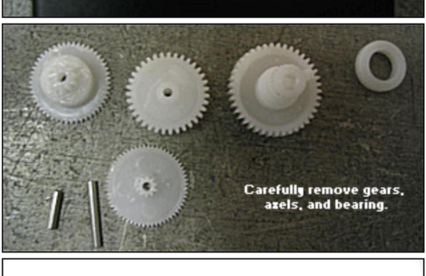

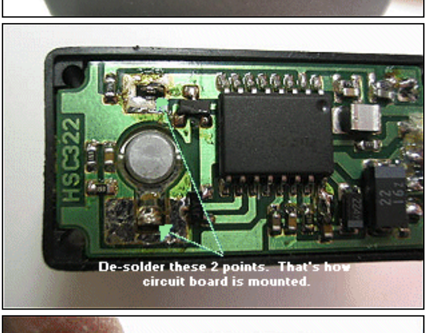

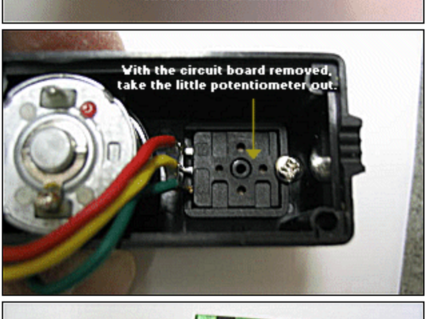

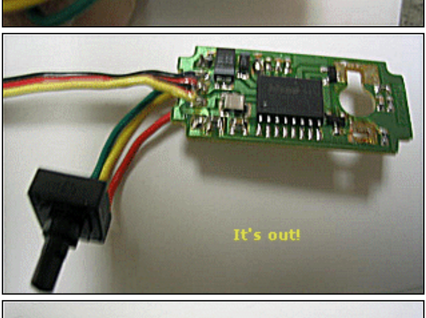

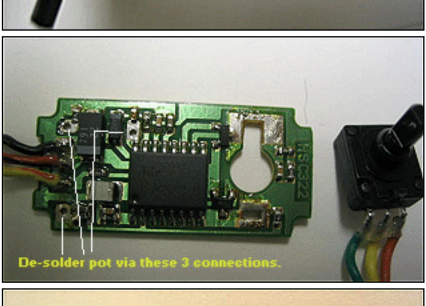

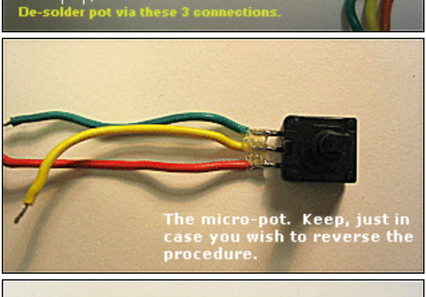

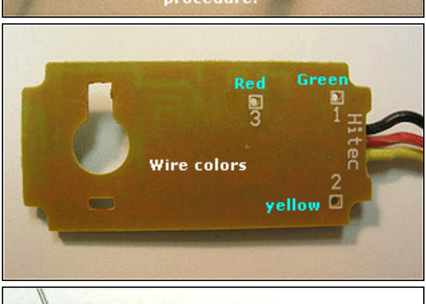

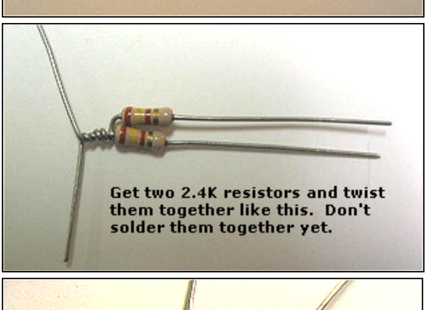

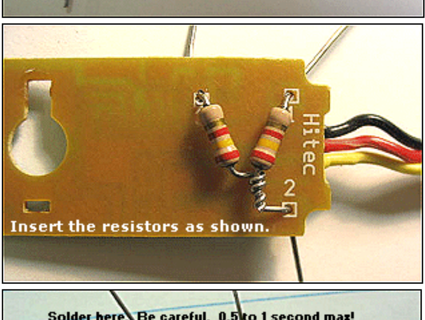

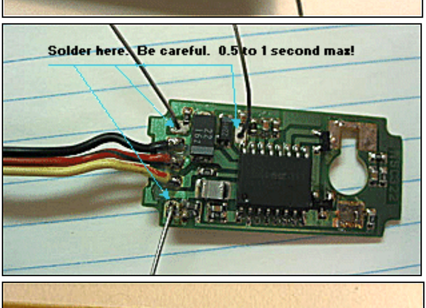

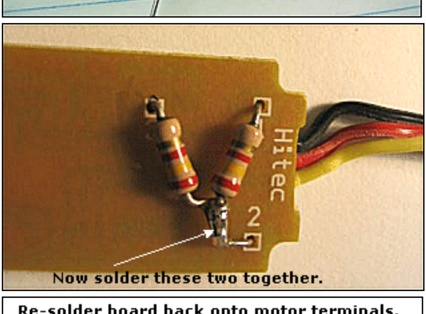

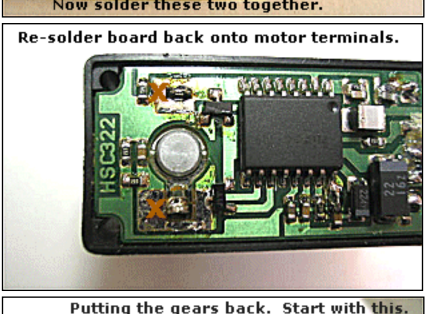

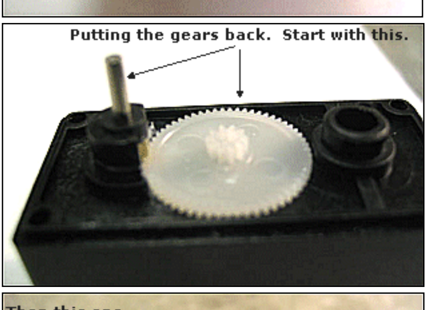

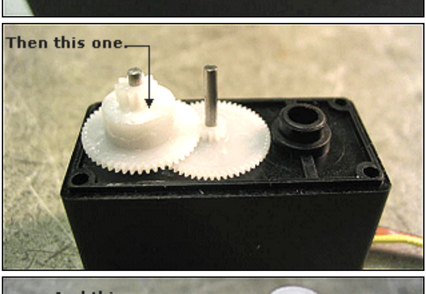

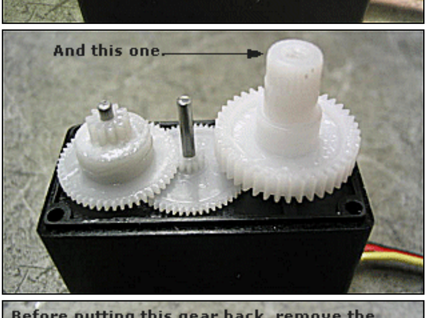

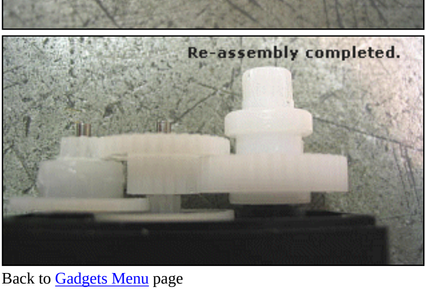

Back to Gadgets Menu page

Last updated September 16, 2004

A Time Delayed Model Rocket Launch Control

By Tony van Roon

"Add a touch of class and safety with this deluxe model-rocket launch control circuit."

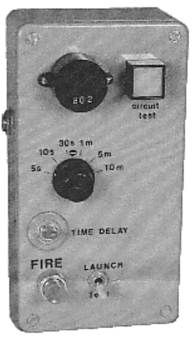

Since the introduction of low-cost model rocket engines in the 1950's, building and launching small scale model rockets have been popular pastimes. While designing and finishing high-performance models is both interesting and challenging, it is also fun to design and build electronic gadgets to go along with them. One such gadgets is the *Time Delayed Launch Control* in this article.

With the Time Delayed Launch Control, you press the fire switch to initiate a launch sequence, then the circuit begins to count-down, giving you plenty of time to step back so that you can view the impending event from a safe distance, record the launch, or prepare to monitor experiments during the flight. At the end of a preset period, the circuit ignites the rocket's engine, sending it skyward.

The circuit has six preset delay intervals: 5, 10, and 30 seconds, and 1, 5, and 10 minutes. The circuit also contains a piezo-electric buzzer that beeps every few seconds as the system counts down to launch. As a safety feature, a launch sequence can be aborted at any time, simply by shutting off the system or by switching to the test-mode. The main function of the test mode, however, is to verify, via a front panel indicator, that the ignition circuit is properly wired. The circuit is powered from its own internal battery pack, which also provides power to the rocket- engine igniter.

Circuit Description:

A schematic diagram of the Time Delayed Launch Control is shown in Fig. 1. The circuit--which gives a choice of 6 delay settings--is comprised of three 555 timer/oscillators (U1, U2, U3), a pair of transistors (Q1 and Q2), four switches (S1 - S4), a piezo electric buzzer (BZ1), and a few support components. Power for both the control circuit and the rocket-engine igniter is provided by a 6-volt power source that is comprised of 4 AA-cell alkaline batteries. Alkaline batteries are specified because other types are incapable of supplying the 1-3 amps required to fire a rocket-engine igniter. Closing switch S1 feeds power to the launch control circuit, but does not initiate a launch sequence.

A pair of series RC circuits (R4/C9 and R8/C12, respectively) are used to debounce the reset inputs (pins 4) of U1 and U2 (a pair of 555 oscillator/timer IC's), thereby, preventing false triggering from occurring during power-up or when switching modes. Pull-up resistors R1 and R2 effectively shunt capacitor C1, keeping it discharged until S2 (Fire) is momentarily closed. When S2 is closed, C1's negative terminal is connected to ground through the switch, momentarily pulling pin 2 of U1 (which is configured as a monostable multivibrator, or one-shot) low, activating it.

Once triggered, U1's output goes high for an interval that's determined by R3 and one os six timing capacitors (C2 through C8). The timing capacitor is selected via *Delay Selector* switch S3. Positions 1 through 6 of S3 give intervals of 5, 10, or 30 seconds or 1, 5, or 30 minutes, respectively.

The high output of U1 at pin 3 is fed through current-limiting resistor R12 to the base of Q2, forward biasing it, which causes Q2 to turn on, allowing the piezo-buzzer (BZ1) to turn on when the proper signal is applied to BZ1's negative terminal. Monostable U1's output is also fed to the reset input of U3 (which is configured as an astable multivibrator or oscillator) at pin 4, causing it to oscillate with a duty cycle of about 75% (as determined by C14, R10, and R11). As long as the output of U1 is high and the astable is oscillating, BZ1 beeps once every 4 seconds.

Resistor R5 discharges coupling capacitor C10 whenever U1's output goes high, while R6 maintains the normally high bias voltage required at U2's trigger input (pin 2). At the end of the selected time delay, U1's output goes low. That low is coupled through C10 and D1 to the trigger input (pin 2) of U2, which (like U1) is configured as a monostable multivibrator.

Components R7 and C11 set U2's high-output interval to approximately 3 seconds. During that 3-second interval, U2's high output at pin 3 is fed to Darlington transistor Q1 through R9 (which limits the bias current to the device to less than 40 mA). With S4 in the *Launch* position, Q1 grounds one end of the engine igniter, effectively connecting it to the battery's negative terminal. During that 3-second interval, approximately 1-3 amps passes through the engine igniter, causing it to glow and burn.

For a detailed description, workings, and pins of the 555 timer/oscillator, please click here.

Construction:

To assemble the launch-control circuit, you will need all of the components listed in the parts list. You will probably want to customize the project, so pick out switches, a lamp, and a piezo-buzzer that will give our launch control an interesting and personalized appearance. Start with the enclosure. The enclosure must be large enough to accommodate the printed circuit board and all of the front panel controls, and still leave room for the quad AA-cell battery pack. The overall dimensions of the enclosure should be about 6 x 3 inches. It is recommended that the circuit be housed in a brightly-colored ABS plastic enclosure. A plastic enclosure is recommended because you will have to drill about ten holes in it, and ABS plastic is much easier to work with than steel or aluminum.

Choose a convenient location on the front panel for the test lamp (I1), the piezoelectric buzzer (BZ1), and the four switches (S1-S4). Mark and drill the mounting holes for those components. Then drill a hole in the side of the enclosure for the phono jack J1. It should be located about 2 inches from the end of the enclosure where the battery pack will go. Clean any burrs from the holes and check all front-panel components for a proper fit, but do not mount them yet.

If you are unable to find a brightly colored enclosure, you can spray-paint the one you choose after all the mounting holes have been drilled and deburred. If you must paint the enclosure, apply 2 or 3 thin coats of primer (or white), followed by 2 thin coats of a bright-colored paint. Give each coat a couple hours to dry before applying the next coat, then let it set overnight. Just a word of caution; make sure the primer you are using is compatible with your final paint.

With that done, use dry-transfer (rub-on) lettering to label each switch position according to its function--the rotary switch with its delay times should be marked at each stop--and test the lamp.

After labeling, protect the dry transfer lettering by applying one of two coats of clear lacquer. Allow all coats to dry several hours or overnight. The front panel is now ready for assembly. Mount BZ1, I1, and S1-S4, and J1 to the enclosure, and don't forget to install a knob on the shaft of S3.

Since the control circuit contains only three IC's and two transistors, you can easily assemble it on a small piece of perfboard or 'Vero-board' using wire-wrap or point-to-point wiring techniques. However, the author's prototype was assembled on a printed circuit board that measures about 2 by 2-13/16 inches. A full-size template of that pcb lay-out is shown in Fig. 2. Once you have etched the board, drill all holes with a No. 67 bit. That bit size will accommodate all of the component leads and the 22 & 26 AWG hookup wire that will be used for the interconnections between the board and the panel mounted components.

Following the parts placement diagram shown in Fig. 3, install the capacitors, making sure that they are all flush to the board, while observing their polarity. Likewise, install the resistors flat against the board. That minimizes lead lengths and give a neater appearance. Install an 8-pin DIP socket at all IC (U1-U3) locations. That helps eliminate the possibility of damaging the IC's which are static sensitive during soldering. Next, install transistors Q1 and Q2, taking care to properly align the emitter, base, and collector leads. Then, using hookup wire, or the excess leads clipped from the resistors, install the 5 jumper connections in the locations shown.

Cut six 8-inch lengths of 26 AWG stranded hookup wire. Twist pairs of wires together, making three pairs in all. Next, cut five 8-inch lengths of 22AWG stranded hookup wire. Twist three of these wires together to make a 3-lead set for S4, and then twist the remaining pair together for S1. Once that is done, strip about an 1/8th inch of insulation from the ends of all the leads.

Solder one 26 AWG pair to the two printed circuit pads that are identified as BZ1 in Fig. 3. Being careful to observe the correct polarity, solder the other ends of those leads to BZ1. Similarly, install the other two 26 AWG leads between the printed circuit board and lamp I1, and the printed circuit board and S2. Next, install the 3-conductor 22 AWG wire set between the printed circuit board and S4. Be careful to identify each of the three printed circuit pads corresponding to the appropriate terminals of S4. Then solder the remaining 22 AWG pair between the printed circuit board and S1.

Rotary switch S3 requires a 7-conductor cable. Use either 26 AWG or 28 AWG ribbon cable for S3. Cut an 8-inch length of 7-conductor cable and strip 1/8th inch from all ends. Following that, solder the cable to the appropriate printed circuit board pads. Next, solder the other end of the cable to the rotary switch, making sure that **lead number seven connects to the wiper**. Install and solder the two leads coming from the battery holder to the printed circuit board. Again, be certain to identify the correct polarity of each lead and each printed circuit pad.

For the engine-igniter leads, cut two 3-foot or more lengths of 22 AWG stranded hookup wire. The actual length of this wire set depends on how far you want to place the control box from the launch pad--mine are about 3 feet. Once you have decided on the length, twist them together and strip about an 1/8th inch insulation from both ends of each conductor. Solder a micro clip to one end of each lead. Push the other ends of the leads through the phone-plug sleeve, solder the two free ends to the tip and ring terminals of the phono plug, and then install the sleeve.

Finally, fasten the printed circuit board to the enclosure using a 1-inch length of double-sided foam tape between the bottom of the printed circuit board and the inside of the enclosure. That is easier than using mounting hardware, and gives a neater overall appearance. Works just as good.

Test and Use:

Set S3 to the *30 S* position, S4 to the *Test* position, and install 4 AA Alkaline batteries in the quad battery holder. Attach an engine igniter to the two micro clips and insert phone-plug PL1 into jack J1; the test lamp, I1, should light. Now switch S4 to the *Launch* position, turn on S1 and press S2, *Fire*. The piezo buzzer (BZ1) should begin to beep every few seconds. After about 30 seconds, the beeping stops, and the igniter fires.

Warning: Always pull the phone plug from its jack before attaching the micro clips to a live engine! Also **do not** allow the micro clips to short during a launch or test; otherwise transistor Q1 could be damaged.

Should any of the above tests fail, troubleshoot the circuit using a DC voltmeter. To do so, attach the meter's negative probe to ground, turn S1 on, and measure the voltage at pin 8 of each 555 timer--you should get a reading of approximately 6 volts. If so, check the voltage at pin 3 of U1, and then press S2. The voltage should remain near 6 volts during the time-delay interval and then go to zero. Similarly, at pin 3 of U2, the voltage should be at 6 volts for approximately one out of every 4 seconds. At pin 3 of U3, it should change from zero to 6 volts at the end of the time delay, and then return to zero. If any of those tests fail, recheck all solder connections and component values associated with the defective timer.

If you don't want to spend the extra moneys on pcb switches and other stuff, do as you wish. It is not mandatory. You may have already some switches you like to use. There is just a little bit of extra wiring required. No problem, use whatever you like. Just in case you were thinking of using NiCad batteries for the AA battery pack; NiCads will not work, although they are called 'AA' in reality they do not provide 1.5 V but rather 1.25 volt. Times 4 that gives only 5 volt instead of the required 6 volt.

The Time-Delayed Launch Control makes a great weekend project. Since all of the parts are inexpensive and come in a variety of shapes and sizes, the control panel can take on a customized look, limited only by your imagination. So heads up and happy flying!

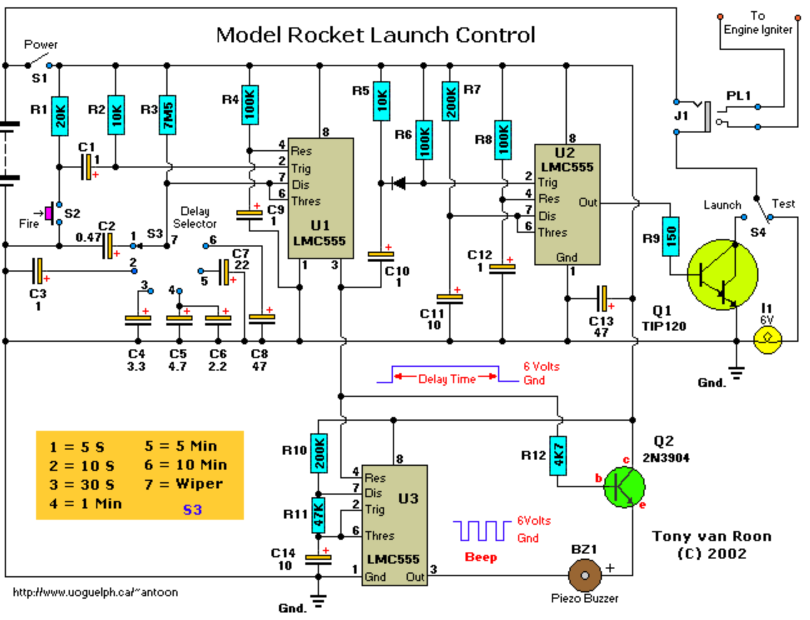

Parts List and other components:

Semiconductors:

U1-U3 = LMC55CM, NTE955MC, or similar **CMOS** timer.
Q1 = TIP120, SK3180, NTE261,(or similar) NPN darlington transistor
Q2 = 2N3904, NTE123AP, or similar general purpose NPN silicon transistor
D1 = 1N4148, NTE519, or similar general purpose silicon signal diode

Resistors:

All Resistors are 5%, 1/4-watt
R1 = 20K
R2,R5 = 10K
R3 = 7.5M
R4,R6,R8 = 100K
R7,R10 = 200K
R9 = 150 ohm
R11 = 47K
R12 = 4K7 (4.7K)

Capacitors:

All Capacitors are Radial Lead Electrolytic
C1,C3,C9,C10,C12 = 1 µF, 16V
C2 = 0.47 µF, 16V
C4 = 3.3 µF, 16V
C5 = 4.7 µF, 16V

C6 = 2.2 μF, 16V
C7 = 22 μF, 16V
C8,C13 = 47 μF, 16V
C11,C14 = 10 μF, 16V

Additional Parts & Materials:

B1 = *See text*
S1 = SPST toggle switch
S2 = Momentary (Normally Open) pushbutton switch
S3 = SP6T rotary switch
S4 = SPDT toggle switch
J1 = Phone jack
PL1 = Phone plug
BZ1 = Piezo-electric buzzer
I1 = 6V Incandescent lamp
PCB materials, enclosure, 7-conductor ribbon cable, quad AA-cell battery holder and connector, micro-alligator clips, knob, 22 AWG and 26 AWG stranded hook-up wire, solder, hardware, etc.

For Radio Shack part numbers click on this RS data sheet.

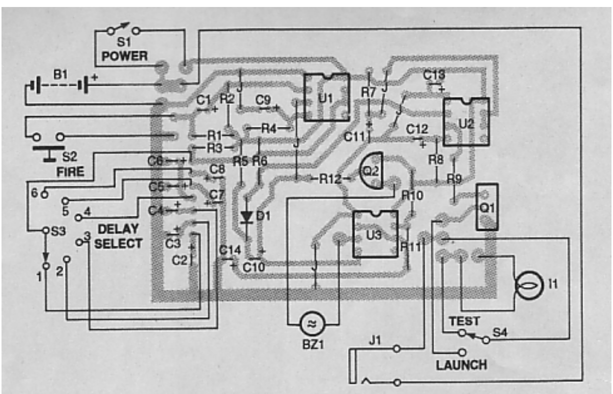

Fig. 3. Following this layout diagram, assemble the Time-Delayed Launch Control, keeping in mind that the polarized components must be installed with the proper orientation.

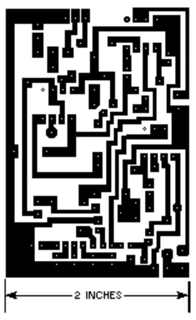

Click Here for the PCB Diagram

I fully support this project. Most parts can be obtained via your local Radio Shack or Tandy store. I will answer all questions but via the message forum only. ***Tony's Message Forum*** can be accessed via the main page, gadgets, or circuits page.

Copyright and Credits:

The original project was written by Dan Becker. Reproduced from Popular Electronics, May 1994, by permission of Gernsback Publishing, Inc. Document updates & modifications, all diagrams, PCB/Layout redrawn by Tony van Roon. Re-posting or taking graphics in any way or form of this project is expressly prohibited by international copyright © laws.

Back to R/C Gadgets page

Model Rocket Strobe Light

By Tony van Roon

"Launch a model rocket on the darkest night, and find it in a flash no matter where it lands!"

"I shot an arrow in the air, it fell to earth I don't know where". When Longfellow penned those words in the 1800's, he must have been thinking about my model rocketry career! The bane of a model rocket or r/c airplane hobbyist is losing a carefully constructed and painstakingly finished model in shrubbery, or trees. But those days are over. Our *Rocket Strobe* sends out a highly visible S.O.S. for up to 2 hours, providing ample time to locate and recover the model. It also makes dramatic night launches a reality, with the blue-white flash of the Strobe visible throughout the flight sequence.

Seeing the Light:

Invented in 1923 by Dr. Harold E. Edgerton, Xenon flash lamp is the light-producing device for our Strobe. Flash lamps produce a short-duration, high-intensity pulse of light by converting energy stored in a capacitor to visible light. Each flash of the Strobe lasts about 500 micro-seconds. For that brief instant, the flash is as bright as a 4KW (4000 Watt) lamp! It is the high intensity of the light pulse that produces long-range visibility--yet, the Strobe requires very little energy input.

Basic Strobe Circuit:

A strobe circuit has four basic parts. (See Fig. 1). The first is the power supply, which must be capable of producing about 300 volts from a 9-volt battery. That high voltage is required to sustain the arc within the lamp after triggering. Second, we need a capacitor to store energy. The luminescence provided by the Strobe is directly related to the value of the capacitor, or to the amount of energy that the capacitor can store. Third, we need a triggering circuit to produce a very high voltage pulse to ignite the lamp. A typical ignition pulse has an amplitude of 4000-volts, and is several microseconds in duration. The trigger pulse is capacitively couple to the Xenon gas inside the lamp. When enough atoms are ionized by the pulse, and if the capacitor has enough charge on it, the gas fully conducts. Light output begins after conduction, and continues until the charge on the capacitor drops to about 50 volts. The lamp shuts itself off at that point, to renew the cycle after the voltage build up again.

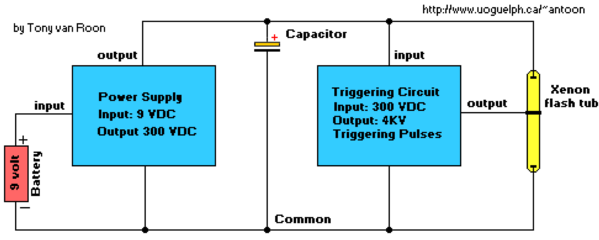

Fig. 1. Here is a block diagram of the basic strobe circuit, which consists of a power supply, storage device (the capacitor), triggering circuit, and a Xenon flash lamp.

Last, we need a Xenon flash lamp; which is available at Radio Shack/Tandy and other outlets or use one from an old camera flash. There are several different shapes and designs of flash lamps. We shall use a small, straight type in our Strobe.

Size and Weight:

In order to be successfully lifted, our Strobe needs to be small, efficient, and light. Weight and size saving is accomplished by miniaturizing the power supply. Surplus electronics suppliers often have camera electronic flash boards left over from manufacturing overruns. Those boards contain tiny transformers that are capable of producing hundreds of volts from a battery-powered driver circuit. Or check out old used cameras with an electronic flash. Good sources are flea markets or used equipment stores like Salvation Army, or Value Village, etc.

To drive them with maximum efficiency, we use a hex FET, and a pulse-width-modulator (PWM) circuit. That combination results in maximum power output from the smallest size and weight unit, while providing an adjustable flash rate.

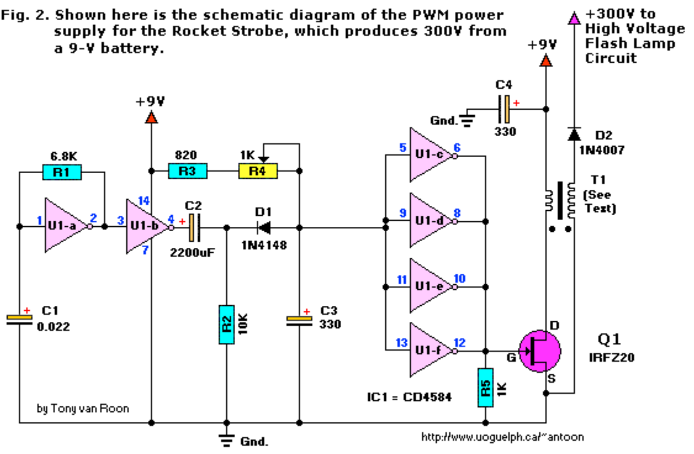
Fig. 2. Shown here is the schematic diagram of the PWM power supply for the Rocket Strobe, which produces 300V from a 9-V battery.

Strobe Circuit Construction:

Referring to Fig. 2, gate U1-a (one-sixth of a CD4584 CMOS Schmitt Trigger) is configured as an oscillator. With the values shown, the oscillator operates at 6 KHz. You may need to experiment with different frequencies by using the different values of C1 and R1 to obtain maximum output if you use a transformer other than the one specified in the Parts List.

Gate U1-b squares up the output of U1-a and feeds a square ware to C2, C2, R2, R3, D1, and R4. Trimmer potentiometer R4 controls the duty cycle of the resulting pulse. When R4 is set to its maximum resistance, the maximum pulse-width and power is available from the circuit.

The remaining gates (U1-c, U1-d, U1-e, and U1-f) serve to amplify and invert the output of the PWM (Pulse Width Modulator) part of the circuit. The amplified pulse is fed to the IRFZ20 Hex FET, whose upper low on-state resistance of only 0.07 ohm switches the primary of T1 with great force. Pull down resistor R5 keeps the IRFZ20 totally off during the logic '0' state of gates U1-c to U1-f. The output is rectified by D2, and is used to power the Strobe's flash lamp circuit.

A word is needed about miniature transformers. Most units have an accessory winding used in self oscillation circuits powered by bipolar transistors. That winding is not needed, since we have our own on-board PWM oscillator circuit. A simple test with an ohmmeter will reveal that low-resistance feedback winding. Do not confuse it with the low resistance, heavy gauge primary winding. Typical transformer configurations are shown for you in Fig. 3, as examples.

Another consideration is that lots of transformers are connected for European and Oriental active-negative circuits. (Akin to driving the wrong side of the road to us!) That confusion is easily overcome by identifying the start of the primary and secondary windings. Connect the start of each winding as indicated in Fig. 2.

When in doubt, you may make a simple power indicator from a NE-2 neon lamp and a 220K (220,000 ohm), half watt resistor, connected in series. Connect the lamp to the cathode of D2; and the lamp will glow much more brightly when the right combination of winding polarity is connected.

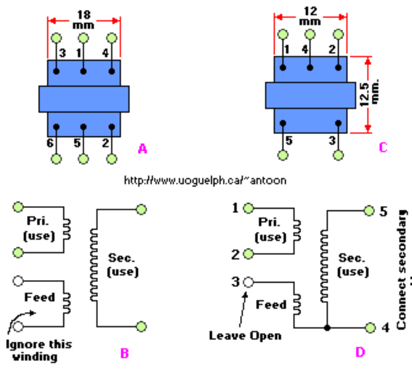

Fig. 3. If you use a miniature transformer salvaged from an old flash unit, it will be necessary to figure out the proper windings and/or connections. Shown here are two typical (old) miniature transformer configurations.

The Flash-Lamp Circuit:

Previously, we mentioned that there is a relationship between lamp luminance and the size of the main capacitor. A unit rated at 33µF will provide 2 watt/seconds (W/S) of light output. With our circuit, the flash rate is adjustable from one every 30 seconds to one every 4 seconds using trimmer potentiometer R4. You may want to experiment with different capacitor values to obtain the desired light output at the desired flash rate. For instance, a 10µF capacitor in our circuit will produce about 1/3 of the maximum attainable light level while providing a rate of nearly one flash per second at R4's maximum setting. That rate would be better suited to night photography of the flight sequence. A slower, brighter flash is ideal for recovering the rocket in the daytime, when visibility of the flash is at its worst.

A long battery life (at a slow flash rate) is possible by setting R4 to minimum. We strongly recommend the use of a 9-volt NiCad battery, to save on battery costs. Keep in mind though, that the so-called 9-volt NiCad does NOT actually contain 9 volts but rather around 7.6 volts (6 x 1.25/cell) and so the flash will not be as bright as with a regular Alkaline battery. I don't care about the cost of alkaline batteries. I buy 12 for $5.99. They come cheap these days. Regular carbon batteries work poorly because of their inability to supply the current needed for the strobe circuit. The average current consumption of the strobe at 9-Volts was measured at 230mA at maximum flash rate setting, and 45 mA at the minimum setting. Nickel Cadmium batteries give a slower flash because of their lower voltage.

The triggering circuit uses an interesting trick. (See Fig. 4). A small transformer, T2, is grounded via an SCR connected to its primary. When SCR1 switches on, the charge on C6 quickly travels through T2's primary and the SCR to ground. That induces a high voltage pulse in T1's secondary winding, which ignites FL1. A simple and inexpensive trigger circuit kicks on SCR1 when the charge on C7 is high enough to sustain the arc inside FL1. A voltage divider, consisting of R6 and R7, ensures that roughly 300 volts is stored in C7 before the neon lamp, NE1, fires. Neon lamps are designed to fire at different voltages. The common *NE-2 type* neon lamp used in our circuit fires at about 120-volts DC. When NE1 fires, it dumps the charge stored in C5 to the gate of SCR1. That in turn, produces a trigger pulse that is applied to flash lamp LF1, causing it to ignite, which allows you to find your rocket in a flash!

Speaking of flashes, let's look at different ways to attach a flash lamp to your rocket, rocket stability, what type of engines can loft your "bird", and a few suggestions for multiple strobes to increase visibility.

In our prototype, the flash lamp is attached to the end of the rocket's nose cone with silicone glue. The electronics are handily located in the nose, and the battery is held by a snap-in holder designed to withstand the shock and vibration of parachute deployment without losing the battery. The author used a combination 9-volt battery-snap connector and holder assembly.

A balsa wood plug is held securely in place by silicone, which also seals the components inside the nose cone, as well as providing an anchor point for the parachute, and shock-absorbing rubber cord leading to the rocket's body.

Strong assembly techniques are needed for the nose-cone/electronics package. The nose cone must withstand considerable force at the apex of flight when the rocket engine activates its ejection charge. There is nothing gently about the hefty charge of black powder that pops off the nose cone and deploys the parachute! Fig. 5 shows the parts of a rocket engine, and their function. Be sure to use enough silicone (without disturbing vertical, rotational balance) for good strength.

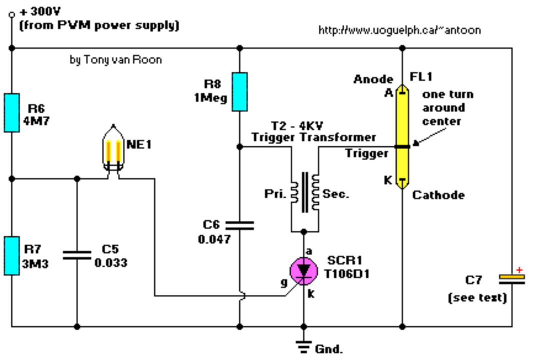

Fig. 4. The triggering circuit uses a small voltage transformer that is grounded via a SCR which, when triggered, induces the high-voltage pulse that ignites the flash lamp.

Weight must be minimized to allow your bird to lift off, and attain maximum height. Soft grades of balsa wood are the lightest, and weight savings may be gained by careful assembly of the electronics on a small board, using a minimum of solder. All said, our Strobe added 3-1/2 ounces to the rocket's weight. You may also save weight by not painting the model with too many coats of finish if it's to fly a Strobe.

If the electronics are ahead of the model's center of gravity (CG), the rocket should fly fine with the added weight. If, for some reason, you locate the electronics or battery behind the rocket's CG, a counter-balancing weight must be added to the nose to bring the CG back to its normal position. A rocket's CG is determined by its balance point with an unused engine installed. (See Fig. 6.)

A flash lamp may be attached to the rocket's nose, body, or fins. Be aware that the delicate flash lamp needs breakage protection. A rigid clear piece of plastic tubing placed around the lamp affords additional breakage protection. Plug the open end with a tapered balsa or plastic plug to preserve the rocket's aerodynamic sleekness. Use of a short, sturdy flash lamp, cushioned in Silicone may work fine, as it did with our model.

The parachute's size must be increased to compensate for the added weight: 40 square inches of parachute area per ounce of weight is recommended. All told, our rocket weighed 13.5 ounces, so 540 square inches of chute area was needed. We replaced the 18-inch chute that came with the model with two 24-inch ones. That gave about 900 square inches, which gently delivers the model to earth.

If you need to use more than one chute, attach each chute's shroud lines to a snap swivel (which can be found at the fishing tackle shops). Those handy little gizmos reduce the chance of the line tangling (which can lead to disaster) and enables you to clip on or remove chutes in a jiffy. More than one parachute means you will have to pack each carefully. Try not to wind the lines too tightly around the chutes, and use plenty of flame-proof wadding between the chutes and engine. Dusting the chutes with plain talcum powder lets them slide out freely during the engines's ejection phase and they unroll quicker when in the air.

The finished model's weight is an important consideration in engine selection. To launch successfully, the model must be less than the Maximum Lift Weight (MLW) of the engine type selected. Weight can really creep up on you (as all dieters know!). Our model, called the Phoenix, weighed 11.6 ounces, with the engine and strobe installed. After it was painted, the paint added 1.9 ounces! That put the total weight at 13.5 ounces, very close to the MLW of the engine we used.

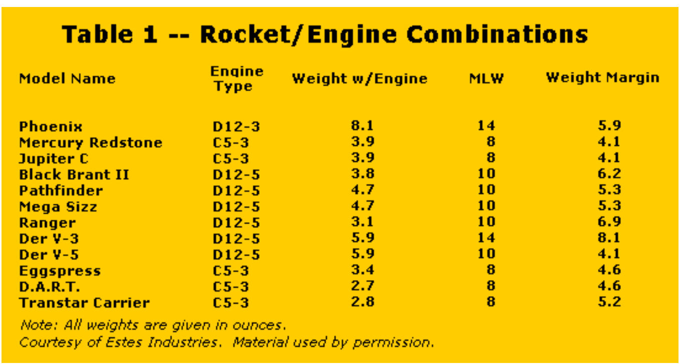

Table 1 -- Rocket/Engine Combinations

Model Name	Engine Type	Weight w/Engine	MLW	Weight Margin
Phoenix	D12-3	8.1	14	5.9
Mercury Redstone	C5-3	3.9	8	4.1
Jupiter C	C5-3	3.9	8	4.1
Black Brant II	D12-5	3.8	10	6.2
Pathfinder	D12-5	4.7	10	5.3
Mega Sizz	D12-5	4.7	10	5.3
Ranger	D12-5	3.1	10	6.9
Der V-3	D12-5	5.9	14	8.1
Der V-5	D12-5	5.9	10	4.1
Eggspress	C5-3	3.4	8	4.6
D.A.R.T.	C5-3	2.7	8	4.6
Transtar Carrier	C5-3	2.8	8	5.2

Note: All weights are given in ounces.
Courtesy of Estes Industries. Material used by permission.

Table 1 is an (Estes) listing of some (older) rocket/engine combinations that will lift off with the Strobe onboard. Each model was selected to provide a reasonable weight, and a body size large enough to hold a 9-volt battery. The weight margin is what's left over for the Strobe, paint, battery, and so forth. The rockets are sold in kit form, and manufactured by Estes Industries. Other designs may work, provided that you use lightweight batteries, and built the rocket and Strobe using minimal-weight methods. I guess the NiMh (Nickel Metal Hydrate) batteries these days would be the best choice. Not only are they much lighter then NiCads, they supply more current longer at true 9 Volts.

Multiple strobes add a very interesting touch. We used up to six flash lamps, strung in parallel, all operating from the same power supply. The light output appears to be equally divided among multiple lamps if they are all of the same type. To get the same brightness per lamp, you will have to increase the value of electrolytic capacitor C7 (see Fig. 4). For instance, with 3 lamps, C7 would need to be three times larger to provide each lamp with a high brightness, but the total light output would be tripled. Increase C6 to 0.1µF when using more than one lamp in parallel. The higher capacitance causes a greater charge to be dumped across T1's primary (and hence, a larger secondary current), which guarantees the ignition of all lamps.

Construction:

Well, by now you are an expert on power supplies, strobes, rockets, and aerodynamics; so let's roll up our sleeves, and get to work!

You may make a pcb, or wire the electronics on perfboard (which we did). A universal printed-circuit-board worked fine. As you assemble the circuit, be mindful of the need to minimize weight. Use just enough solder to make a good joint. Trim away excess space on your mounting board.

Wherever possible, use miniature (or smt) components. A NiCad or NiMH battery will save you quite a bit of weight (1.25 ounces vs almost 2 ounces for an alkaline unit). The NiCad gives a good 15 minutes of flashing at high rate, and over 1 hour on slow. Even better results with the NiMH type.

The power supply layout is not critical, but you must pay attention to the high-voltage output of the trigger transformer. That little guy puts out over 4,000 volts, and while it does not look too dangerous it packs quite a nasty wallop!

Dress the secondary leads away from other components; a half inch is recommended. The wires leading to capacitor C7 and the trigger transformer should be short, and if on the outside of the rocket, glued flat to avoid excess air drag. If you run the wires inside the body, make sure that they won't become tangled in the recovery system! Also, the ejection gases will quickly rot the insulation on wires; if they are in an exposed area, jacket and seal them in heat shrink tubing or the kind of plastic tubing sold for aquarium air lines.

Wire size is not critical; we had fine luck with #26 stranded hook-up wire. Make sure flash-lamp polarity is observed. The end with the large round electrode is the cathode, which is always connected to ground. Some flash lamps have a trigger-wire already attached to one end, but on those that don't, one wrap of bare wire around the lamp's center will do the the trick. Secure the wire with a tiny dab of epoxy or Crazy glue to the glass.

Make sure that the leads to the lamp are well insulated at the splices. A connector is handy to have in the circuit leading to the lamp. That way, the electronics can be quickly disconnected for testing or adjustment. Eventually, the lamp burns out and has to be replaced, but only after many, many flashes. The author calculates the lamp listed in the Parts List will last around 20,000 flashes. That's over 20 hours of continuous at a high flash rate, and represents many rocket flights.

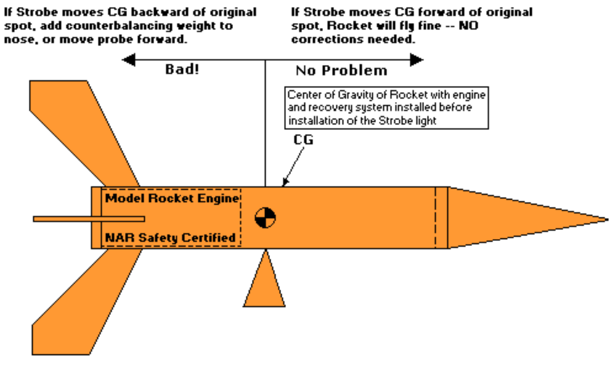

Fig. 6. If the electronics are forward of the model's Center of Gravity, the Rocket should fly fine with the added weight. http://www.uoguelph.ca/~antoon

To get the best efficiency, it's necessary to keep C4 close to Q1 (see Fig. 2). That ensures a "reservoir" of current to draw from as Q1 switches. Usually, Q1 does not need any heatsink. Different types of mini and micro transformers and component tolerances may necessitate a small heatsink on Q1 if it gets too hot to comfortably hold. Sometimes, due to winding differences, you will need to increase C4 to 470µF or 680µF in order for the PWM circuit to work efficiently. A 16-volt capacitor is satisfactory for use with a 9-volt battery.

Build the PWM part of the circuit first. You should test it before installing the hex FET and T1. That is easily accomplished by using a small speaker with a 10-µF capacitor attached to one lead. Connect the other lead to ground, and the free end of the capacitor to pins 6, 8, 10, and 12 of U1. By adjusting R4, you will be able to hear the volume of the tone getting louder or quieter as R4 varies the pulse width. Once the PWM circuit works, attach the mini transformer, using Figs. 2 and 3 as a guide to polarity. Use proper precautions to minimize static, and install Q1. The +300-volt output may be tested with a neon lamp. Resistor R4 varies the brightness of the lamp somewhat.

Put together the Strobe section of the circuit (see Fig. 4.) keeping in mind the high-voltage output of T2. Once you have all the parts assembled, it is a good idea to give the finished board and components several light coats of an insulating spray to prevent shorts and high-voltage arcing. A product such as "Acrylic Coating" (which has a dielectric strength of 2,000 volts per 0.001 inch) or other material for coating printed-circuit boards works well. Don't coat R4, or it won't work anymore! Also, don't spray anything on the flash lamp, although you may insulate the ends to prevent arcing outside the flash tube.

Testing:

Before installing the electronics in the rocket, and gluing everything down, check to see that the Strobe is operating correctly. With a 9-volt input and using the parts specified, you should see a flash every 4 seconds on the high setting, and about 30 seconds on the low setting of R4. **You'll note the first flash takes quite a while to appear (depending on the quality of C7), usually 10-15 seconds on high, and a few minutes on low.**

The reason for that is that C7, the large electrolytic that stores the energy to light the flash lamp, has to "polarize" if it has been sitting idle for a long while. Leakage within the capacitor is maximum when voltage is first applied, and it has to charge and discharge several times before leakage subsides and absorbs less power. If that problem exists, run the Strobe from another 9-volt battery before launch and wait until the flash rate goes up. Then, you may install your flight battery, and let 'er rip

If you can get accurate specifications, select C7 for low leakage. Most miniature, recent-style capacitors work fine. In our prototype Strobe, we left out an on/off switch, opting instead to simply install the 9-volt battery when launching. You may install a switch, or leave it out as desired.

Finally, remember to observe sensible practices when flying your rocket. If it gets caught in a power line, or high in a tree, leave it! No project is worth risking one's life! Fly in clear areas, especially for night launches, and observe wind direction, launch angle, expected trajectory, and landing site to optimize your changes of successful recovery. Happy Flying!

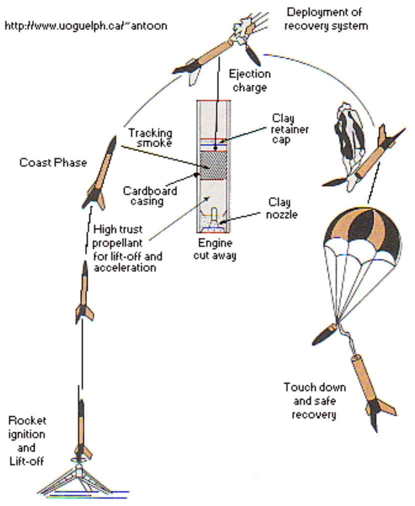

Fig. 5. Here is the flight sequence of the rocket along with a cut-away showing its engine components and their function.

Parts List and other components:

Semiconductors:

```
   Q1 = IRFZ20 Hex FET (Digi-Key IRFZ20ND)
   D1 = 1N4148, general purpose silicon signal diode
         D2 = 1N4007, 1A, 1000-PIV, general purpose rectifier diode
         U1 = CD4584 Hex Schmitt Trigger, IC
 SCR1 = T106D1, C106D1, ECG5457, NTE5457, etc. 400-volt/4-amp, sensitive gate
        Silicon Controlled Rectifier
```

Resistors:

All Resistors are 5%, 1/4-watt, unless otherwise noted.

```
 R1 = 6800 ohm (same as 6K8)
 R2 = 10,000 ohm (same as 10K)
 R3 = 820 ohm
 R4 = 1000 ohm, trimmer potentiometer
 R5 = 1000 ohm (same as 1K)
 R6 = 4.7 Megohm (same as 4M7)
 R7 = 3.3 Megohm (same as 3M3)
 R8 = 1 Megohm  (1M)
```

Capacitors:

```
 C1 = 0.022 µF, 10% stable temperature coefficient.
               (DigiKey P1016 or equivalent)
 C2 = 2200 pF, 20% stable temperature coefficient.
             (DigiKey P3222 or equivalent)
 C3 = 330 pF, ceramic disc (DigiKey P4106 or equivalent)
 C4 = 330 to 680 µF, 16WVDC, miniature electrolytic
 C5 = 0.033 µF, 250 WVDC (DigiKey E2333 or equivalent)
 C6 = 0.047 µF, 400 WVDC (DigiKey E4473 or equivalent)
 C7 = 33 µF (or value to suit, see text) 350 WVDC miniature electrolytic
```

Additional Parts & Materials:

```
 FL1 = Xenon Flash Lamp
 NE1 = NE-2 type, 120 volt neon lamp
  T1 = see text
  T2 = 4KV trigger transformer
Printed Circuit Board or perfboard materials, 9-volt alkaline battery,
battery holder, wire, solder, enclosure or shrink sleeving, etc.
```

For Radio Shack part numbers click on this RS data sheet.

I fully support this project. Most parts can be obtained via your local Radio Shack or Tandy store. I will answer all questions but via the message forum only. ***Tony's Message Forum*** can be accessed via the main page, gadgets, or circuits page.

Copyright and Credits:

The original project was written by Anthony Charlton. Reproduced from Hands-On Electronics, January 1989, by permission of Gernsback Publishing, Inc. Document updates & modifications, all diagrams, PCB/Layout redrawn by Tony van Roon. Re-posting or taking graphics in any way or form of this project is expressily prohibited by international copyright © laws.

Back to Gadgets page

Chute Control for Model Rockets

by Tony van Roon

"Deploy your rocket parachute after a pre-set, adjustable, time delay. This device is similar to the STX-10"

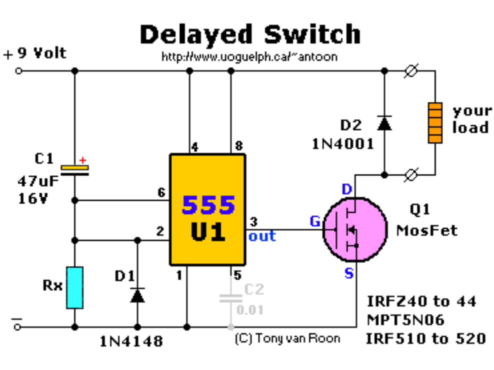

Parts List:

```
Rx = see text
C1 = 47µF, 16V.  Electrolytic or Tantalum
C2 = 0.01µF, ceramic (optional, depending on application)

U1 = MC1455P, LMC55CM, NTE955MC, or similar 8-pin CMOS timer.
Q1 = IRFZ42, MPT5N06, IRF513, or similar N-Channel MosFET. They all work.
D1 = 1N4148, NTE519, 1N914, etc. (optional)
D2 = 1N4001, 1N4002, 1N4004, etc.
```

When the 'Start' switch is pressed C1 will slowly charge via R1 keeping pin 6/2 high until it reaches 1/3 of +V and then switches low driving output pin 3 of the 555 open. Pin 3 will bias the gate of the MosFET Q1 and closing the solid-state contacts over the Drain and Source. The value of Rx can be determined with the formula **T = R x C** in seconds. Rx is in K, C is in Farads, T is in seconds.

Example: R=470K, C=47µF. Time = 470 x 0.047 = 22.09 seconds. Measured value at 9 volt was 21.2 seconds. If you know the time you can calculate the resistor value: R = T.C (Resistor value = seconds divided by capacitance).
A note on using the correct battery type; An regular 9 volt Alkaline battery is suggested. A 9 volt NiCad is not really 9 volt but rather 7.5 volt (1.25 per cell x 6).

The variation between calculated and measured value is due to component tolerances. To find an almost perfect match, use a 1Mega-ohm, 10-turn trimmer potentiometer and adjust the delay until you find the setting of your choice. Then measure the ohm's value of the trimmer pot and replace with a permanent resistor with a 2% (or better) tolerance. Use a metal-film if you can, they are more temperature stable and more precise. Same for the capacitor. A tantalum type is preferred if you need a precise delay time.
C2 is a regular 0.01µF (10 nanoFarad) filter capacitor but may not be needed. It is used to filter off noise in some applications like spikes coming from the brushes of an electric motor.

Use a low-power CMOS type for the timer to make the battery last longer. The regular 555 will also work, just needs more power. D2, the 1N400x diode, **is a must.** Otherwise backcross EMF flutter between the Drain and +V may cause accidental activation of the 'load'. You can fold this MosFet over the D2 diode to keep everything as flat as possible. This circuit can be powered by any voltage between +5 and +15V.

Only if you find that there is too much signal on the gate, insert a 150 ohm or so resistor between pin 3 and the gate of Q1. Below are the PCB and Lay-out for your convenience. I'm considering making a SMT version which shrinks the whole thing to less than the smallest postal stamp and very light.

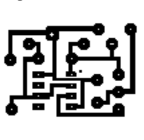

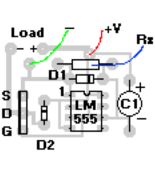

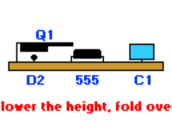

To lower the height, fold over Q1

I fully support this project. Most parts can be obtained via your local Radio Shack or Tandy store. I will answer all questions but via the message forum only. ***Tony's Message Forum*** can be accessed via the main page, gadgets, or circuits page.

Copyright and Credits:

Back to **R/C Gadgets** page

Ni-Cad Sensor for Heli

by Tony van Roon

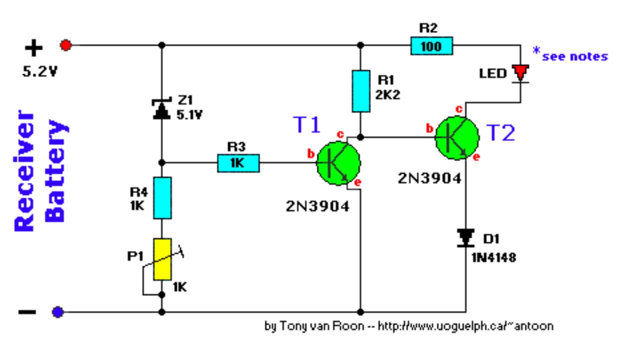

Parts & Description:

```
   R1 = 2K2
   R2 = 100
   R3 = 1K
   R4 = 1K
   P1 = 1K, adjustable (trim) potentiometer
T1,T2 = 2N3904, PN100, NTE123AP, or equivalent
   D1 = Zener diode 5.1Volt  (1N4733A, ECG5010A, NTE5010A, etc.)
   D2 = Small Signal Diode like the 1N914, 1N4148, NTE519, or ECG519
  Led = High- or Ultra Bright 'Jumbo' LED
```

The above circuit will illuminate an Ultra Bright (preferrable a Jumbo-LED) when the Ni-Cad voltage falls below a preset voltage level. The (Jumbo) Led has to be the *Diffused* type. This type seems to be the only desired color and is visible in daylight.
Cut-off point is adjustable with trimpot P1 somewhere between 4.2 and 5.2 volts, depending on your choice of components. However, I recommend a point between 4.6 - 4.8 volt. Circuit was designed to work with an application I used for my KALT helicopter, but ofcourse this sensor will work for anything else which use the standard 4.8volt nicad battery pack. Current draw is approximately 12 mA when the LED is on, standby current is 2mA or less. These specs are for the Red Led only.

The LED shoud be mounted where it is visible when the Heli is in-flight (hover). The circuit should be protected from the usual contaminants like fuel, oil and other dirt. Heat shrink and silicon adhesive are an excellent choice.
Parts are not critical but keep resistor tolerance at 5% or less.

I noticed that some types of Ultra- or High brightness Led's have their 'flat' side as anode instead of kathode so if you don't see any action from the led, just reverse. In general, the short leg or flat side of a led is the kathode. No damage will occur if the led is connected the wrong way.

Back to Gadgets Menu

Simple Night Blades

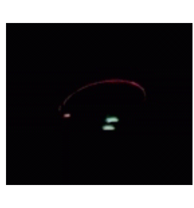

A set of very bright night blades can be made with the following components

Parts Needed

- Two lithium coin-type batteries - Eveready 2032 calculator cells work well.
- Several feet of adhesive metal foil tape for fiberglass blades, or thin wire for wood or G-Blades.
- Two Radio Shack "Super Bright" LED's - Part #276-087
- Fiberglass blade, "G-Blade", or a set of uncovered wood blades.
- Two Female Deans connectors. Each package contains two connectors
- Four Male Deans connectors. That's two packages.
- 1/8" heat-shrink tubing.
- Optional - Micro pushbutton momentary on switch
- Optional - 2" of lead wire, leftover blade weight works great
- Optional - plastic tubing that will fit over the end of pushbutton switch and allows a 1" lead wire to slide freely.

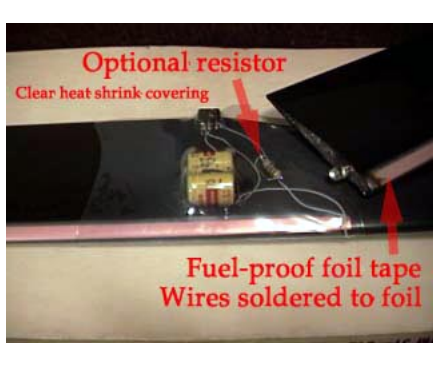

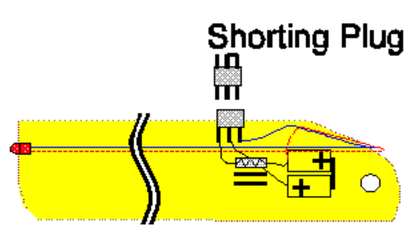

Be very careful to avoid shorting the batteries. The wire is routed through the middle of the blade if using G-Blades, or through a shallow trench on wood blades. If you are using metal foil, then you can carefully run it along the top and bottom leading edge of the blade. The components are mounted on the blade with "Shoe-Goo" style cement, and covered with heat shrink tubing. The Shorting Plug is the switch for the blade which finishes the connection between the + side of the battery and the anode of the LED. Mount a female Deans to the trailing edge of the blade and solder a short wire across the two matching pins on the male connector to make the shorting plug. If you want to be on the safe side, then add a 220 ohm resistor in series with the LED as shown in the drawing. I didn't for maximum brightness, and I haven't burned out an LED yet. The LED's have a 250 mph airstream to keep them cool.

Flying technique

Night flying is a lot easier than it looks. Besides the blades, you also need one light on each skid, and at least one on the tail boom. The simplest light source are Cyalume lightsticks, sold in camping and outdoor stores. Use nylon zip-ties to fasten a Cyalume to each skid, and one to the tail boom near the tail. I prefer a light on the top of the boom and one on the bottom. I also prefer the tail boom light be a different color than the lights on the skids.

Selection of flying site is important. The ideal site is flat with no obstacles, and no bright lights nearby. The darker it is outside the better. Lights on the horizon from streetlights or buildings can be very distracting. Watch out for nearby roads which offer the hazard of bright headlights.

The major thing to remember is that the ground is there, you just can't see it! Your buddy can stand by with a flashlite to iluminate the area when starting the heli, and also to to iluminate the landing area. Take it easy at first, and in no time you'll be doing all the maneuvers that you normally do during the day.

Is that too difficult? How about the 10 minute Night Blade!

Warning, this will not work in cold weather

Items Needed

- "G-Blade" fiberglass blades, preferrably yellow-green color for maximum brightness.
- 1 high intensity green or yellow Cyalume chemical lightstick.
- 1cc syringe and needle (talk to your pharmacist)

The G-Blade is the key to simplicity. Gary Wright flew a magnificent flight at the IRCHA Jamboree, grabbing first place using the procedure outlined here. What makes the G-Blade so special is that it's transparent and hollow, and it's actually designed to be able to hold a milliliter or so of liquid that can be injected through a pre-drilled hole in the root of the blade. 1cc of Cyalume liquid injected into the blade will collect at the tip when the rotor speeds up, and light the blade tips enough to show a clearly visible "Hula-Hoop" on a dark night. You should also attach a Cyalume lightstick to each of the skids, and at least one to the tail fin. This will provide the visual cue so you will always know the orientation of the helicopter.

Steps for G-Blades

- Activate the Cyalume light stick by cracking it and shaking it.
- Using a knife to cut off the top of the plastic shell.
- Draw 1cc of liquid with the syringe. It stains clothing so be careful.
- Inject at most 1cc into each blade just prior to flying.

For additional information contact Mark Johnson via E-Mail at mjohnson@minn.net or Compuserve user 73577,1302.
Anonymous FTP at ftp.minn.net/usr/mjohnson

Webmaster's comment: **If you have questions or need more info on this project, please contact the author *Mark Johnson*. The information contained in this document is the soul responsibility of the author and those who participate. Be advised that, unless done properly and great care is given, fiddling with the rotorblades can result in injury. Blades spin up to about 7500 rpm (or more) and anything improperly mounted on or near the blade tips *WILL* come off...with 'g-force'!**

Back to Gadgets' Menu page

Noise Trap for long Servo leads

by Tony van Roon

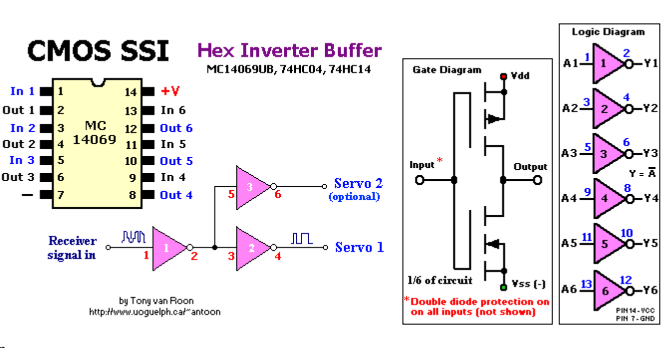

Introduction

What exactly is a 'Noise-Trap' you ask? A noise-trap takes care of noise or interference picked up by long servo leads. It filters a noisy signal into a sharp filter. Two examples are the rudder servo of a helicopter and the aileron servo of an airplane. Noise Traps (or filters) are normally located between the receiver and close to the servo.

ERROR FIX: The 10nF (0.01uF) capacitor goes *before* the 1K resistor and over the input voltage leads and NOT over ground and signal wire as previously indicated. Also, the 1K (1000 ohm) resistor goes between the positive '+' input lead and the connection to pin 14 of the IC and is part of the R-C filter. My apologies for this stupid drawing error.

Operation

The input signal (pulse) from the receiver is introduced at pin 1 of the CMOS chip MC14069UB and comes out at pin 2 inverted, gets put back on pin 3 of the second buffer, and gets out on pin 4 inverted again. Any noise or interference picked up by long servo leads will be cleaned up by the two inverter buffers. The 10nF (0.01uF) ceramic filter capacitor takes care of the tiny bits of noise produced by RF, inferior or noisy servo motors, or heavily used older servos no longer properly blocking feedback. If you're planning to use a 'Y' lead for your ailerons, then solder an other jumper from pin 5 to pin 3 of the MC14069U. The second output (pin 6) goes to the other servo, plus add another 10nF cap. The low input current is approximately 1µA (microAmp) for the MC14069U, I have not measured the current draw for the regular 4069U.
Also note that the IC *must* be a 4069**U** or 14069**U** type. This type is an unbuffered model and used because of the 1K resistor in series with Vcc. (Too many fets for one gate will probably result in malfunction.)

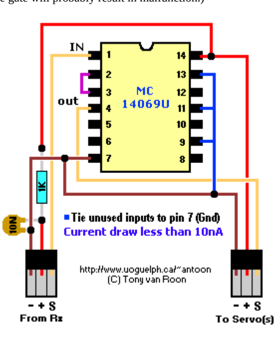

Inputs A	Outputs Y
L	H
H	L

Construction:

The noise-trap is very easy to construct and can be done on vero-board or any other point-to-point wiring you prefer. The only two major components are the 14069U CMOS IC and the 10nF (nanoFarad) filter capacitor. If you don't have a 10nF type just use whatever you have from about 470pF (picoFarad) and up. It is not all that critical. Just don't go overboard!
Make sure to tie all unused inputs to an appropriate logic level (ground or +). Unused outputs **MUST** be left open! There are six of these hex inverters in this chip and only three are used. The other three are spares or use them for something else. Before wrapping the Noise Trap with heat shrink tubing test it first to make there are no wiring errors.

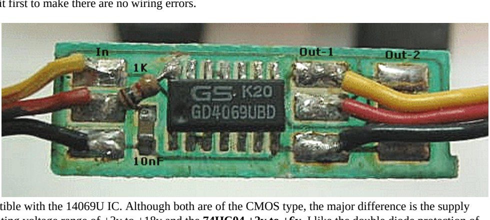

A direct substitute is the 74HC04 or 74C04 which is pin-compatible with the 14069U IC. Although both are of the CMOS type, the major difference is the supply voltage. The high-impedance MC14069UB can handle an operating voltage range of +3v to +18v and the **74HC04 +2v to +6v.** I like the double diode protection of the MC14069UB. On the other hand, the 74HC04 has higher noise immunity characteristics. The chip complexity of the 74HC04 is: 36 FET's or 9 equivalent gates. Do **NOT** try to use the regular 7404 or 74LS04. They are not the same and behave different then the 74HC04.
This 14069U (or 4069U) chip contains protection circuitry to guard against damage due to high static voltages or electric fields. However, make sure not to exceed the maximum rated voltage levels.
The MC14069UB hex inverter is constructed with MOS P-channel and N-channel enhancement mode devices in a single monolithic structure. These inverters are excellent where low power and/or high noise immunity is desired. There are six inverters available and each of these six inverters is a single stage to minimize propagation delays.
I have not experimented with Schmitt Trigger devices (MC14106B, 14584B, 74HC14, etc) which were specifically designed to eliminate noise, but are much more expensive.

The enlarged picture above shows the surface mount SOIC version, and outputs for two servos. True size is 1/4" x 3/4".

Back to Gadgets Menu page

Please follow this link. You will be sent there in 2 seconds.

R/C Plane Locator and Voltage Watch (PPM & PCM)

The R/C Plane Locator is an audio beacon used to locate r/c aircraft in hard to find places. As many have already experienced, locating a downed plane in a field of tall grass can be very difficult. Or perhaps you don't know if you should be looking up in the trees or down between the bushes. The RCPL will assist you by playing a tri-note beacon and flashing an LED. Listen for the sound and you will have an aid in locating your vehicle. Don't wait until you've lost a plane to build one, by then it's too late.

What makes the RCPL different then other Plane Locator devices? Well most importantly is that it will work with PCM receivers. So far, all of the ones currently on the market or plans on the web do not. It also incorporates a low voltage detector. When the battery goes below 4.4V and longer tri-note audio beacon will sound and the LED will flash to let you know it's time to land.

When in "plane down" mode, the beacon will sound every 5 seconds as long as the batteries remain fully charged (4.8V and over). As the battery goes down in voltage the period between beacons is extended, saving battery power to enable the RCPL to keep beaconing as long as possible. Using an average 600mah battery pack, the RCPL will beacon for over 12 hours. At that point beacons are emitted at intervals of approximately 1 minute.

Setting up the RCPL for PCM requires the use of a spare channel on your R/C receiver. Insert the servo lead into a spare channel. Go to the settings mode of your R/C transmitter and raise the endpoint and sub-trim for that channel to its maximum setting. In the failsafe (F/S) setting, set that channel to go to the maximum when F/S is engaged.

Now you will have two ways to engage the RCPL. First by simply raising the channel's control to the maximum setting or by turning off your radio.

Building the RCPL is very easy and can be done using Vero board. There are only 10 components.

RCPL uses Microchip's PC12F675 with internal 4Mhz oscillator and ADC pins.

The code for the 12F675 was written in PicBasic Pro. A HEX file is also available if you do not have the compiler.

There is one small issue when burning the 12F675 with the hex file. A calibration value for the internal oscillator is stored in the last word of code space by Microchip when it leaves the plant. That word needs to be read from the PIC before anything else and then placed in the last word of the hex file (at position 7FE-7FF).

All files are avalaible for download via a web interface to the anonymous cvs server at: SourceForge.

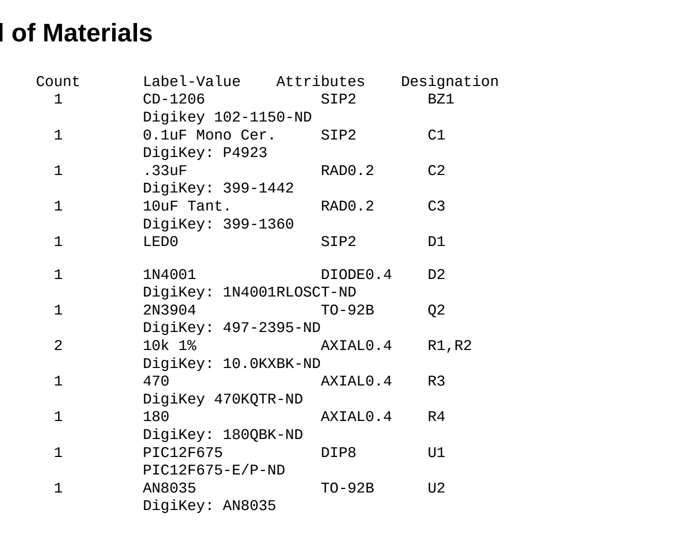

Bill of Materials

Item	Count	Label-Value	Attributes	Designation
1	1	CD-1206 Digikey 102-1150-ND	SIP2	BZ1
2	1	0.1uF Mono Cer. DigiKey: P4923	SIP2	C1
3	1	.33uF DigiKey: 399-1442	RAD0.2	C2
4	1	10uF Tant. DigiKey: 399-1360	RAD0.2	C3
5	1	LED0	SIP2	D1
6	1	1N4001 DigiKey: 1N4001RLOSCT-ND	DIODE0.4	D2
7	1	2N3904 DigiKey: 497-2395-ND	TO-92B	Q2
8	2	10k 1% DigiKey: 10.0KXBK-ND	AXIAL0.4	R1,R2
9	1	470 DigiKey 470KQTR-ND	AXIAL0.4	R3
10	1	180 DigiKey: 180QBK-ND	AXIAL0.4	R4
11	1	PIC12F675 PIC12F675-E/P-ND	DIP8	U1
12	1	AN8035 DigiKey: AN8035	TO-92B	U2

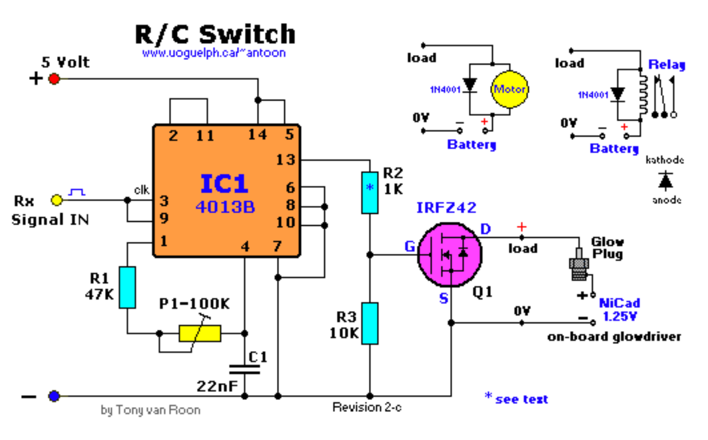

Parts List:

All resistors 1/4 watt & 5% tolerance, unless otherwise posted.

```
R1 = 47K           IC1 = MC14013B
R2 = 1K             Q1 = BUZ11, IRFZ42, NTE2395, or ECG2395
R3 = 10K            S1 = on/off switch (optional)
P1 = 100K          Servo lead
C1 = 22nF
```

Description:

The circuit, as described above, is a so-called "Radio Controlled Electronic Switch". It can be used to switch on/off anything electrical, whatever it is. Here are a couple of examples: navigation lights, landing gear, sound systems, glowplug driver, bomb release, parachute, search lights, gyros, and so on.

Hart of the circuit is a CMOS Dual 'D' Flip-Flop MC14013B. The input Flip-Flop is designed as a monostable pulse generator by means of R1, P1 and C1 connected between 'Q' and the RESET input, which produces a preset pulse-length set by the adjustable potmeter and starts at the rising edge of the input pulse. When this monostable times out it's inverted 'Q' signal goes high and clocks the output stage of the Flip-Flop, which is used as a normal type 'D', to sample the input pulse. If the duration of the input pulse is longer than the preset monostable pulse, then a logic high level will be clocked to the output of the 'D' type. A shorter input pulse will cause a logic low to be clocked to the output. In short, both halves of the IC perform two different logic funtions.

The output drives the output device which in this circuit is the IRFZ42 TMOS FET. It needs only 2-volt on it's gate to fully turn-on and has an rDS-ON resistance of only 0.028 ohm. To invert the operation of the r/c switch, you can connect R2 either to pin 12 or 13 of the MC14013B. This circuit is easy in design and to built and can easily be done using vector board, vero-board, or whatever. My unit measures 5/8" by 1-1/4" but I know I can do a lot smaller by choosing smd components, probably 3/8" x 1/2". You can use a case or heat-shrink; I used the latter. This unit is not ment as a motor-switch for electric flight.

Adjusting the switch: **To test the unit hookup a light and a battery, making sure the + of the battery goes to the Drain of Q1. Adjust the potmeter P1 to somewhere in the middle and set the transmitter function of your choice (say the throttle) to the point where you wish to switch the unit. Now adjust the potmeter P1 to the point the light comes on. If it does, your unit functions properly and you can play with whatever other setup you have in mind. If you intend to use this unit as a on-board glowdriver, make sure to use havy wiring between glowplug, battery and r/s switch. A 'Y'-lead to the throttle servo is required. If you use this unit to switch relays or a small dc-motor, then a 'spark eliminator' diode (1N4001) is required. Cathode of the diode goes to the '+' side of the battery. (See diagram).**

At the left you see the SMT version, measuring 15mm x 17mm!

Final Word:

The IRFZ42 is a TMOS Power FET. They can be pricy ($12 Can). Other substitutes like the IRFZ44 will work too. Watch for static discharge with this one!
IC1, the MC14013B, is a CMOS SSI type Dual Flip-Flop. It features a direct pin-for-pin replacement with the CD4013B, NTE4013B, ECG4013B, and others.
The output signal can be inverted by selecting either pin 12 or 13. To make life easier, you could install a miniature on-on switch. The middle contact going to R2, and pin-12 & 13 to the other two contacts.

Original author of the circuit diagram is Ken Hewitt. I modified it somewhat because we can't get the BUK555-60B (Q1). Ken also has a way to put the circuit on a strip-solder board. Check it out! Please visit Ken's website at: http://www.welwyn.demon.co.uk/

Back to Gadgets Menu page

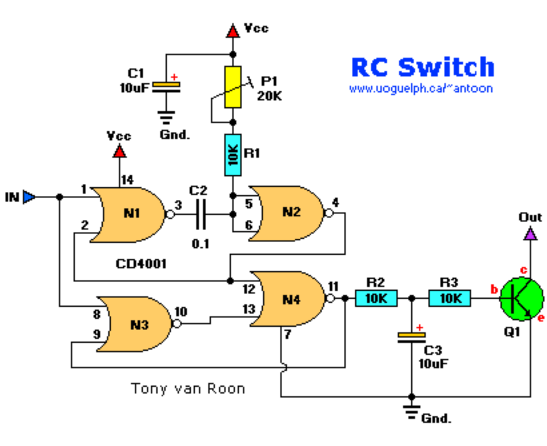

Parts List:

```
R1,R2,R3 = 10K
      P1 = 20K, multi-turn trimmer pot
   C1,C3 = 10µF, 16V
      C2 = 0.1µF (100nF)
     IC1 = CD4001 CMOS
      Q1 = see text
```

Description:

This is a simple electronic switch to replace a servo and micro switch to do the on-off switching.
Connect the input to a spare receiver channel, like 'Gear', or any other. Adjust P1 for the setting you want on any proportional channel. The 'Out' pin of the collector of Q1 goes to relay if you switch a battery load on/off.
For Q1, use any suitable type to switch your relay. I used a regular 2N2222A + 5A relay for the job (on/off switching a 12V/2A battery pack).

Back to Gadgets Menu page

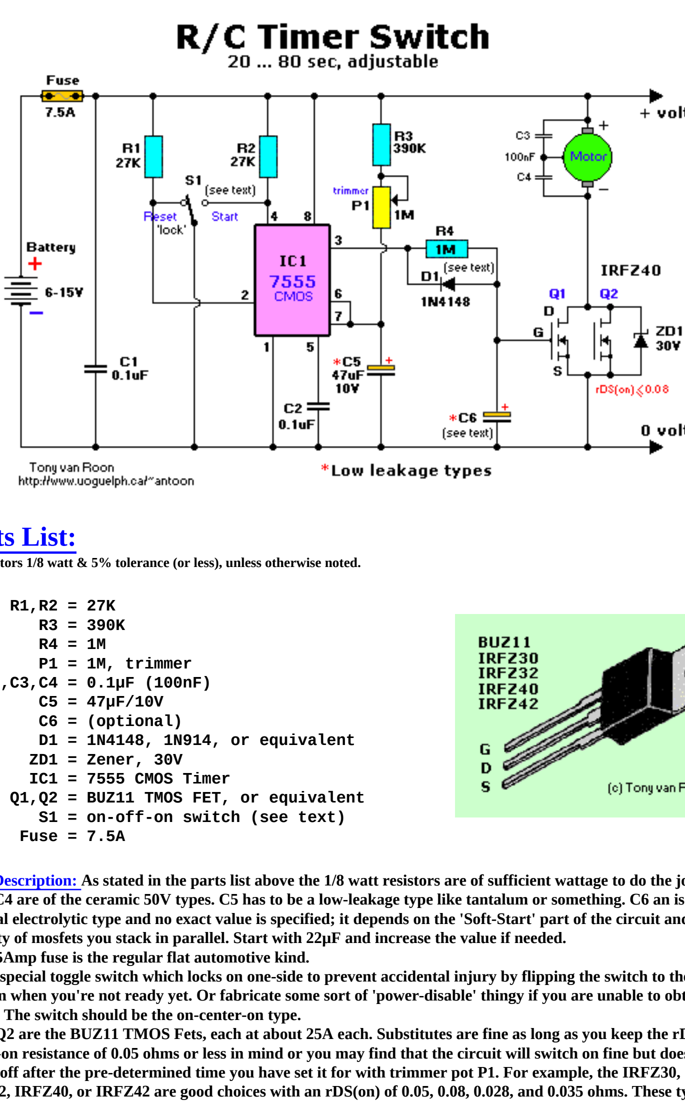

Parts List:

All resistors 1/8 watt & 5% tolerance (or less), unless otherwise noted.

```
      R1,R2 = 27K
         R3 = 390K
         R4 = 1M
         P1 = 1M, trimmer
C1,C2,C3,C4 = 0.1µF (100nF)
         C5 = 47µF/10V
         C6 = (optional)
         D1 = 1N4148, 1N914, or equivalent
        ZD1 = Zener, 30V
        IC1 = 7555 CMOS Timer
      Q1,Q2 = BUZ11 TMOS FET, or equivalent
         S1 = on-off-on switch (see text)
       Fuse = 7.5A
```

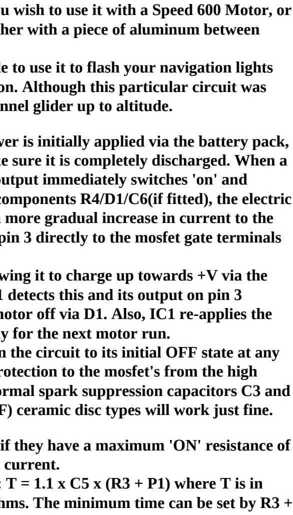

Parts Description: As stated in the parts list above the 1/8 watt resistors are of sufficient wattage to do the job.
C1 to C4 are of the ceramic 50V types. C5 has to be a low-leakage type like tantalum or something. C6 an is optional electrolytic type and no exact value is specified; it depends on the 'Soft-Start' part of the circuit and quantity of mosfets you stack in parallel. Start with 22pF and increase the value if needed.
The 7.5Amp fuse is the regular flat automotive kind.
S1 is a special toggle switch which locks on one-side to prevent accidental injury by flipping the switch to the 'start' position when you're not ready yet. Or fabricate some sort of 'power-disable' thingy if you are unable to obtain this switch. The switch should be the on-center-on type.
Q1 & Q2 are the BUZ11 TMOS Fets, each at about 25A each. Substitutes are fine as long as you keep the rDS switch-on resistance of 0.05 ohms or less in mind or you may find that the circuit will switch on fine but does not switch off after the pre-determined time you have set it for with trimmer pot P1. For example, the IRFZ30, IRFZ32, IRFZ40, or IRFZ42 are good choices with an rDS(on) of (0.05, 0.08, 0.028, and 0.035 ohms. These type mosfets have a so-called 'Power Enhancement Mode' feature. Especially the IRFZ40/IRFZ42 are 46/51Amps which probably allows you to get away with one mosfet only. They are however a bit more expensive.
R4, D1, and C6 are optional for a soft start. If you don't require the soft-start then leave them out. C3 & C4 are wired straight across the motor terminals for spark suppression which every electric motor generates. Not needed of course (but does no harm) if you use a brushless motor. The 30V zener diode D2 is to protect the mosfets from transients.
It is recommended you use a CMOS timer for IC1 because the regular bipolar 555 uses too much current.
Your choice of substitutes for Q1 and Q2, if you can't find the BUZ11, has to switch comfortably 6 amps each. That is 12 amps total. If more output current is needed for a different motor than the Speed-400 and others, fit more mosfets in parallel by stacking them together on top of each other with small aluminum pieces, no heatsink is required.

How it works: The circuit is ment for a Speed 400 Motor or similar. If you wish to use it with a Speed 600 Motor, or a type which is even more powerful, stack more mosfets on top of each other with a piece of aluminum between each layer for cooling.
The configuration is not only limited to an electric motor. You may decide to use it to flash your navigation lights for a certain time or whatever else you have in mind. Use your imagination. Although this particular circuit was designed for Free-Flight electrics it can also be adapted to get your 2-channel glider up to altitude.

The hart of the circuit is the CMOS Timer/Oscillator IC 7555. When power is initially applied via the battery pack, the output (pin 3) is switched off and a short circuit applied to C5 to make sure it is completely discharged. When a momentary 'start' signal is applied via the S1 toggle switch to pin 2, the output immediately switches 'on' and activates the TMOS FETS Q1 & Q2 and concurrently, via the soft start components R4/D1/C6(if fitted), the electric motor. The 'soft-start' slows down the switching of the mosfets giving it a more gradual increase in current to the motor. If the 'soft-start' is not required omit these components and wire pin 3 directly to the mosfet gate terminals 'G'.
The start signal also causes IC1 to remove the short circuit from C5, allowing it to charge up towards +V via the timing resistors R3 and P1. When the voltage across C5 reaches 2/3V IC1 detects this and its output on pin 3 switches 'off', consequently switching immediately the mosfet's and the motor off via D1. Also, IC1 re-applies the short circuit across C5 and the circuit returns to its initial condition ready for the next motor run.
Applying a 'Reset' signal to pin 4 (momentarily or permanent) will return the circuit to its initial OFF state at any part of the ON cycle. Zener Diode D2's function is to provide transient protection to the mosfet's from the high frequency transients that all DC Motors generate, and do not omit the normal spark suppression capacitors C3 and C4. Wire them directly from the motor terminals to its case. 0.1uF (100nF) ceramic disc types will work just fine.

As I mentioned before, MANY other N-Channel MOSFETS are suitable if they have a maximum 'ON' resistance of approximately 0.05 ohms (0.08 ohms is fine) and can handle the required current.
If you wish to change the "ON" time to suit your needs, use this formula: T = 1.1 x C5 x (R3 + P1) where T is in seconds, C is in microFarads, and R in Mega ohms, e.i. with P1 set to 0 ohms. The minimum time can be set by R3 + P1. If only a fixed time is required, omit P1 and set it by a value of R3. As the 'OFF' current is only about 0.5 milliAmps it is not necessary to disconnect the battery between flights, but do so at the end of a session.

This is such a very simple circuit it can be easily and smaller soldered onto a piece of perfboard using point-to-point wiring with at least 0.4mm wire. So there is no pcb available and I don't have plans to make one. The layout suggestion, however, gives you an idea how to best place the components but feel free to use whatever other layout you have in mind.

Final Word: Once you flip the switch to 'Start' and let go of the aircraft you have very little control. It is imperative to fit a fuse to prevent burn-outs of the electric motor, battery, or plane if the thing noses in and the prop stalls. The 7.5 amp flat automotive fuse is suitable for most applications using the Speed 400. *Adjust the fuse* to a higher value if you use a Speed 600 or better motor.
As specified in the 'Parts Description' section, switch S1 is a center-off change over with the *Start* side non-locking. Again, if you are unable to obtain a locking-switch, tinker something else together to prevent personal injury from accidental activation of the motor.
CAUTION! CMOS and MOSFET devices are static sensitive and *WILL* be damaged by zapping them with ESD (Electro Static Discharge) coming from handling these parts with your unprotective hands. Leave them in the anti-static bags in which they are sold to you until you need them. Be also aware if a sales clerk from an electronics store tries to sell you these devices not packaged in some sort of anti-static packaging. Just refuse the sale and ask for a properly packaged item.

This circuit is not completely of my own design, the original editorial was featured in one of the major r/c magazines a couple years back but I can no longer recall which one... So any credits go to the author.

Testing: Re-check your whole project against the circuit diagram, check wiring, and check again. For an initial test, use a low-wattage automotive bulb in place of the motor. Connect the battery (watch polarity), the bulb should be off. Set P1 to minimum and momentarily throw S1 to 'Start'. The bulb should be switched ON (if the soft start components are installed there will be a short delay) and remain on for approximately 20 seconds. Set P1 to maximum and repeat the procedure above, the bulb should stay on for about 80 seconds. Keep in mind that these times are *approximate*, due the tolerance of components used especially C5. At any time in the ON period, the bulb should switch OFF when S1 is operated to the RESET position. Replace the bulb with the motor and prop of your choice, and run the cycle again. The MOSFET's should remain cool during the entire maximum motor run.

Direct Drive		2:1 Gearbox	
6x3	6.6A	7x6	3.4A
6x4	7.6A	8x6	4.6A
7x4	9.1A	9x6	6.6A

The following current consumptions may be of interest, they were taken with standard 7.2V Simprop Power 400 running on 7-cells (8.4V) and turning an assortment of plastic props.

Back to Gadgets Menu page

Receiver (Rx) Regulator

by Tony van Roon

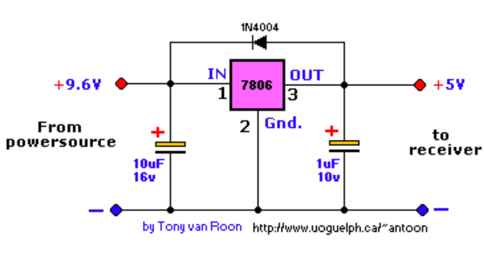

Parts List:

```
C1 = 10µF/16V     IC1 = LM7805 or LM7806 (see text)
C2 = 1µF/10V      Cooling for IC1 (optional)
```

A Couple Notes:

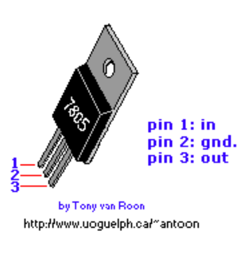

o This is a very simple circuit but will down convert to the required receiver voltage more than adequately. For 6 volt receivers, use a 7806 regulator. If you feel that the regulator gets too hot, install a coolrib on it. But that would be highly unlikely, since receivers don't draw that much power an dthe 7805 can easily handle 1 amp, so I don't think a coolrib will be necessary.

o Designed for an electric aircraft. To save on weight and eliminate the extra rx-battery, the receiver is fed from the same battery (8 cell, 9.6v) as the electric motor. The two capacitors are used to filter-out possible spikes when the electric motor is switched on or off. A BEC or similar device is highly recommended. In fact, this simple circuit was created per request of a club member who uses this device in combination with a bec.

o Note: The 7805 regulator may not give exactly 5 volt but rather something arround 4.5 - 4.9 volts. Depending on the receiver (can it handle 6v?) I would recommend a LM7806 instead. This will give between 5.56 and 5.9V depending on the manufacturer. All other components values remain the same.

Back to Gadgets Menu page

Dot/Bar Rx Voltmeter

by Tony van Roon

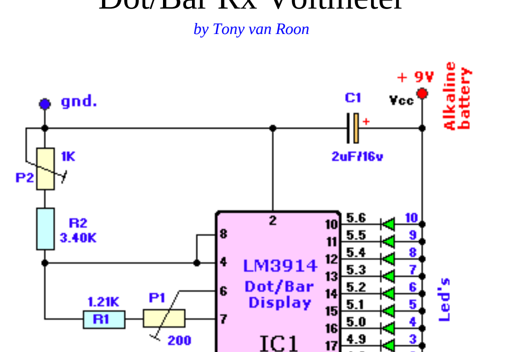

BUGFIX: ***Pin 3 error: Pin 3 goes to Vcc and point 'A'. Not pin 11 as previously indicated (Thanks Petr).*** *I will redesign the circuit shortly and do away with the 1% resistors and the tantalum cap.*

Parts & Description:

```
   R1 = 1.21K - 1%, precision
   R2 = 3.40K - 1%, precision
   P1 = Trimmer-pot, 200 Ohm
   P2 = Trimmer-pot, 1K
   C1 = 1.5 - 2.2µF/16V  (Tantalum or low leakage)
  IC1 = LM3914 - Dot/Bar Display Driver
 Leds = 8 Green, 1 Yellow, 1 Red, ultra-bright, 3mm
   J1 = Jumper for either Dot or Bar display
 MISC = 9 volt alkaline battery (no nicad!)
```

Final Notes:

This circuit was designed to work with a nine volt *alkaline* battery but can be modified to work with 4.5 - 25 volt. Over 10 volt increase potentiometer P2 to 2000 ohm. For voltages over 12volt you have to experiment with a different value. Don't get confused between the Vcc (pin 3) and Signal Input (pin 5) voltages. Vcc is your supply voltage and the Signal Input is where you put whatever you wish to monitor, which is in my case the receiver nicad battery pack in my helicopter.

Place a digital voltmeter between pins 4 (Divider Low) and 6 (Divider High) and adjust P1 for 1.20 volt. Then connect a power-source (like a powersupply) of 5.6V to Rx input (pin 5) and adjust P2 until the red led just lights up. Disconnect the power-source and connect a fully charged receiver battery pack. At full charge LED 10 or 9 should be on. Keep adjusting unil *YOU* are satisfied. If you want a more precise adjustment, get 10-turn trimmer pots.

This project works quite good when build on perforated board. LED 1 is ***Red,*** LED 2 is ***Yellow,*** LED 3-10 are ***Green***. But then again, choose whatever led-color scheme you like. The yellow and green leds use a bit more current than the red.

In regards to the pcboard; it is not to scale. It is approximately twice the size of the original (couple pixels bigger). If you choose another voltage than the 9Volt adjust the R1/R2 value and the voltage of C1 values accordingly.

For those who like to use a printed circuit board, use the suggested one below...

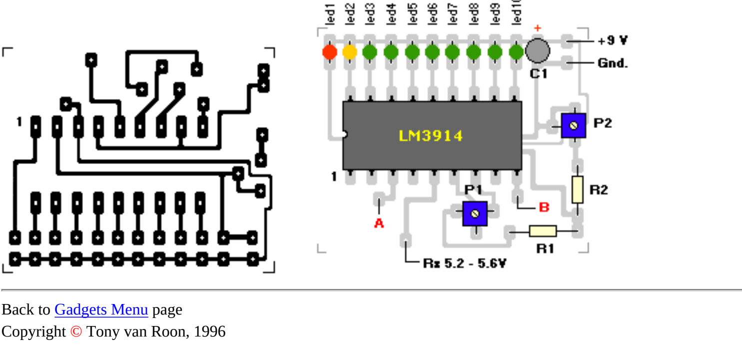

Back to Gadgets Menu page

Make Your Own Simple Rx/Tx Battery Charger with Peak Detect
by C. Blaurock

Introduction

This circuit is designed to peak charge Rx and Tx batteries. It's programmed for a C/2 charge rate for 250mAh and 500mAh batteries (charge currents of 125mA or 250mA). It'll charge Rx from 12V at the field, Tx from a 15V supply (like a car w/engine running). Use a 15-18V supply to charge at home (you should be able to find wall cubes with this rating). It is based on a Maxim IC, the MAX713, which is available mail order from suppliers like DigiKey.

Operation is as follows:

1. the circuit is designed for Vin = 15V at ~0.3A. LED D2 indicates the unit has power.

2. SW1 sets the charge current for 250mAh or 500mAh packs.

3. SW2 programs the number of cells to 4 or 8 (an incorrect setting will cause peak detection to fail and will probably damage the pack).

4. fast charge starts as soon as the pack is connected. LED D3 indicates fast charge.

5. fast charge stops, and C/16 trickle charge begins, when the unit detects a battery voltage peak OR the unit times out after 132 minutes.

Notes on the above:

1. Vin should be about 1.7V/cell+1.5V. For an 8 cell Tx pack you need a 15V supply. A 9V supply will work if you are only doing 4 cell Rx packs. Try to get at least a 0.5A supply to be safe. Vin should not exceed 20V. If you want to have Vin greater than 20V, see the data sheet. (You'll need to add two components and make sure all components can handle the voltage. Also check that the transistor T1 can dissipate the extra power).

2. The resistors Rs1 and Rs2 set the charge current. If you want to do other size packs, you can change the charge current according to the relation

Icharge = 0.25V / Rs

e.g. as designed Rs = 2ohm (SW1 open) or 1ohm (SW1 closed). You can replace Rs1 and Rs2 or figure out another switching arrangement to do more than two currents.

3. you can do other pack sizes (e.g. 5 cell) by connecting PGM0 and PGM1 appropriately to V+, REF, BAT-, or leaving them open. Don't do this without studying the data sheet, or you'll kill the pack.

4. the MAX713 chip has an undervoltage detect. If the pack voltage is below 0.4V/cell when you connect it, it will start in trickle charge mode until voltage reaches 0.4V/cell then go into fast charge.

5. The unit may timeout before peak is detected (this is because not all the energy put into the battery gets converted to charge). This should only happen if the pack was almost completely depleted at the start, and it should be within 80% of full. To be sure you have the peak you can restart the fast charge (unplug then plug the pack in). You COULD add a push-open switch to open BAT+ or BAT- so that you don't need to unplug the pack to restart (I didn't think it was worth it).

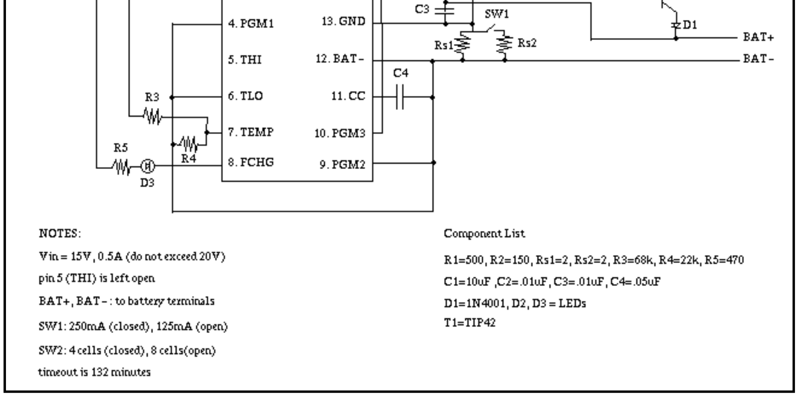

Construction notes:

I laid the circuit out on perfboard, sized to fit in a 1x2x4in Radio Shack project case. Use a DIP socket, don't solder directly to the MAX713 pins.

I didn't use a heat sink on T1. I don't think it will need it, follow your judgement if you think otherwise.

I got the Rx and Tx connectors from an old wall cube charger.

Put in some kind of test points for BAT+ and BAT- (I used banana plug sockets).

I bring in Vin and GND through a power plug, so I can plug into the 15V supply at home, but unplug and take only the small case to the field. It'll charge an Rx pack off a 12V battery. It will do the Tx off a car battery with the motor running.

Try the circuit out on some batteries/packs you can afford to lose. Use it on your pride and joy only after you know it's working correctly.

ACKNOWLEDGEMENT: this circuit was designed using information contained in the MAX713 data sheet.

DISCLAIMER: I'm not an EE and I don't design circuits for a living. This circuit SHOULD work for you, but I make no guarantees. Test it carefully.

C. Blaurock,
carl@kilimanjaro.mit.edu

Back to Gadgets Menu page

Simple Constant Current Source

by John Nooyen

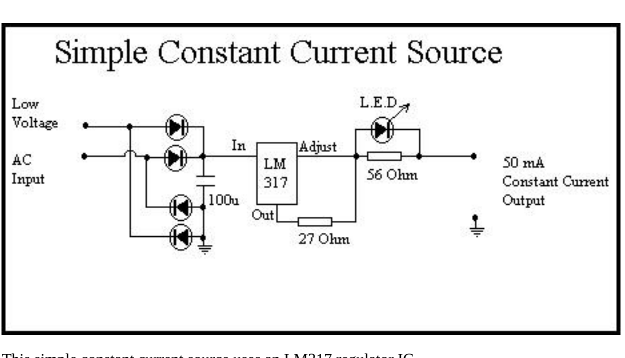

This simple constant current source uses an LM317 regulator IC.
N.B. The pin-outs of the IC are not a mistake, the output is taken from the adjustment pin.
I found this circuit to charge all my NiCad batteries, and I use a Kambrook mechanical light-timer (or equiv.) for 110vac to time the charge.

The reason I use a mechanical timer is:
A: You can remove all the "ON" pins, and just have one pin in an "OFF" hole. This allows you to set the timer for 14 hrs, then it will switch off and never switch on again.

B: If you get a power failure, the timer will stop. When the power is restored, the timer will continue and the pack will get its 14hrs charge. (Digital timers have a battery and you will miss out on charging for the time the power is interrupted, so you cannot guarantee that the pack has received its full charge time.)

Cautions:

1 - Ensure the voltage accross the capacitor is at least 3V higher than the highest output voltage required, and no higher than 37 volts accross the IC. A tx pack on charge can reach 14 volts.

2 - You can play with the 27-ohm resistor to change the current for other applications, however the 56 Ohm should also be changed so that the voltage across the LED is 1.5 volts. (So you don't get a SED (smoke emitting diode))!

3 - Mount the IC on an adequate heatsink for the power it will be dissipating.

Back to Gadgets Menu page

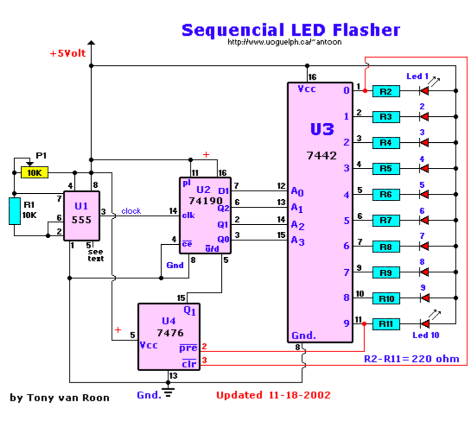

Parts List:
U1 = LM555 timer/oscillator
U2 = 74LS190
U3 = 74LS42
U4 = 74LS76
P1 = 10K
R1 = 10K
R2-R11 = 220 ohm
C1 = 100nF, ceramic
10 LED's, high brightnes or ultra-bright

ERRORS FIXED 11-18-2002: Pin 1 of the 555 should go ground and not via a capacitor. Pin 5 is normally not used but can include a small ceramic capacitor to filter noise. There were two pin-8's on the 74LS42 and should have been pin 8=ground and other pins are pin 9(was 8), 10(was 9), and 11(was10). Pins 2 & 3 of the 74LS76 (IC4) were labeled wrong also. They are corrected to 'pre' and 'clr'. Also, pin 2 of the 7476 goes to pin 1 of the 7442 and pin 3 of the 7474 goes to pin 11 of the 7442 (was connected to the resistor end). Tim's pcboard correctly indicates the changes, so pcb is correct! Checked my old emails and Tim's one was there indicating the errors. Just forgot to make the changes (red face).
Thanks to Mark, Tim, and Angel everything seems okay now!

Notes:

U1, the 555 timer/oscillator clocks a 74LS190 up/down counter (U2). The 74LS190 drives a BCD decoder driver 74LS42 (U3). The 74LS76 has as task to reverse the count on 0 to 9 to 0 and so on. P1 sets the up/down counter speed. R2 to R11 are all 220 ohm carbon-type resistors.
You may have noticed in the diagram it does not specify the 'LS' (Low Schottky) IC types but done for simplicity reasons. If your circuit is powered from a battery you definately should use the LS versions as the current draw is significantly less and so your battery pack will last longer. Same for the 555; use the cmos version to cut down on power.
Click here **LM555** for more information and data on the 555 timer/oscillator IC. Keep wires as short as possible since too long wires may be a cause for interference (RFI).

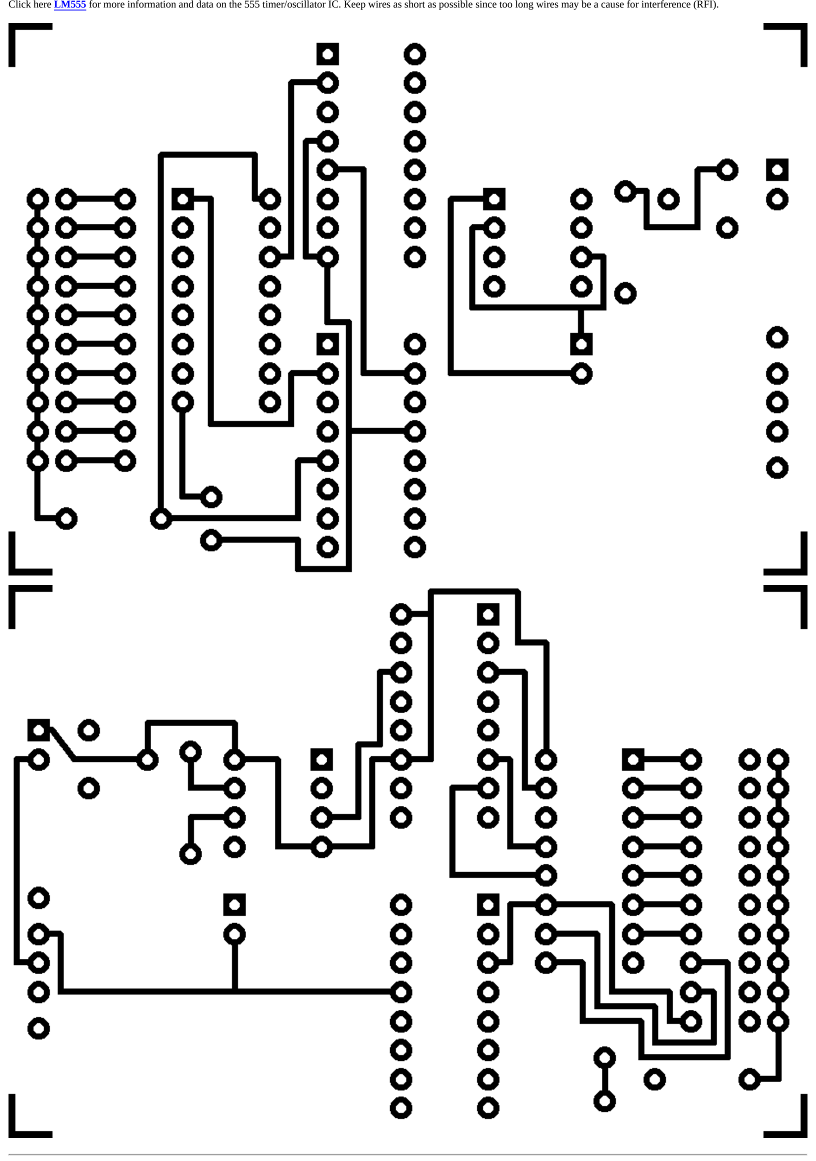

Back to Gadgets' Menu or Circuits Page

Servo Pulse Generator

by John Nooyen

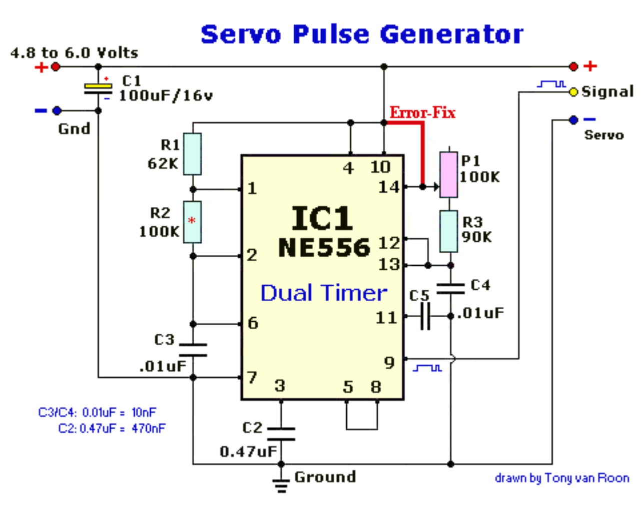

Parts & Description

IC1= NE556 Dual Timer (or equivalent)	R1=62k
C1= 100uF/16V (Electrolytic)	R2=100k*
C2= 0.47uF (ceramic/npo, 470nF)	R3=90k
C3,4,5= 0.01uF (ceramic/npo, 10nF)	P1=100k potmeter (linear)

Miscellaneous: Perf board, DC adaptor 6V, ic socket 14pin, case, knob, wire, solder, soldering iron. The "out" pin(5, 9) is the control or signal wire. For most servos this is either orange, white or yellow. *John also suggests to try to lower the value of R2 to 100ohms instead of 100K. I would say experiment with values between a 100 and 2700 ohms and stick with the one that works for you.
Data sheet for the 556 timer is available, just click on NE556 in 'Parts & Description'.

Notes:
This circuit is from John Nooyen's good website (with permission). The original drawing had an error and failed to pulse. This is now fixed with a connection from pin 4 & 10 to pin 14 or + 5V.
Apologies for the inconvenience to those with minor experience in electronics. The Servo Pulse Generator is very handy to judge the servo travel without going through the hookup of the Rx and Transmitter and all the messy wiring.

Back to Gadgets Menu page

Servol Pulser

by Tony van Roon
http://www.uoguelph.ca/~antoon

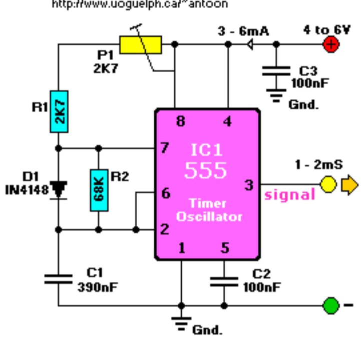

Parts

```
IC1 = LM555 Timer   R1 = 2K7
 C1 = 390nF         R2 = 68K
 C2 = 100nF         P1 = 2K7, potentiometer
 C3 = 100nF         D1 = 1N4148, signal diode

Misc: Perf board, adapter 6Vdc, IC socket, case,
      knob, wire, solder, soldering iron.
```

Description

The normal duty-cycle for a 555 is always 50% or more. RC time to charge is always larger than the discharge time, because during charge-time the discharge resistor is in series with the charge resistor. A servo however needs less than a 50% duty-cycle so that we can vary the pulses between 1 and 2mS (milliseconds) with a repeat frequency of 50Hz. (One periode equals 20mS) so a duty-cycle of 5 to 10%. By adding one diode over R2 and changing position of the charge resistor this problem is solved.

The charge-time, and therefore the time that the output is 'high' ("1") is set by P1 & R1 and the discharge-time is set by R2. They can be choosen independently from each other. The circuit is designed in such a way that varying the resistance (over D1) from 2K7 to 5K4 a pulsewidth gives from 1.0 to 2.0 mS by adjusting potmeter P1. The output pin(3) is where the signal wire goes. For most servos this is either orange, white or yellow.
The red wire of the servo, and the battery, goes to '+' and the black or brown servo wire, and the battery, goes to '-'.
Data sheet on the LM555 timer is available, just click on LM555 in 'Parts & Description' section.

Back to Gadgets Menu page

Tail Anti-Collision Light

by Tony van Roon

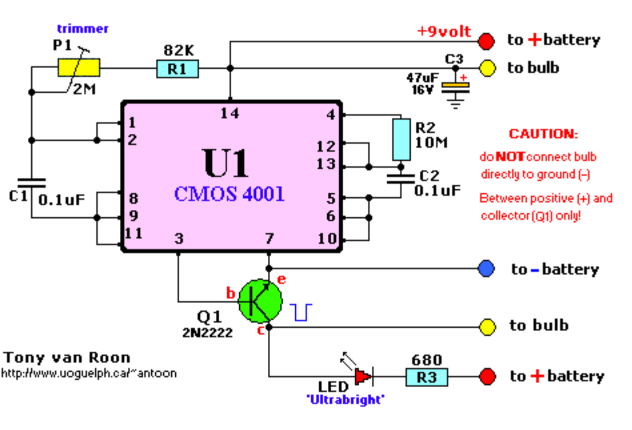

Parts List:

```
All resistors are 1/4 watt, 5%. Unless otherwise posted.

   R1 = 82K
   R2 = 10M
   R3 = 680 Ohm
   P1 = 2 Meg (10-turn trimmer)
C1/C2 = 0.1 µF, Ceramic (100 nanoFarad)
   C3 = 0.01 µF, Ceramic (10nF, not shown in diagram, see note)
  LED = Red, Ultra Bright or substitute with 1N4148 diode or Schottky type
   Q1 = 2N2222(A) (see below for other replacements
   U1 = CD4001B, MC14001B, or equivalent CMOS (quad 2-input NOR)
 BULB = Miniature high brightness light bulb, 5v/15ma (9V) or Ultra-Bright LED's.
        Substitute with 2 volt bulbs (Electro-Sonic #1784) if power source is
        6 volt or less.
```

Other substitutes for Q1 are listed below. **Do NOT use the 2N3904!**
PN100, ECG128/NTE128, GE18, ECG123AP/NTE123AP, PN3646, 2N4401, MPSA14, etc.

Description:

Naturally this circuit is not the same as a strobe circuit and don't flashes as bright as a strobe, but pretty close. I used a reflector out of an old miniature camera I picked up from the surplus store and mounted it inside the tail after re-modeling the reflector a bit to suit the style of the tail.

The above circuit will support 1 or 2 bulbs and look like the real thing....CHEAP! Pulse brightness is adjustable with P1 and Flash rate is steady at 50 flashes per minute or so. An Ultra Bright led is required.
LED's may be used instead of bulbs, but make sure P1 is turned CCW ***BEFORE*** applying power to the circuit or LED's will burn to a crisp. I did some testing with several types of LED's and different colors. Personally I prefer just the bulbs. If you need a red or green light just use some transparent paint on them. Works! Do ***NOT*** connect the lights directly to ground! Which means, don't connect directly to '+' and '-' but only '+' and 'c' of Q1.
Battery power can be from 4.8 to 15 volt, but 9 or 12 volt would be preferred. A standard 9-v alkaline battery should work for a long time. Also, in the parts list, I mentioned that the 2mm red led can be substituted by a 1N4148 'signal' diode. However, the led gives a visible indication of the proper operation of the circuit. Looking at the diagram, the voltage 4.8 - 16volt mentioned shows the flexibility of the cmos IC, the bulbs work better between 9-12volt. (remember to get different bulbs if voltage is less than 6v).
This device was tested for interference with JR, Futaba, HiTec, Airtronics, and ACE radio equipment. None were found. I suggest, however, to keep the device away from receiver and servos
I do not recommend using your receiver pack (4.8v) to power both receiver and this circuit. Use a 9V setup for best results. Click here to see the data sheet on the **MC14001B.**

Note:

Also, you can use a decoupling capacitor close to the IC. Solder a 10nF ceramic type (0.01) between pins 7 and 14.

Testing and Setup

Before hooking up the lights and all the wires and what not, you should pre-test the circuit for proper operation as I know by experience that depending on the led type it (cathode/anode) may have to be reversed. Meaning, if the led does not flash, desolder the led connections and put it the other way (cathode to base of Q1). As mentioned before, an "Ultra-Bright" or "High-Brightness" type of LED is needed. The reason for this is that the current pulse coming from the led triggers the base of Transistor Q1 and the collector of Q1 is feeding your lights which determines the intensity of the flash, with a regular led there is not enough power to bias Q1. My personal preference are the miniature bulbs. Anyways, enjoy!

Trouble Shooting

Hope it does not get to this point but it happens and is possible. Most 'does-not-work' circuit problems come from wiring errors, missing a connection, or damaging/destroying a cmos device while handling and/or soldering it in place.
See if you get a pulse from pin 3. No? Disconnect the battery and desolder the led. Connect the battery again and check for a pulse on pin 3. Yes? You have something connected wrong after pin 3, maybe the led leads need to be reversed. No? You either made a wiring error or damaged the 4001 cmos ic. Check all your wiring carefully. Before replacing the 4001 cmos ic make sure to remove the power and all static from your hands by touching ground for a couple seconds...

Back to Gadgets Menu page

Wingtip Navigation Lights

by Tony van Roon

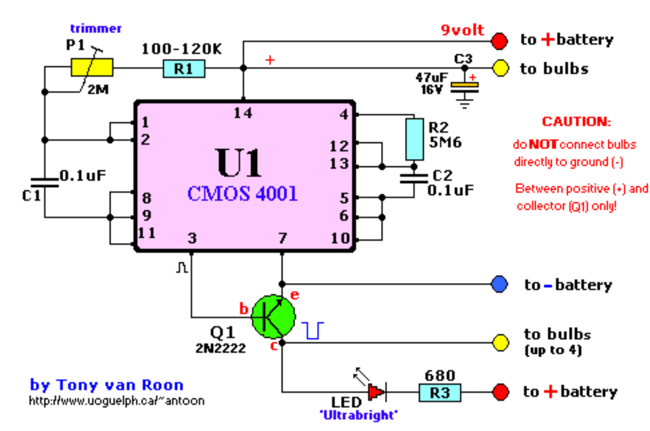

Parts & Description

All resistors are 1/4 watt, 5%. Unless otherwise posted.

```
   R1 = 100K-120K
   R2 = 5M6
   R3 = 680 Ohm
   P1 = 2 Meg, trimmer pot
J1,J2 = Jumper
   C1 = 0.1 uF, Ceramic (100 nanoFarad)
   C2 = 0.1 uF, Ceramic (100 nanoFarad)
  LED = Red, 'Ultra Bright' or substitute with 1N4148 or Schottky type diode
   T1 = PN100, 2N2222(A), or any other equivalent NPN transisor
   U1 = CD4001B, MC14001B, or equivalent CMOS
 BULB = Miniature high brightness light bulb, 5v/15ma or Ultra-Bright LED's.
        Substitute with 2volt bulbs (Electro-Sonic #1784) if power source is
        less than 6 volt.  The larger the current of the bulb (e.i. larger
        than 5v/15mA)  the less bright it will flash!
```

This circuit will support up to 4 bulbs and will really look like the real thing. Pulse brightness is adjustable with P1 and Flashrate is steady at 60 flashes per minute or so.
LED's may be used instead of bulbs, but make sure P1 is turned CCW ***BEFORE*** applying power to the circuit or LED's will burn to a crisp. I did some testing with several types of LED's and different colors. Personally I prefer just the bulbs. If you need a red or green light just use some transparent paint on them. Works! Do ***NOT*** connect the lights directly to ground! Which means, don't connect directly to '+' and '-' but only '+' and 'c' of T1.
Battery power can be from 4.8 to 15 volt, but 9 or 12 volt would be preferred. A standard 9V Alkaline battery should work for a long time. Also, in the parts list, I mentioned that the 2mm red led can be substituted by a 1N4148 'signal' diode. However, the led gives a visible indication of the proper operation of the circuit. Looking at the diagram, the voltage 4.8 - 16volt mentioned shows the flexibility of the cmos IC, the bulbs work better in the 9 to 12V range. (remember to get different bulbs if voltage is less than 6V).
This device was tested for interference with JR, Futaba, HiTec, Airtronics, and ACE radio equipment. None were found. I suggest, however, to keep the device away from receiver and servos.
I do not recommend using your receiver pack (4.8v) to power both receiver and this circuit. Stick with an alkaline 9V setup. To see the datasheet on the **MC14001B,** just click on it.

Testing and Setup

Before hooking up the lights and all the wires and what not, you should pre-test the circuit for proper operation as I know by experience that depending on the led type it (cathode/anode) may have to be reversed. Meaning, if the led does not flash, desolder the led connections and put it the otherway (cathode to base of T1). As mentioned before, an "Ultra-Bright" or "High-Brightness" type of LED is works best. My personal preference are the miniature bulbs. Anyways, enjoy!

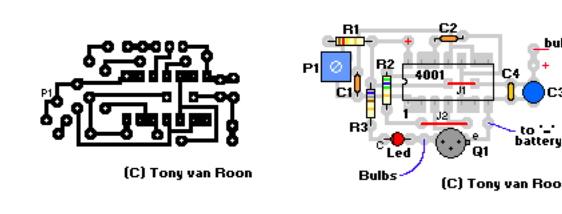

Notes

Also, you can use a decoupling capacitor close to the IC. Solder a 10nF ceramic type (0.01) between pins 7 and 14.

Trouble Shooting

Hope it does not get to this point but it happens and is possible. Most 'does-not-work' circuit problems come from wiring errors, missing a connection, or damaging/destroying a cmos device while handling and/or soldering (too hot too long) it in place.
See if you get a pulse from pin 3. No? Disconnect the battery and desolder the led. Connect the battery again and check for a pulse on pin 3. Yes? You have something connected wrong after pin 3, maybe the led leads need to be reversed. Still No? Disconnect everything from pin 3. If you still don't get a pulse you either made a wiring error or damaged the 4001 cmos ic. Check all your wiring carefully. Before replacing the 4001 cmos ic make sure to remove all static from your hands by touching ground for a couple seconds.
Power up the circuit again with a new IC. Before connecting Q1 back to pin 3 check for a pulse first and then disconnect the battery and solder the base of Q1 back to pin 3.

Below is another way of drawing the diagram, have a look.

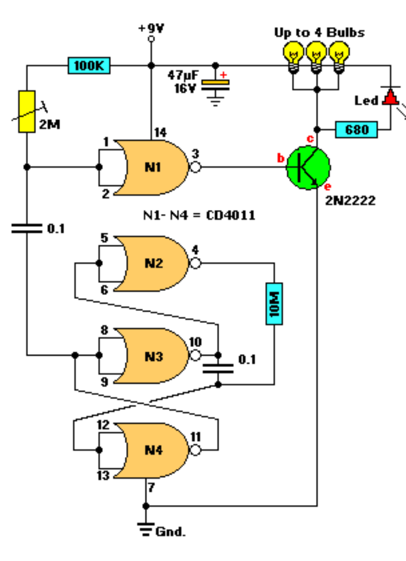

Back to Gadgets Menu page

Chapter 10: Getting the Most from your Batteries

A common difficulty with portable equipment is the gradual decline in battery performance after the first year of service. Although fully charged, the battery eventually regresses to a point where the available energy is less than half of its original capacity, resulting in unexpected downtime.

In many ways, a rechargeable battery exhibits human-like characteristics.

Downtime almost always occurs at critical moments. This is especially true in the public safety sector where portable equipment runs as part of a fleet operation and the battery is charged in a pool setting, often with minimal care and attention. Under normal conditions, the battery will hold enough power to last the day. During heavy activities and longer than expected duties, a marginal battery cannot provide the extra power needed and the equipment fails.

Rechargeable batteries are known to cause more concern, grief and frustration than any other part of a portable device. Given its relatively short life span, the battery is the most expensive and least reliable component of a portable device.

In many ways, a rechargeable battery exhibits human-like characteristics: it needs good nutrition, it prefers moderate room temperature and, in the case of the nickel-based system, requires regular exercise to prevent the phenomenon called 'memory'. Each battery seems to develop a unique personality of its own.

Memory: myth or fact?

For clarity and simplicity, we use the word 'memory' to address capacity loss on nickel-based batteries that are reversible.

The word 'memory' was originally derived from 'cyclic memory', meaning that a NiCd battery can remember how much discharge was required on previous discharges. Improvements in battery technology have virtually eliminated this phenomenon. Tests performed at a Black & Decker lab, for example, showed that the effects of cyclic memory on the modern NiCd were so small that they could only be detected with sensitive instruments. After the same battery was discharged for different lengths of time, the cyclic memory phenomenon could no longer be noticed.

The problem with the nickel-based battery is not the cyclic memory but the effects of crystalline formation. There are other factors involved that cause degeneration of a battery. For clarity and simplicity, we use the word 'memory' to address capacity loss on nickel-based batteries that are reversible.

The active cadmium material of a NiCd battery is present in finely divided crystals. In a good cell, these crystals remain small, obtaining maximum surface area. When the memory phenomenon occurs, the crystals grow and drastically reduce the surface area. The result is a voltage depression, which leads to a loss of capacity. In advanced stages, the sharp edges of the crystals may grow through the separator, causing high self-discharge or an electrical short.

Another form of memory that occurs on some NiCd cells is the formation of an inter-metallic compound of nickel and cadmium, which ties up some of the needed cadmium and creates extra resistance in the cell. Reconditioning by deep discharge helps to break up this compound and reverses the capacity loss.

The memory phenomenon can be explained in layman's terms as expressed by Duracell: "The voltage drop occurs because only a portion of the active materials in the cells is discharged and recharged during shallow or partial discharging. The active materials that have not been cycled change in physical characteristics and increase in resistance. Subsequent full discharge/charge cycling will restore the active materials to their original state."

When NiMH was first introduced there was much publicity about its memory-free status. Today, it is known that this chemistry also suffers from memory but to a lesser extent than the NiCd. The positive nickel plate, a metal that is shared by both chemistries, is responsible for the crystalline formation.

New NiCd cell.
The anode is in fresh condition (capacity of 8.1Ah). Hexagonal cadmium hydroxide crystals are about 1 micron in cross section, exposing large surface area to the liquid electrolyte for maximum performance.

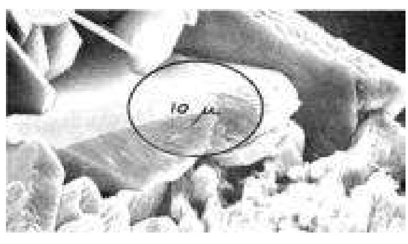

Cell with crystalline formation.
Crystals have grown to an enormous 50 to 100 microns in cross section, concealing large portions of the active material from the electrolyte (capacity of 6.5Ah). Jagged edges and sharp corners may pierce the separator, which can lead to increased self-discharge or electrical short.

Restored cell.
After pulsed charge, the crystals are reduced to 3 to 5 microns, an almost 100% restoration (capacity of 8.0A). Exercise or recondition are needed if the pulse charge alone is not effective.

Figure 10-1: Crystalline formation on NiCd cell.
Illustration courtesy of the US Army Electronics Command in Fort Monmouth, NJ, USA.

In addition to the crystal-forming activity on the positive plate, the NiCd also develops crystals on the negative cadmium plate. Because both plates are affected by crystalline formation, the NiCd requires more frequent discharge cycles than the NiMH. This is a non-scientific explanation of why the NiCd is more prone to memory than the NiMH.

The stages of crystalline formation of a NiCd battery are illustrated in Figure 10-1. The enlargements show the negative cadmium plate in normal crystal structure of a new cell, crystalline formation after use (or abuse) and restoration.

Lithium and lead-based batteries are not affected by memory, but these chemistries have their own peculiarities. Current inhibiting pacifier layers affect both batteries — plate oxidation on the lithium and sulfation and corrosion on the lead acid systems. These degenerative effects are non-correctible on the lithium-based system and only partially reversible on the lead acid.

LM301A Op-Amp

Data sheet

Direct substitute(s): NTE975 (DIP), NTE1171 (Metal Can)

by Tony van Roon

Description:
The LM301A is a high performance operational amplifier featuring high gain, short circuit protection, simplified compensation and excellent temperature stability.

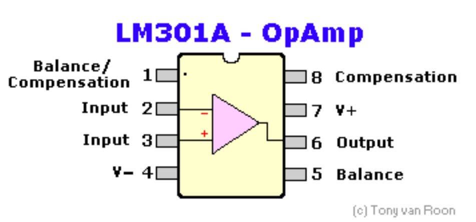

Unique Features:
o 8-pin DIL Integrated Circuit.
o Short circuit protection.
o Offset voltage null capability.
o Large common-mode and differential voltage ranges.
o Low power consumption.
o No latch up.
o LM101, LM101A, LH2101, LH2101A Mil-std 883A, B, C available.
o LM101A, LH2101A Mil-std-38510 available.

Absolute Maximum Ratings

Parameter	Rating	Unit
V+ Supply Voltage	18	Vdc
Differential input voltage	30	Vdc
Input voltage (1)	15	Vdc
Power Dissipation	500	mW
Output short-circuit duration	indefinite	
Operating temperature range	0 to +70	°C
Storage temperature range	-65 to +150	°C
Lead temperature (soldering, 10sec)	300	°C

Note (1): **For supply voltages less then 15V, the absolute maximum input voltage is equal to the supply voltage.**

Back to Gadgets Menu page

LM334 - Adjustable Current Source

Data sheet

Direct substitute(s): LM134/LM234

by Tony van Roon, CET

Description:
The LM334 is 3-terminal adjustable current source featuring 10,000:1 range in operating current, excellent current regulation and a wide dynamic voltage range of 1V to 40V. Current is established with one external resistor and no other parts are required. Initial current accuracy is approximately 3%. The LM334 (same for LM134/LM234) are true floating current sources with no separate power supply connections.
In addition, reverse applied voltages up to 20V will draw only a few dozen microamps of current, allowing the devices to act as both rectifier and current source in AC applications. The LM334 was designed to operate at current levels from 1µA to 10mA, as set by the external resistor. Since it operates as a true two-terminal current source, no extra power, as mentioned before, and no input signals are required. Regulation is typically 0.02%/V and terminal-to-terminal voltage can range from 800mV to 30V. Because the operating current is directly proportional to absolute temperature in degrees Kelvin, this device will also find wide applications as a temperature sensor. The temperature dependence of the operating current is +0.336%/°C at room temperature. For example, a device operating at 298µA will have a temperature coefficient of +1µA/°C.
The temperature depence is extremely accurate and repeatable. If a zero temperature coefficient current source is required, this is easily achieved by adding a diode and a resistor.

The LM334 is guaranteed over a temperature range of 0°C to +70°C. This device is available in TO-46 hermetic, TO-92 (most common), and SO-8 plastic packages.

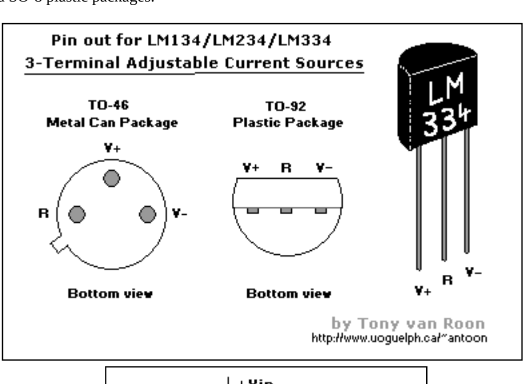

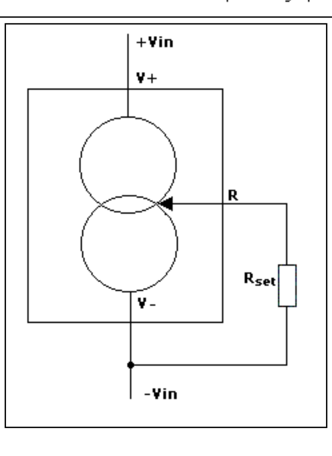

Unique Features:
o Operates from 1V to 40V.
o 0.02%/V current regulation.
o Programmable from 1µA to 10µA.
o True 2-terminal operation.
o Available as fully specified temperature sensor.
o Approximately 3% initial accuracy.

Features:
o Fully 3-Terminal Adjustable Current Source.
o 3-pin or SO-8 surface mount package.
o V^+ to V^- Reverse voltage 20V.
o R Pin to V^- Voltage 5V.
o Set current 10mA.
o Power dissipation 400mW.
o Soldering heat @ 260°C for 10 seconds maximum

Back to Gadgets Menu page

LM3914 Dot/Bar Display Driver

Data sheet

Direct substitute(s): NTE1508, ECG1508

by Tony van Roon

Pin #	Pin Function
1	Led 1 (on/off)
2	V- (Ground)
3	V+ (Vdc)
4	Divider Low
5	Signal Input
6	Divider High
7	Reference Output
8	Reference Adjust
9	Mode (Dot/Bar)
10	Led 10
11	Led 9
12	Led 8
13	Led 7
14	Led 6
15	Led 5
16	Led 4
17	Led 3
18	Led 2

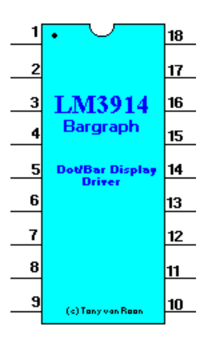

Look at all these features:
o 18 pin Dual-In-Line (DIL) Integrated Circuit.
o Drives LEDs, LCDs or vacuum fluorescents
o Bar or Dot display mode externally selectable by user.
o Expandable to displays of 100 steps.
o Internal voltage reference from 1.2 to 12V.
o Operates on single supply of less than 3V.
o Supports 10 Led's, directly driven, all colors.
o 10-step DOT/BAR driver for linear scale.
o Only a couple of external components required.
o Works with voltages between 3 and 25Vcc.
o Inputs operate down to ground.
o Output current programmable from 2 mA to 30 mA.
o No multiplex switching or interaction between outputs.
o Input withstands approximately 35V without damage or false outputs.
o LED driver outputs are currents regulated, open collectors.
o Outputs can interface with TTL or CMOS logic.
o The internal 10-step divider is floating and can be referenced to a wide range of voltages.

The LM3914 is a monolithic integrated circuit that senses analog voltage levels and drives 10 Leds, providing a linear anolog display. A single pin (9) changes the display from a moving dot to a bar graph. Current drive to the LEDs is regulated and programmable, eliminating the need for resistors. This feature is one that allows operation of the whole system from less than 3V.

The system contains its own adjustable reference and accuracte 10-step voltage divider. The low-bias-current input buffer accepts signals down to ground, or V-, yet needs no protection against inputs of 35V above or below ground. The buffer drives 10 individual comparators referenced to the precision divider. Indication non-linearity can thus be held typically to 1/2%, even over a wide temperature range.

Versatility was designed into the LM3914 so that controller, visual alarm, and expanded scale funtions are easily added on to the display system. The circuit can drive LEDs of many colors, or low-current incandescent lamps. Many LM3914's can be "chained" to form displays of 20 to over 100 segments. Both ends of the voltage divider are externally available so that 2 drivers can be made into a zero-center meter.

The LM3914 is very easy to apply as an analog meter circuit. A 1.2V full-scale meter requires only 1 resistor and a single 3V to 15V supply in addition to the 10 display LEDs. If the 1 resistor is a pot, it becomes the LED brightness control.

When in "DOT" mode, there is a small amount of overlap or "fade" (about 1mV) between segments. This assures that at no time will all LEDs be "OFF", and thus any ambiguous display is avoided. Various novel displays are possible.
Much of the display flexibility derives from the fact that all outputs are individual, DC regulated currents. Various effects can be achieved by modulating these currents. The individual outputs can drive a transistor as well as a LED at the same time, so controller functions including "staging" control can be performed. The LM3914 can also act as a programmer, or sequencer.

The LM3914 is rated for operation from 0°C to +70°C. The LM3914N is available in an 18-lead molded (N) package.

With pin 9 not connected (floating), it is functioning in 'DOT' mode. Meaning, it will light up one led at a time. If you wish to use the 'BAR' mode, then connect pin 9 to the positive supply rail, but obviously with increased current consumption.
This chip is pretty versatile and can handle a lot of abuse, just don't exceed the manuafacturer's voltage maximum.
If the leads of the LEDs are longer than 6 inches, a 10µF electrolytic capacitor is needed over the Anodes of the LEDs and pin 2. A 2.2µF Tantalum capacitor can be used instead of the electrolytic.

Back to Gadgets Menu page

MC1455 (CMOS)Timer/Oscillator

Data sheet

Direct Replacement for LM555, NE555

by Tony van Roon

The MC1455 silicon monolithic timing circuit is a highly stable controller capable of producing accurate time delays, or oscillation. In the time delay mode of operation, the time is precisely controlled by one external resistor and capacitor. For a stable operation as an oscillator, the free running frequency and the duty cycle are both accurately controlled with two external resistors and one capacitor. The circuit may be triggered and reset on falling waveforms, and the output structure can source or sink up to 200 mA or drive MTTL circuits.

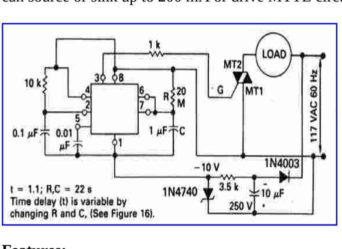

22-Second solid-state time delay relay circuit (click to enlarge)

Features:
- Turn off time less than 2μSeconds.
- Maximum operating frequency greater than 500KHz.
- Timing from microseconds to hours.
- Operates in both astable and monostable modes.
- High output current.
- Adjustable duty-cycle.
- TTL compatible.
- Temperature stability of 0.005% per °C.
- Rise and Fall times of output is 100nS typical.
- Normally "on" or normally "off".
- Output can also drive MTTL circuits.
- Direct pin-compatible with the LM555 & NE555 timers.

Some Applications: 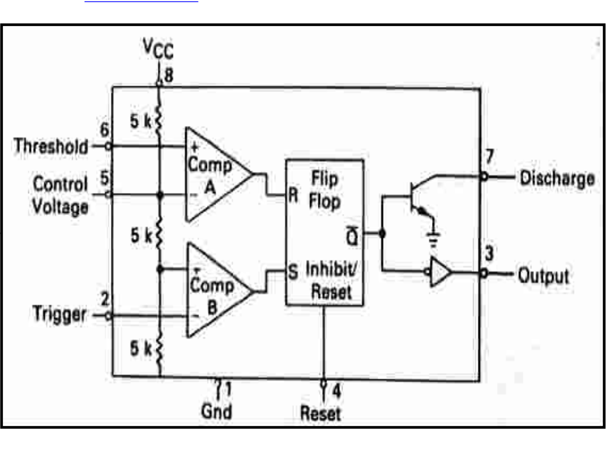

Block Diagram

- Precision Timing.
- Pulse generation.
- Sequential timing.
- Timedelay generation.
- Pulse width modulation.
- Pulse position modulation.
- Missing Pulse Detector.

Absolute Maximum Ratings:
- Supply voltage for MC1455 is +18 volt.
- Discharge current (pin 7) is 200mA.
- Power dissipation 680 milliWatts.
- Operating temperature range for MC1455G, MC1455P1, NE555V, MC1455D,
and MC1455U are 0 °C to +70°C. For MC1455BP1 is that -40 °C to +85 °C
- Storage temperature range from -65 to -150 °C.
- Lead temperature (soldering, up to 60 sec) 300 °C.

Suffix's:
- The 'G' suffix (e.i. MC1455G) stands for Metal package (can), case 601-04.
- The 'P1' suffix stands for Plastic package (the most common), case 626-05.
- The 'U' suffix stands for Ceramic package (mostly used in the Industry), case 693-02.
- The 'L' suffix stands for Ceramic package (mostly used in the Industry), case 632-08.
- The 'D' suffix stands for Surface Mount, Plastic package, case 751-02 or SO-8.
- The 'D, N, or FE' suffix can be found for the 8-pin dip packages.
- The 'F' suffix is the 14 pin version of the 8-pin dip. Pins 2,5,7,9,11, and 13 are not connected.

Notes:
- Supply current when output high typically 1mA or less.
- Tested at Vcc=5V and Vcc=15V.
- This will determine the maximum value of Ra+Rb, for 15V operation, the max total
R = 10 megohm, and for 5V operation, the max total of R = 3.4 megohm.
- Specified with trigger input high.
- Time measured from a positive going input pulse from 0 to 0.8 x Vcc into the threshold
to the drop from high to low of the output. Trigger is tied to treshold.

Back to Gadgets Menu page

MC14001B Quad 2-input NOR

Data sheet

Direct Replacement for CD4001(B)

by Tony van Roon

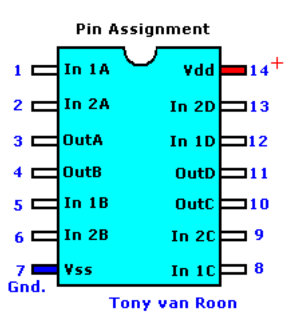

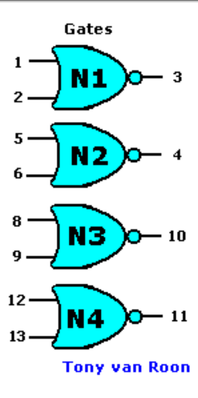

The MC14001B, B Series logic gates are constructed with P and N channel enhancment mode devices in a single monolithic structure (Low Power Complementary MOS, CMOS SSI). Their primary use is where low power dissipation and/or high noise immunity is desired.
This device contains protection circuitry to guard against damage due to high static voltage or electric fields. However, precautions must be taken to avoid applications of any voltage higher than the maximum rated voltages to this high-impedance circuit. For proper operation, Vin and Vout should be constrained to the range Vss [much-smaller-than] (Vin or Vout) [much-smaller-than] Vdd. Unused inputs ***must*** always be tied to an appropriate logic voltage level (e.g. either Vss or Vdd). Unused outputs ***must*** be left open.

Notes:

- DC Supply Voltage range (Vdd) 3 to 18Vdc.
- All outputs buffered.
- Double diode protection on All inputs.
- Capable of driving two Low-power TTL loads or one Low-power Shottky TTL load over the rated temperature range.
- Pin-for-Pin Replacements for corresponding CD4000 Series B suffix devices.
- Storage Temperature range from -65 °C to +150 °C.
- Power dissipation 500mWatt.
- Lead temperature 260 °C (Meaning 8 seconds per leg for soldering).
- Maximum rating (Vdd) 0.5v to 18v. (Voltages referenced to Vss)
- Input or Output Voltage (DC or Transient) 0.5 to Vdd +0.5.
- Input or Output Current (DC or Transient), per Pin: Plus or Minus 10mA.

Back to Gadgets Menu page

MC14013B Dual Type D Flip-FLop

Data sheet

Direct substitute for CD4013B

by Tony van Roon

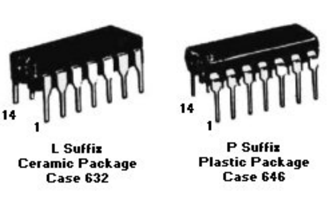

The MC14013B dual type D flip-flop is constructed with MOS P-Channel enhancement mode devides in a single monolithic structure. Each flip-flop has independent Data, (D), Direct Set, (S), Direct Reset, (R), and Clock, (C), inputs and complementary outputs (Q and Q-not). These devices may be used as shift-register elements or as type 'T' flip-flops for counter and toggle applications. The MC14013B CMOS SSI is a low-power complimentary MOS.

This device contains protection circuitry to guard against damage due to high static voltage or electric fields. However, precautions must be taken to avoid applications of any voltage higher than the maximum rated voltages to this high-impedance circuit. For proper operation, Vin and Vout should be constrained to the range Vss [much-smaller-than] (Vin or Vout) [much-smaller-than] Gnd. Unused inputs ***must*** always be tied to an appropriate logic voltage level (e.g. either Vcc or Gnd). Unused outputs ***must*** be left open.

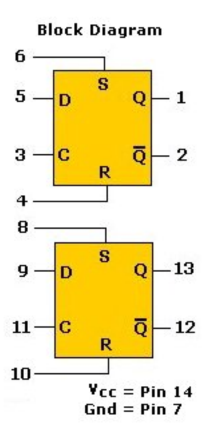

Truth Table

Inputs				Outputs	
clock↑	data	reset	set	Q	Q̄
_/‾ (rising)	0	0	0	0	1
_/‾ (rising)	1	0	0	1	0
‾_ (falling)	X	0	0	Q	Q̄	no change
X	X	1	0	0	1
X	X	0	1	1	0
X	X	1	1	1	1

X = Don't Care
↑ = Level Change

Notes:

- DC Supply Voltage range (Vcc) 3 to 18 volt.
- Static operation.
- Diode protection on All inputs.
- Logic Edge-Clocked flip-flop design -- Logic state is retained indefinately with clock level either high or low; information is transferred to the output only on the positive going edge of the clock pulse.
- Capable of driving two Low-power TTL loads or one Low-power Shottky TTL load over the rated temperature range.
- Pin-for-Pin Replacement for the CD4013B.
- Storage Temperature range from -65 °C to +150 °C.
- Power dissipation 500mWatt.
- Lead temperature 260 °C (Maximum 8 seconds per leg for soldering).
- Maximum rating (Vcc) 0.5v to 18v. (Voltages referenced to Gnd)
- Input or Output Voltage (DC or Transient) 0.5 to Vdd +0.5.
- Input or Output Current (DC or Transient), per Pin; Plus or Minus 10mA.

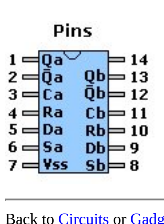

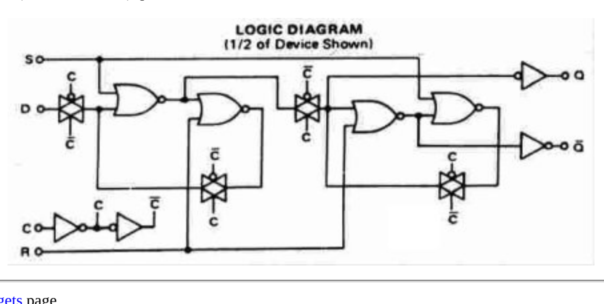

Back to Circuits or Gadgets page

MC3456/MC3556 (CMOS) Dual Timer/Oscillator Data sheet

Direct Replacement for NE556, LM556

by Tony van Roon

The MC3456/3556 silicon monolithic timing circuit are a highly stable controller capable of producing accurate time delays, or oscillation. In the time delay mode of operation, the time is precisely controlled by one external resistor and capacitor. For a stable operation as an oscillator, the free running frequency and the duty cycle are both accurately controlled with two external resistors and one capacitor. The circuit may be triggered and reset on falling waveforms, and the output structure can source or sink up to 200 mA or drive MTTL circuits.

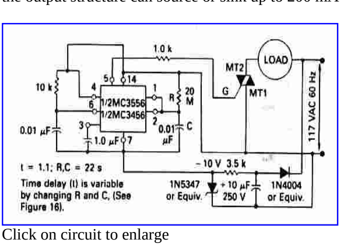

22-Sec. solid-state time delay relay circuit

Click on circuit to enlarge

Features:
- Turn off time less than 2 micro seconds.
- Maximum operating frequency greater than 500KHz.
- Timing from microseconds to hours.
- Operates in both astable and monostable modes.
- High output current.
- Adjustable duty-cycle.
- TTL compatible.
- Temperature stability of 0.005% per °C.
- Rise and Fall times of output is 100nS typical.
- Normally "on" or normally "off".
- Output can also drive MTTL circuits.
- Direct pin-compatible with the NE556/SE556/LM556 timers.
- Dual version of the popular MC1455 timer.

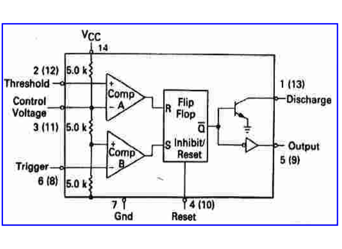

Some Applications:
- Precision Timing.
- Pulse generation.
- Sequential timing.
- Timedelay generation.
- Pulse width modulation.
- Pulse position modulation.
- Missing Pulse Detector.

Absolute Maximum Ratings:
- Supply voltage for MC3456/MC3556 is +18 volt.
- Discharge current (pin 7) is 200mA.
- Power dissipation 680 milliWatts.
- Operating temperature range for MC3456/MC3556 is 0 °C to +70 °C.
- Storage temperature range from -65 to -150 °C.
- Lead temperature (soldering, up to 60 sec) 300 °C.

Suffix's:
- The 'L' suffix stands for Ceramic package (mostly used in the Industry), case 632-08.
- The 'D' suffix stands for Surface Mount, Plastic package, case 751-02 or SO-8.
- The 'P' suffix stands for Plastic package, case 646-06.

Notes:
- Supply current when output high typically 1mA or less.
- Tested at Vcc=5V and Vcc=15V.
- This will determine the maximum value of Ra+Rb, for 15V operation, the max total
R = 10 Mega-ohm, and for 5V operation, the max total of R = 3.4 Mega-ohm.
- Specified with trigger input high.
- Time measured from a positive going input pulse from 0 to 0.8 x Vcc into the threshold
to the drop from high to low of the output. Trigger is tied to threshold.

Back to Circuits or Gadgets page

MC14093 (CMOS) Quad 2-Input NAND Schmitt Trigger Data sheet

Direct Replacement for CD4093, MC14011B

by Tony van Roon

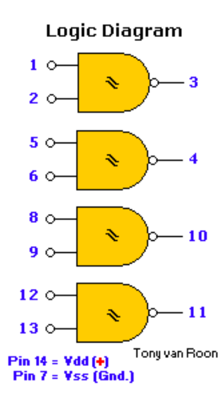

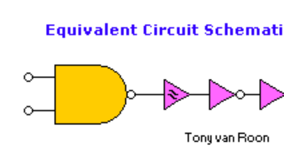

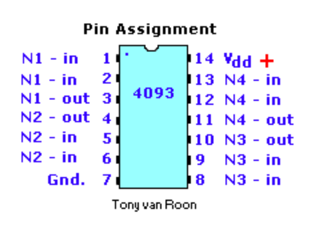

The MC14093B Schmitt Trigger is constructed with MOS P-channel and N-channel enhancement mode devices in a single monolithic structure. These devices find primary use where low power dissipation and/or high noise immunity is desired. The MC14093B may be used in place of the MC14011B quad 2-input NAND gate for enhanced noise immunity or to "square-up" slowly changing waveforms.

Features:
- Supply voltage range is 3.0Vdc to 18Vdc.
- Capable of driving two low-power TTL loads or one low-power Schottky TTL load over the rated temperature range.
- Double diode protection on ALL inputs.
- Pin-for-pin compatible with the CD4093.
- Can be used to replace the MC14011B.

Absolute Maximum Ratings:
- Supply voltage for MC14093B is -0.5 to +18 volt dc.
- Input or Output voltage (DC or Transient) -0.5 to Vdd +0.5volt dc.
- Input or Output current (DC or Transient), per pin is approx. 10mA.
- Power dissipation 500 milliWatts.
- Storage temperature range from -65 to +150 °C.
- Lead temperature (soldering, up to 8 sec) 260 °C.

Suffix's:
- The 'L' suffix stands for Ceramic package (mostly used in the Industry), case 632.
- The 'P' suffix stands for Plastic package, case 646.

Notes:
- Tie unused inputs always to an appropriate voltage level like +Vcc or Ground. Unused outputs must remain open.
- The MC14093B contains protection circuitry to guard against damage due to high static voltages or electric field. However, precautions must be take to avoid applications of any voltage higher than maximum rated voltage to this high impedance circuit. For proper operation, Vin and Vout should be constrained to the range Vss smaller-than Vdd.

Back to Gadgets Menu page

NE555 Timer/Oscillator

Data sheet

Similar to: LM555-SE555C-MC1455P1-NTE955M-ECG955M

by Tony van Roon

The NE555 silicon monolithic timing circuit is a highly stable controller capable of producing accurate time delays, or oscillation. In the time delay mode of operation, the time is precisely controlled by one external resistor and capacitor. For a stable operation as an oscillator, the free running frequency and the duty cycle are both accurately controlled with two external resistors and one capacitor. The circuit may be triggered and reset on falling waveforms, and the output structure can source or sink up to 200 mA.

Features:

- Turn off time less than 2 micro seconds.
- Maximum operating frequency greater than 500KHz.
- Timing from microseconds to hours.
- Operates in both astable and monostable modes.
- High output current.
- Adjustable duty-cycle.
- TTL compatible.
- Temperature stability of 0.005% per °C.
- Rise and Fall times of output is 100nS typical.
- The MC1455 (cmos) has a normally "on" or normally "off".
- The MC1455 (cmos) output can also drive MTTL circuits.
- The MC1455 (cmos) is direct pin-compatible with the NE555 timers.

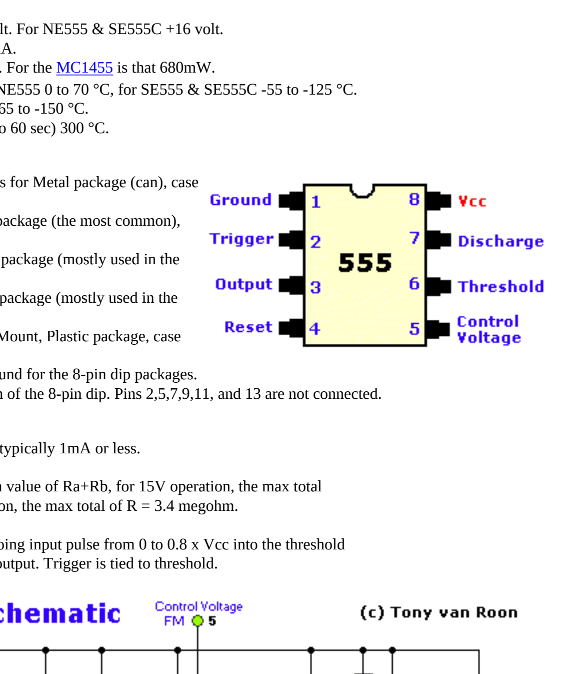

Fig. 3

Some Applications:

- Precision Timing.
- Pulse generation.
- Sequential timing.
- Time delay generation.
- Pulse width modulation.
- Pulse position modulation.
- Missing Pulse Detector (used in *Crashed Aircraft Locator* article).

Absolute Maximum Ratings:

- Supply voltage for SE555 +18 volt. For NE555 & SE555C +16 volt.
- Discharge current (pin 7) is 200mA.
- Power dissipation 600 milliWatts. For the MC1455 is that 680mW.
- Operating temperature range for NE555 0 to 70 °C, for SE555 & SE555C -55 to -125 °C.
- Storage temperature range from -65 to -150 °C.
- Lead temperature (soldering, up to 60 sec) 300 °C.

Suffix's:

- The 'G' suffix (e.i. xx555G) stands for Metal package (can), case 601-04.
- The 'P1' suffix stands for Plastic package (the most common), case 626-05.
- The 'U' suffix stands for Ceramic package (mostly used in the Industry), case 693-02.
- The 'L' suffix stands for Ceramic package (mostly used in the Industry), case 632-08.
- The 'D' suffix stands for Surface Mount, Plastic package, case 751-02 or SO-8.
- The 'D, N, or FE' suffix can be found for the 8-pin dip packages.
- The 'F' suffix is the 14 pin version of the 8-pin dip. Pins 2,5,7,9,11, and 13 are not connected.

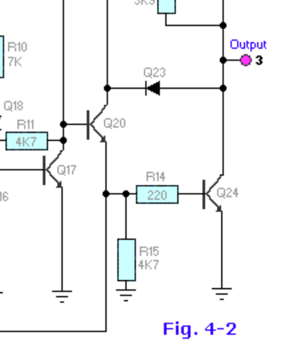

Notes:

- Supply current when output high typically 1mA or less.
- Tested at Vcc=5V and Vcc=15V.
- This will determine the maximum value of Ra+Rb, for 15V operation, the max total R = 10 megohm, and for 5V operation, the max total of R = 3.4 megohm.
- Specified with trigger input high.
- Time measured from a positive going input pulse from 0 to 0.8 x Vcc into the threshold to the drop from high to low of the output. Trigger is tied to threshold.

Fig. 4-2

Back to Gadgets Menu page

NE556 Dual Timer/Oscillator

Data sheet

Similar to: LM556-SE556C-MC3453-MC3556-NTE978-ECG978

by Tony van Roon

The 556 Dual Monolithic timing circuit is a highly stable controller capable of producing accurate time delays, or oscillation. The 556 is simply a dual 555. Timing is provided by an external resistor and capacitor for each timing function. The two timers operate independently of each other sharing only Vcc and Ground. The circuit may be triggered and reset on falling waveforms, and the output structure may source or sink up to 200 mA.

Features:

- The NE556/SE556 timers can be directly replaced by the CMOS types MC3456/MC3556.
- Timing from microseconds to hours.
- Supply voltage from +4.5V (min) to +18V (max).
- Replaces two 555 timers.
- Maximum operating frequency greater than 500Khz.
- Operates in both astable and monostable modes.
- High output current.
- Adjustable duty-cycle.
- TTL compatible.
- Temperature stability of 0.005% per °C.
- Rise and Fall times of output is 100nS typical.
- SE556 type MIL STD 883A, B, C is available.

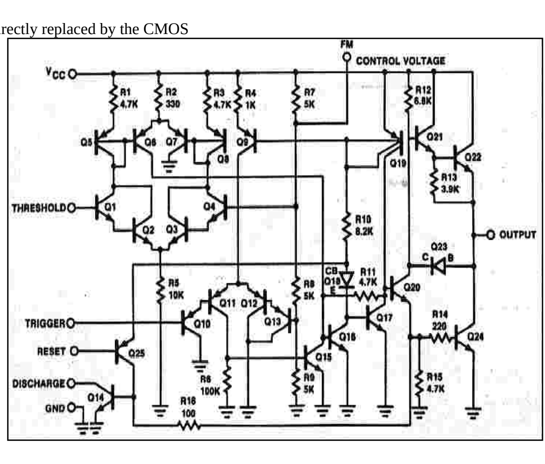

Some Applications:

- Precision Timing.
- Pulse shaping.
- Pulse generation.
- Sequential timing.
- Time delay generation.
- Pulse width modulation.
- Pulse position modulation.
- Missing Pulse Detector.
- Tone burst generator.
- Appliance timing.
- Traffic light control.
- Touch tone decoder.

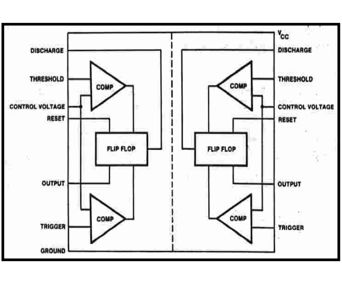

Absolute Maximum Ratings:

- Supply voltage for SE556 +18 volt. For NE556 & SE556C +16 volt.
- Discharge current (pin 7) is 200mA.
- Power dissipation 600 milliWatts.
- Operating temperature range for NE556 0 to 70 °C, for SE556 & SE556C -55 to -125 °C.
- Storage temperature range from -65 to -150 °C.
- Lead temperature (soldering, up to 60 sec) +300 °C.

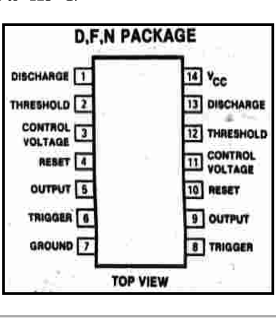

Notes:

- Supply current when output high typically 1mA or less.
- Tested at Vcc=5V and Vcc=15V.
- This will determine the maximum value of Ra+Rb, for 15V operation, the max total
R = 10 megohm, and for 5V operation, the max total of R = 3.4 megohm.
- Specified with trigger input high.
- Time measured from a positive going input pulse from 0 to 0.8 x Vcc into the threshold
to the drop from high to low of the output. Trigger is tied to threshold.
- Available in D, F, N, plastic packages. 'D' suffix being the SO-8 surface mount type.

Back to Gadgets Menu page

www.webx.dk Start page
MY little Radio Control page

Foreword
I have been interested in RC planes for many many years, since my father owns a lot of nice RC planes.
so I had seen how much fun he had making them and flying them. But I was more into RC-cars with electric motors.
But in may 2003 I got infected with the RC-Plane disease ! it's like a virus spreading really fast !
also thanks to Claus for infecting me, hehe.. Please visit my local club EFK87.DK

Homemade RC stuff, and RC electronics

Electric flight specific:
Propellar Saver Invented by Claus Urbach !
Light Weight Depron Wing how I made it easy
ECS2B 40A DC motor speed regulator BEC, KIT for sale or assembled NEW
Speed 540 motor mesurements See exactly what kind of current peaks such a motor draws !
Hot to cold motor speed regulator modification how to solve BEC problems with hi voltage.
Speed 400 motor mesurements See exactly what a gearbox does to your plane
Low Voltage Alarm Indicator Good for LiPoly NEW
Depron plane for kids, easy, fast, cheap and good flying even kids can make it
Homemade Quartro-Copter, four bladed helicopter still working on this NEW
Wheels for RC planes See the size and weight, good info if you like to save weight

Glowplug motor flight specific:
Electric starter A cheap way to start your glow engine
Old Glow Engines funny old stuff I have on stuck, most of them I have tested works fine.
On board glowplug driver to make idle more smooth or easy start at the field NEW
Glowplug driver Voltage compensated PWM LM555 and FET NEW
Powerpanel With glowplug driver, RX charge, TX charge, pump switch, starter plug NEW
Fieldbox My fieldbox NEW

Transmitter/Reciever stuff in general:
Transmitter battery modification soldering on NiMH cells will prevent loose connections
FMS Simulator PIC serial interface
UHF data link Realtime serial data downlink.
Trainer for EVO transmitter Old transmitter modified easy for trainer.
Wireless Trainer for Multiplex EVO transmitter old 40MHz TX for 35MHz teacher system.
Video transmitter amplifier Wireless 1GHz video, adds fun to the RC hobby.
Multiplex Cockpit trainer and student how to modify this cheap transmitter for trainer mode.

Charger/Battery stuff in general:
Battery Discharge Automatic Switch Cheap and simple discharger for large cells after flying NEW
Computer battery charger with Z80 and large 2x40 LCD
KAN 1050 NiMh battery pack to save money or to make special designs.
KAN 1050 NiMh battery capacity measurements see some curves.. a 1050 is not 1050mAh at all..
AAA NiMh battery pack to save money or to make special designs.
ISL6-330 Modifications Serial port, sound ON/OFF, Dual boot, Name in display

miscellaneous:
Planeholder See how an easy cheap plane and wing holder can be made
Battery finder for EL planes.
Plane finder, turn off TX then plane will give audio alarm. More info about this later.
My trip to Hamburg modelbauwelt 2003
My trip to Hamburg modelbauwelt 2004
My trip to Crete, Chania AirModelling Club 2004 NEW
DANSK RC POLL Sjov afstemning om modelflyvning hobby, kik ind og stem
My Plane Crash page..ohh no.. dont look here..

My own RC planes

My 1st. Plane (Deceased and buried)

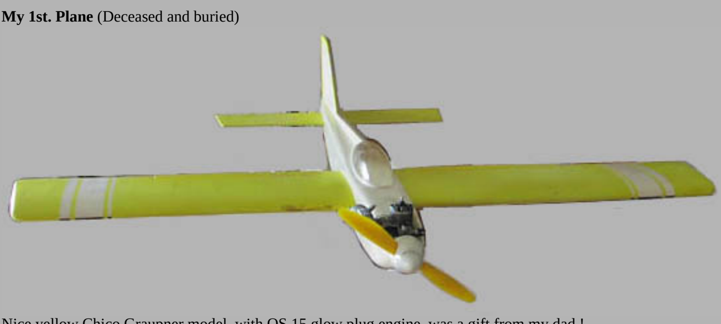

Nice yellow Chico Graupner model, with OS 15 glow plug engine, was a gift from my dad !
This model was HOT in 1977 but this one still works in 2004 !!
Wing span = 99cm, weight = 1230 grames RTF but no fuel in tank.
The original OS 0.15 Engine did work in 2003, but after a crash, I have changed the motor to a Magnum 0.25
This new motor is 75 gram more weight, but then I changed the Gas servo from 50 to 10 gr, and the reciever from 40 to 10 gr,
I also changed the battery pack of 4 x AA 105 gr to 4 x AAA 50 gr. Total weight is now 1170 gr and double engine power.
The bottom side of the plane has black stribes both on the body and wing.
plane with wife - engine closeup - Empty servo room - servo room first two - all 3 mounted
RX and all servo - more servo closeup
battery and fuel tank - power sw charge plug
At the field Pictures: My is on the sticks - Trying to start motor - motor started
Videos: Take off 1 671kb 3 sec. - Take off 2 1Mb 6 sec. - Take off 3 and some fun 1.6MB 29 sec. - Having hi speed fun 18MB 3minutes.
Landing 1Mb 15 sec . - Fly Hi like hell 350kb 8 sec.
Graupner Catalog Chico from 1977: page 1 - page 2 - page 3

My 2nd. Plane

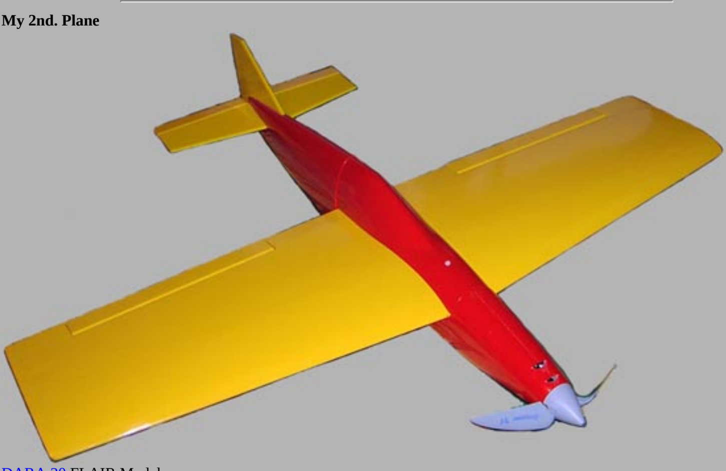

DARA 20 FLAIR Model.
See all the pictures from the complete plane construction
Electric conversion of old glow-motor plane. Wing span = 92cm, Corde = 24cm, Length = 77cm
Total weight with two 8 cells KAN1050 battery packs = 1130 grams.

My 3rd. Plane

Electric light weight 315 grames ready to fly. Wing span = 95 cm.
it is a Park Pilot using a small electric motor.
The powersupply is 6 AAA NIMH cells (80gr) this also powers the reciever and two servos,
the motor is controlled using a small electronic speed controller.
To protect the propeller this plane has a simple landing wheel,
Flying control is done only at the tale rudder and elevator.
The transmitter is a 3ch 40MHz AM type, the motor speed controller is mounted the the rear side.
This TX has both invert and mix facility.
More pictures: Plane with my son - Without wing - In air with Peter as pilot - In air - Flying video clip

---

My 4rd. Plane (Deceased and buried)

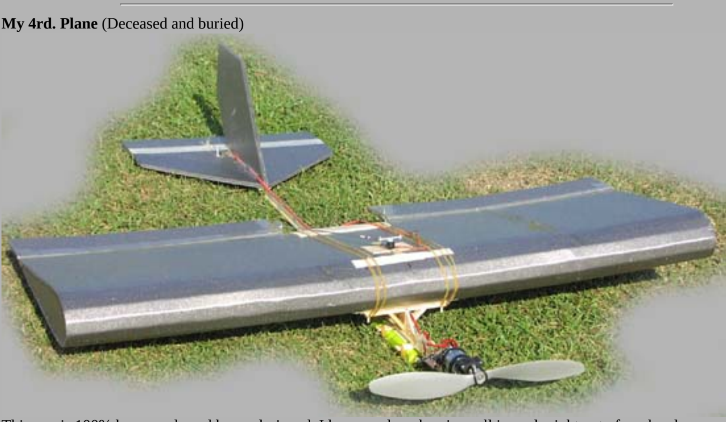

This one is 100% homemade and home designed, I have used no drawings all is made right out of my head.
It can make super fast rolls, normal slow loops, upside down, and hover.
Flying weight 505 grames, Wing span = 80cm. Battery 8 x KAN1050,
Motor Speed 400 with gearbox, prop is 10 x 4.7 inch, pull = 510 grames freshly charged, flying time 5-9 minutes depending on speed.
This plane uses the first Homemade motor regulator I made, and a super small REX5 reciever and super small Dymond servos.
The servos are almost as thin as the double layer Depron plates I used for the tale part, so the height rudder servo was mounted inside the depron.
I had to make the servo cable longer, it looks fine when using heatshrinking tube to isolate the soldering,
the connector end was easy to change cable in using a small screwdriver.
The Heightrudder was cut like this so it can move up and down better. most Depron pieces was first clued and then cut into right size.
Wing is mounted on fuselage like this and hold fast using rubber bands, just like the battery pack.
More pictures: Bottom view - Without wing - Whole length - Landing gear pianowires
More Videos: depronvideo-takeoff.mov 3MB 9Sec - depronvideo-flying.mov 20MB 61Sec - zoomed-flying.avi 2MB 16Sec

---

My 5th. Plane

This blue high wing model "The Stick" by "Bingo" was a gift from my father, it uses a Saito FA50 4 stroke glowplug engine.
I have fitted 3 servos into the fuselage
The landing gear is improved using a glassfiber plate so it will not brake.
The wing on the picture is not the original, but a homemade one, see How I did construct a new wing for my Stick using no drawings
the cord is 31.5cm, made to fit the fuselage and spanwidth 157cm.
The total flying weight was 2350 grams with the original wing..

My 6th. Plane is a combat wing

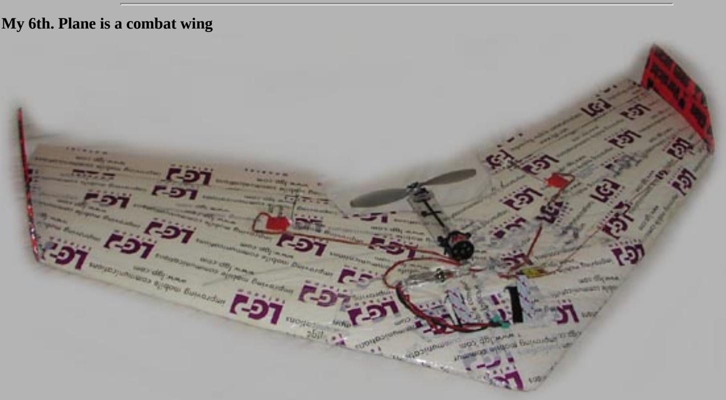

Note the nice covering tape ! it was a nice sponsor gift from my work.
Spanwidth = 119cm, corde = 39cm, width at tip = 23cm. 160 grams bare foam. after gluing, coating and carbon sticks was mounted it got up to 265 grams.
This nice brand new wing was a gift from Peter B. Thanks alot, I started next nite to make this one ready.
Motor is Brushless MEGA 22/10/6 prop is 9x3.8 slowfly, battery 2 x KAN1050 packs 8 cells in parallel
(5-15 min flying time depending on fun level) Schulze RX. two mini dymound servos.
See all the pictures from the complete wing construction and test flying videos goto bottom for BL motor

---

My 7th. Plane is a Chicken

Wing span = 105cm, Length = 71cm,
Weight without battery = 380 grams after painting (25 grams of paint in total)
Weight with 8 KAN1050 900mAh = 565 grams
Weight with 4 LIPO1050 2000mAh = 485 grams

My 8th. Plane is a FunTastic 3D

[illegible]

[illegible]

[illegible]

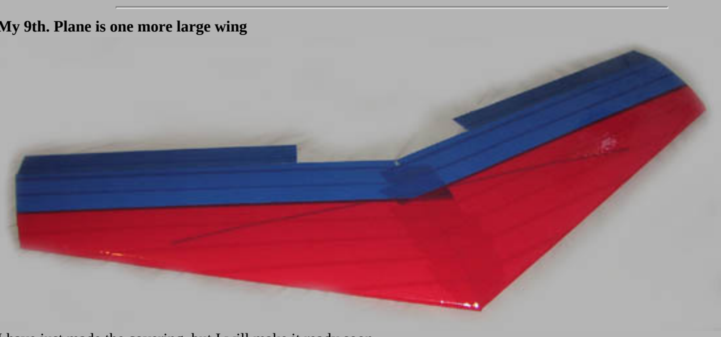

[illegible]

[illegible]

My own RC boat

My 1st. boat

This one was a gift to me and my kids, it's a Robbe RP3 really huge 92cm long, a lot of details was made super nice
The radar is connected to a motor with gear so it can rotate. The little rescue boat can be lifted into water.
I have installed an old 27Mhz reciever and an old big servo, The homemade motor regulator is Glued into silicone glue to protect in from water.
The battery room is made so the heavy battery packs can be placed as low as possible.
The inside of the boat is filled with white foam and anti sink expanding foam.
The bottom the the boat was filled with 2 kg iron and lead to make it stable. The rudders and screws
To test this boat at home first I had to make my own water bowl, but it works and fits the boat perfectly and it costed nothing
More Pictures: My kids with boat - In water31 - In water34 - In water35 - In water36

My own RC Cars

My 1st. Car

My first few RC car's I had many many years ago when I was a kid. So this 1st. car is some of them I have now.
This one is a Monster Beetle from Tamiya with servo steering and 5 forward and 5 backward electronic speed levels.
It uses 27MHZ normal propotional Pulsecoded AM modulation. see car with my kids

---

My 2nd. Car

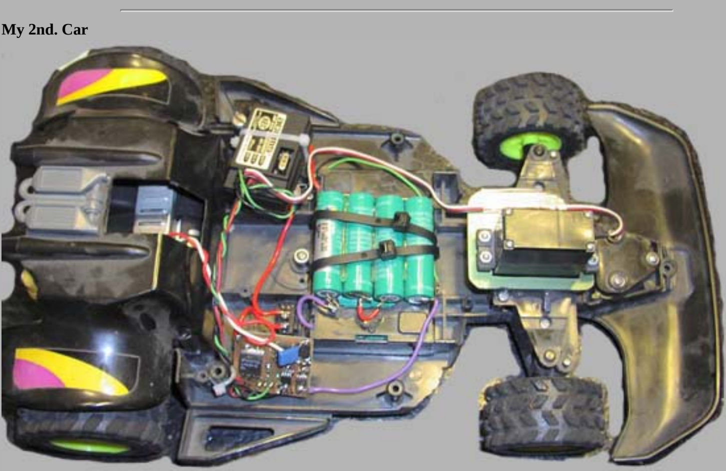

I got this crap toy car from a flea market for almost nothing, then I modified the sterring to real servo control.
Servo mod1 - mod2 - mod3 - mod4 - mod5
I added my own homemade motor regulator with brake option.
The motor size was almost a Speed 300 so I changed the motor to a SP300 7.2 Volt, the battery pack is 10 Cells AA 1600 NIMH.
This car goes super fast so it's a lot of fun driving it.

My 3rd. Car

 -

This is a brandnew (August 2004) Thunder Tiger 3.5ccm metanol offroad monstertruck (MTA-4)
It is real 4WD with automatic speed controlled 2 speed gearbox. Forward/reverse made using a 3rd servo.
Pictures: At the field - Ready to jump - Crash !! alot of times - Speeding up - Fuel Refilling - Flying HI speed ! - Repair simple
Play the videos at 1:1 scale else they will look bad due to hi compress.
Videos: Hi speed - Lucky landing - Jump and curve - Jump and hit wife !! - Good jump but too fast
Modifications: Cooling Holes - Reso pipe - Reso and original - Shock absorber original - Socks added 1 - Socks added 2
Adding the Tuned reso pipe # PD0418 from Thunder Tiger did not lower the noise or boost performance when I was running on 16% nitro
Later that day I changed to 25% nitro fuel, NOW I could see and fell more acceleration and a bit more top speed.
I dont know if this performance gain would have been the same with the original pipe.. but it is still TOO noisy !!
After changing from 16% to 25% nitro I could lower the idle rpm and still keep it stable, it also starts better.
Adding socks prevent dirt and dust from comming into the shock absorbers, giving them a lot longer lifetime.
The braking spring was WAY to long and too thin, I have changed it to 20mm fuel hose, now the brake system works.

Some of my remote control transmitters



Some are sold, some are in the bin, others are new and in use, the rest I keep just for funny projects or for my kids.

LINKS

www.rc-unionen.dk/nytforum Dansk RC forum
www.rcuniverse.com English RC Forum
www.flightlines.com English RC Forum
RC switch
Das Corsair-BBS Dateiarchiv im Internet Modellbauelektronik
TwinStar with camera and crash pictures
Much more about Real Time Video from RC planes
Claus Urbach click on Modellbau
Gunter Kreutz many EL planes many pictures
LRK brussless motor info and pictures
EFK87 Elektro Flying Klub

SHOPS

www.batt-mann.de Akku und modelbau
www.dinohobby.dk tlf 27 49 40 95
www.djurshobby.dk
www.el-fly.dk tlf 98 43 48 72 (1530-18)
www.hobby-world.dk tlf 75 72 22 95 (10-13 og 15-17:30)
www.holte-modelhobby.dk tlf 45 42 01 13 (930-1730 mandag lukket)
www.iccom.dk tlf 36 17 85 33 (1000-1730)
www.iv-hobby.dk
www.leif-o-hobby.dk tlf 98 31 94 22 (1300-1800)
www.overfly.dk
www.silverstarmodels.dk
www.staufenbiel.com German web shop
www.towerhobbies.com
www.witzel-hobby.com tlf 57 67 30 92 (1100-1730)
www.maaetoft.dk tlf 86 43 61 00
www.nessel-elektronik.de

((Set to 100 the 26th jan 2004)) This page and several sub pages are updated June 2004

RC Model related Circuits
- Speedcontrollers
- Charging Circuits
- ServoGoSlow
- Mixer
- Servotester
- Modelfinder
- Receiver
- Batterytester

Some Infos
- PPM/PCM
- RC-Oscillograms

Microcontroller Programmer
- PIC16F8xx
- AVR

Links
- RC Modelling
- Electronics

Workshop
- UV Source
- Making PCB's

RC Forum

Contact

Disclaimer

Welcome to my

RC Electronics Page

For those who not only fly, but also like to build electronic circuits

Speedy-Brushless

NEW **SBL-Micro**

BL Controller for Slowflyer

Last update: ***2004***

Deutsche Version

Welcome to Allt om Hobby

Main page
The Magazine
The Book Publisher

Links (swe):

Rutger's pages
Associations
Swedish links
Nordic links
World wide links
H0-vehicles
Railroads
Mainpage train

Welcome to Rutger Friberg's world of

Model Railroad Electronics

Rutger Friberg is Model Railroad and Electronics editor in the leading Scandinavian MR Magazine "Allt om Hobby" since more than 20 years. Rutger is also author of a series of books in the area of MR Technology as well as co-author of Hobby and Technology books in Scandinavia. For many years (since1988) Rutger has also on a regular basis been giving seminars and workshops for broader audiences around the MR and technology topics.

Since1991 Rutger has been member of the DCC working group within the NMRA technical committee and instrumental in bringing the Digital control system to the level of a National Standard in the US.

In this context Rutger has also been giving a great number of clinics at each National Convention since 1992.

Rutger is working hard to get new kids into model railroading, he developed the Junior Collage Programme and introduced it at the NMRA Convention in Kansas City in 1998. This programme has since then been very popular and been held in many places in Asia and Europe as well as yearly at the NMRA conventions.

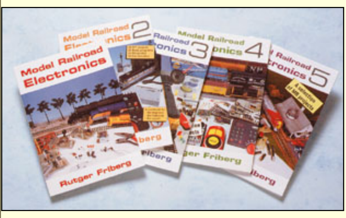

Books by Rutger:

Model Railroad Electronics 1

- many easy projects for both beginners and more advanced.

- Updates to book 1
- Extra bonus project 1: Blinking lights
- Extra bonus project 2: Flashing railroad crossings- two versions
- Extra bonus project 3: Flashing lights - for a roadwork warning and a train shop sign.
- List of content - book 1

Model Railroad Electronics 2

- the book about digital trains. A must for everybody.

- Book 2: Extra bonus project 1: F1-F4 functions tester
- Book 2: Extra bonus project 2: Engine code tester
- Book 2: Extra bonus project 3: Sound control decoder - a sound system built from an electronic greeting card.
- Book 2: The Magic Engine - litt Tb - a DIY-project: extract from the book.
- List of content - book 2

Model Railroad Electronics 3

- more projects.

- Book 3: Extra bonus project 1: A coach electrical system, H0 and N
- Book 3: Extra bonus project 2: Train Electrical system 1, H0 and N
- Book 3: Extra bonus project 3: Train Electrical system 2 - for three coaches, H0 and N.
- Book 3: Extra bonus project 4: Train Electrical system 3 - Railcar Electrical system
- Book 3: Extra bonus project 5: A universal Track tester for the Layaout, for H0 and N. Revised
- List of content - book 3

Model Railroad Electronics 4

- Book 4: Extra bonus project 1: Booster and Interface with Feedback
- Book 4: Extra bonus project 2: The Märklin 7051 Crane converted to DCC
- List of content - book 4

Model Railroad Electronics 5

- Book 5: Extra bonus project 1: Turnout Position Indicator
- Book 5: Extra bonus project 2: Digital Turnout Indicator
- List of content - book 5

Model Railroad Electronics 6

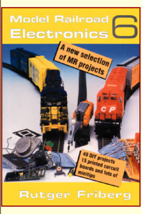

- Book 6: Extra bonus project 1: KRAFT 3 decoder for turnouts with trackbed
- Book 6: Extra bonus project 2: KRAFT 3B for electric uncoupler
- Book 6: Extra bonus project 3: Replacement for LDE 20 Integrated Circuits
- Book 6: Extra bonus project 4: Updated DCC Panel with Status Indicator
- Book 6: Extra bonus project 5: Download PCB layouts

The comprehensive guide to Digital Command Control

... by Stan Ames, Rutger Friberg & Ed Loizeaux - was published in July 1998 and updated one year later. This book is a a must for all model railroaders, written by the three leading experts in this field.

Read what the readers write about the books

More to read ...

- A complete list of articles about model railroading written by Rutger Friberg and published in Swedish. Sorry but this information is in Swedish but you can expect that some of it will be translated and published later in a special edition.
- Stay tuned to this page for more information, updates and maybe some new extra bonus projects.

How to order special components

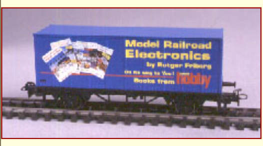

We have produced a special container car at Märklin for the buyers of our books. This special limited edition is only sold by Märklin Inc in the USA and by Allt om Hobby in the rest of the world. Our price is SEK 400 including shipping anywhere in the world (except USA). Maximum 2 cars per buyer together with purchase of books.

Extra offer: For a limited time - until the end of the year 2001 - we will send this car for only SEK 280 including shipping if you pay with your credit card (Visa, Mastercard).

Limited edtion. US custumers - call Märklin Inc.

Buy the books!

Model Railroad Electronics ISBN 91-85496-73-1 Price SEK 187:-
Model Railroad Electronics 2 - Digital trains ISBN 91-85496-82-0 Price SEK 187:-
Model Railroad Electronics 3 ISBN 91-85496-91-X Price SEK 187:-

Model Railroad Electronics 4 ISBN 91-85496-51-0 Price SEK 187:-
Model Railroad Electronics 5 ISBN 91-85496-52-9 Price SEK 187:-
Model Railroad Electronics 6 ISBN 91-85496-98-7 Price SEK 187:-
Digital Command Control ISBN 91-85496-49-9 Price SEK 187:-

In the US you can buy these books from many Märklin dealers, from Highland Station (Model Railroading Magazine) and from some other well-stocked model railroad shops, see the list!.

Normal retail price in the US is $ 18,75 each for book 1, 2, 3,4, 5 and 6. Same price for **Digital Command Control.**

If you live outside the US you can order direct from Sweden or from a local distributor.
Order via fax to int + 46 899 8866 or by e-mail to the publisher. Mention your Visa/Mastercard/AMEX number and expire date.

If you are in Stockholm you can visit the shop Hobbybokhandeln at Pipersgatan 25 (behind Hotel Amaranten) where all of our books are on sale.

Books from
ALLT OM hobby

Ask for them in your shop!

E-mail publisher: freddy.stenbom@hobby.se
E-mail author: rutger.friberg@hobby.se
Return to **Homepage** for Allt om Hobby Publishing Co.

Visits after 5 april 2004: 012323
253535 visitors from February 1996 thru April 05 2004.

Peak Electronics, Inc.

934 East Houston Ave.

Gilbert, AZ 85234

Voice: (480) 558-1996

Fax: (480) 558-1527

ABOUT US

Peak Electronics, Inc. provides top quality battery maintenance products and radio accessories to the discriminating modeler.

Peak Electronics, Inc. was formed in March 2000 for the express purpose of purchasing “Sirius Electronics”, which we acquired in April 2000. We moved the business from Beaverton, Oregon to Poway, CA.

In April 2001 we acquired “Custom Electronics” of Higginsville, MO and moved it to our facility in Poway, CA.

We continued to operate the businesses from that location until Oct. 2003, at which time we moved the operation to Gilbert, AZ. We are continuing to operate and grow from this facility.

As of Oct. 2004 we are proud to say that we have 30,000 battery maintenance products functioning in the field (Chargers, and testers).

A **BIG THANK YOU** to all our loyal customers.

George Joy President

Jo Joy CFO

Alan Metzger VP of Engineering and Operations

John Baird Senior Technician

Products Diode Sheets Prices FAQ's

Demonstration project no 1

- extra bonus project for buyers of Model Railroad Electronics 1

Blinking lights

powered by AC, DC and batteries

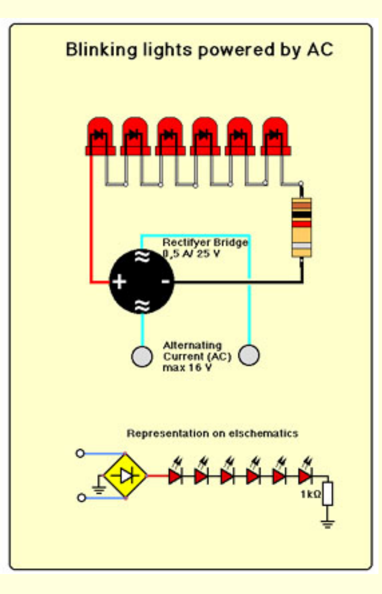

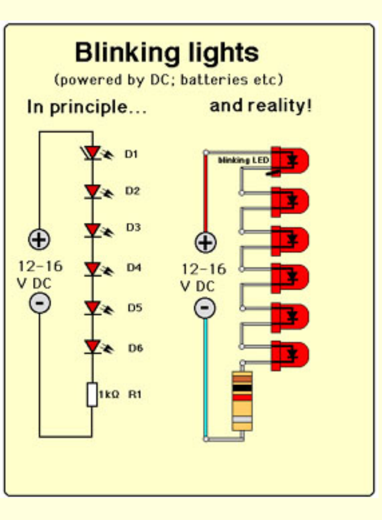

Visits after 3/4-96:
200 visits during February and March.

Return to Model Railroad Electronics 1
Return to Homepage for Allt om Hobby Publishing Co
E-mail publisher: freddy.stenbom@hobby.se
E-mail author: rutger.friberg@hobby.se

Demonstration project no 2

- extra bonus project for buyers of Model Railroad Electronics 1

Flashing railroad crossing

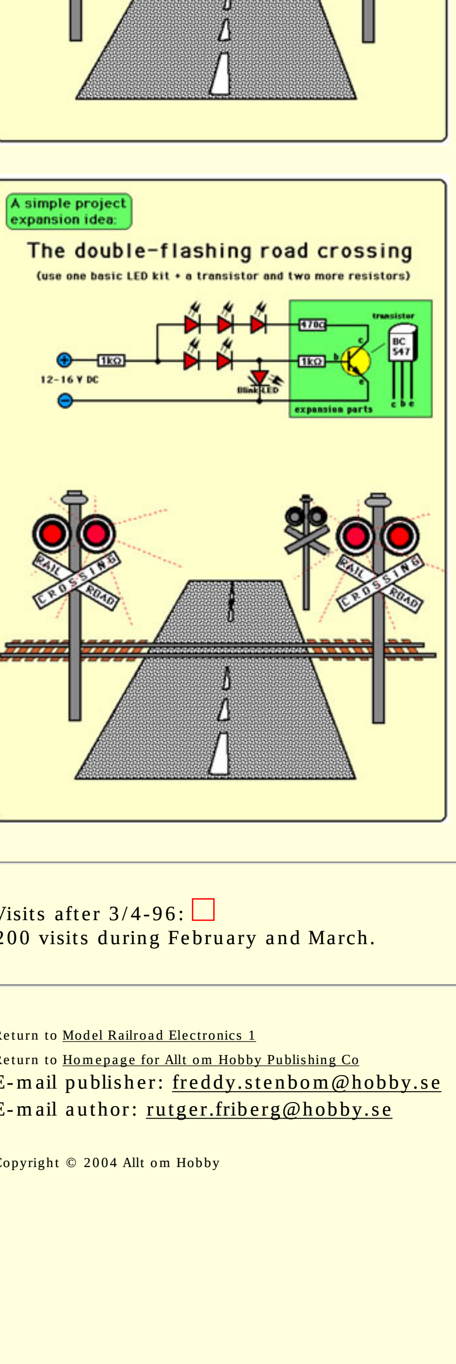

Visits after 3/4-96:

200 visits during February and March.

Return to Model Railroad Electronics 1

Return to Homepage for Allt om Hobby Publishing Co

E-mail publisher: freddy.stenbom@hobby.se

E-mail author: rutger.friberg@hobby.se

Demonstration project no 3

- extra bonus project for buyers of Model Railroad Electronics 1

Flashing lights

for roadwork warning and shop sign

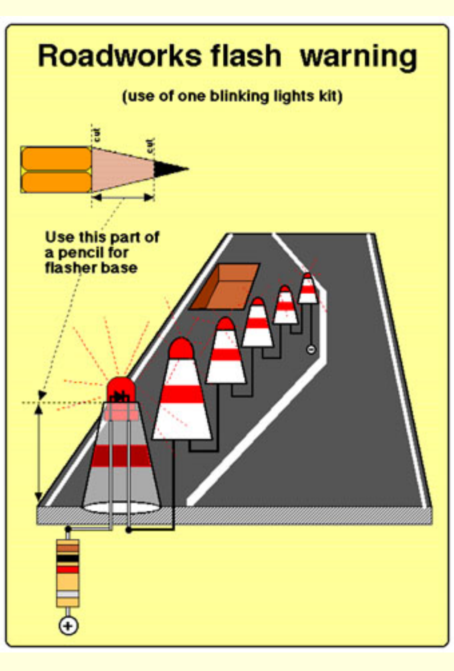

Visits after 3/4-96:
210 visits during February and March.

Return to Model Railroad Electronics 1

Return to Homepage for Allt om Hobby Publishing Co

E-mail publisher: freddy.stenbom@hobby.se
E-mail author: rutger.friberg@hobby.se

Table of contents - Book 1 - Projects for beginners

Updates to Model Railroad Electronics 1

Update page 11:

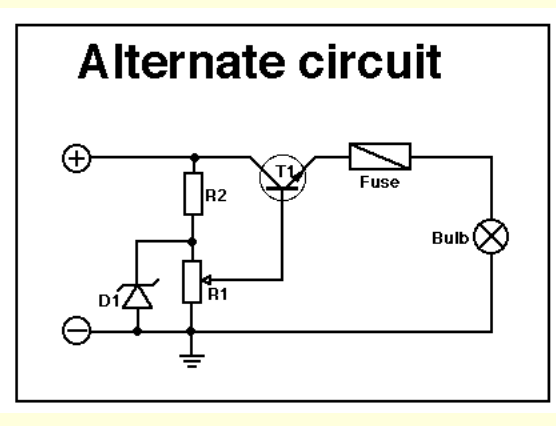

Update page 21:

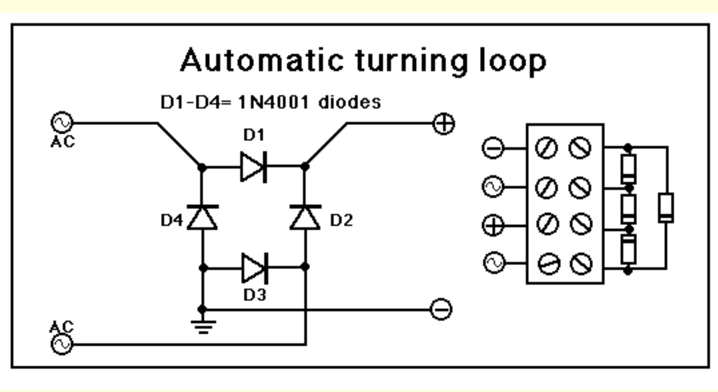

Update page 23:

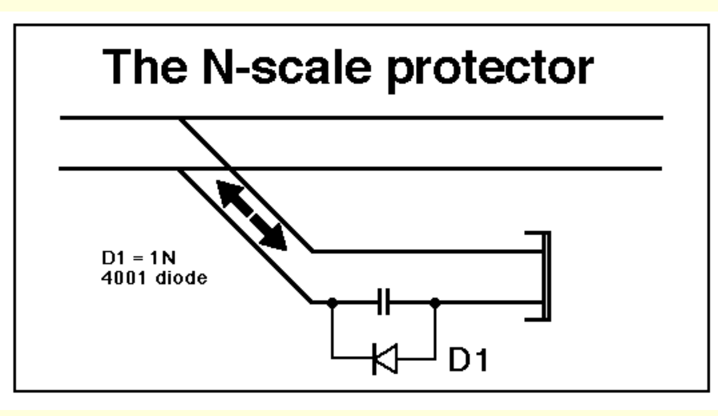

Update page 59:

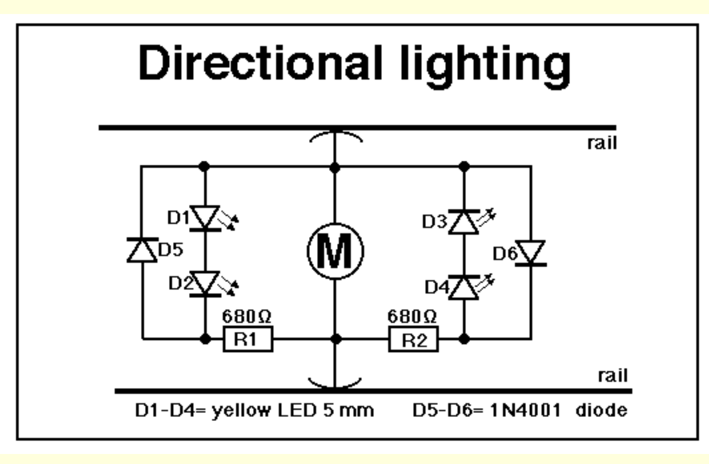

Update page 61:

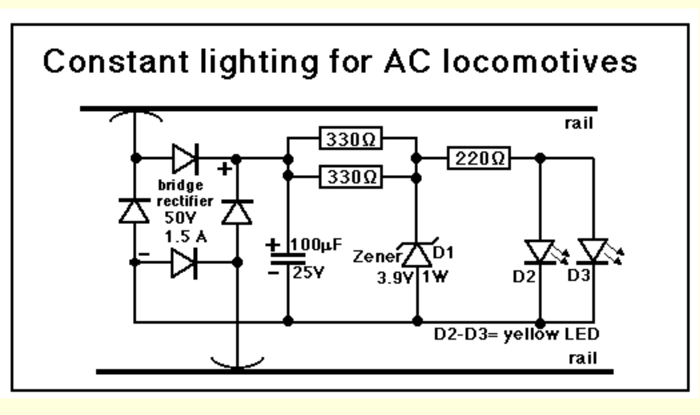

Visits after 3/4-96 är:
200 visits during February and March.

Return to Homepage for Allt om Hobby Publishing Co

E-mail publisher: freddy.stenbom@hobby.se
E-mail author: rutger.friberg@hobby.se

Demonstration project no 1

- extra bonus project for buyers of Model Railroad Electronics 2

F1-F4 Functions Tester

As remarked earlier there is in the book an extensive tester T80 for the Marklin digital system in H0. It is one of the major projects and it is supposed to be assembled on a premade PCB.

This project , which comes additional to the DIY-projects in the book has unique testing capability in that it can extract the extra functions signals from the engine code and indicate those in a simple manner. So it is a complement to the T80 and very simple to build. Totally 16 discrete components and an IC are soldered together on a piece of experimental board (i.e. Veroboard) and you get this module to operate.
The DIL selector is electrically a 4 times SPDT which gives the input pins 1-4 each a choice of signal ground (= logic LOW), or open, or IC-plus (= logic HI). That corresponds to the selector of the T 80 and more theoretical explanations may be found in that section of the book. There is also a complete code guide in the book should you have lost the one that came with the Marklin central control unit. Please note that in this project the pin #5 of IC1 is connected to IC-plus.

To get the right voltage level for the module there is a zener diode D1 parallel to a capacitor C1. Additional voltage drop is achieved through D2 (also rectifying the power) and R4. In order to get correct timing for the IC there are two oscillators R2-C3 and R3-C2. More detailed theory on how to calculate their values is found at the end of the book in the components section.

Finally to four of the outputs there are LED´s connected and two current limiting resistors in series with them.

How to use the tester

Start with power off and connect each clip to appropriate rail (red to center rail and brown to one of the outer rails on the track).

Next power up the system to be tested. Now is a good time to select the correct engine code both on the tester and on the central control / control 80f. If power is correctly distributed to the track (red light on central unit is lit) and you have matching codes, you should now be able use the F1 through F4 function keys on the control 80f and get appropriate LED on the tester to be lit. Any combination should be possible to lite up.
By this "signature" of light you will get a feedback from track that a matching address code is distributed and that wanted data commands also get through. So it is likely that the code and power is correct. If nothing shows on the display do check that the transmitted engine code (selected via the keys 0-9 on control 80f-unit) is the same as the received code (selected via the DIL-switch on the tester). If that still doesn't help then the code is simply not present for the tester to read.

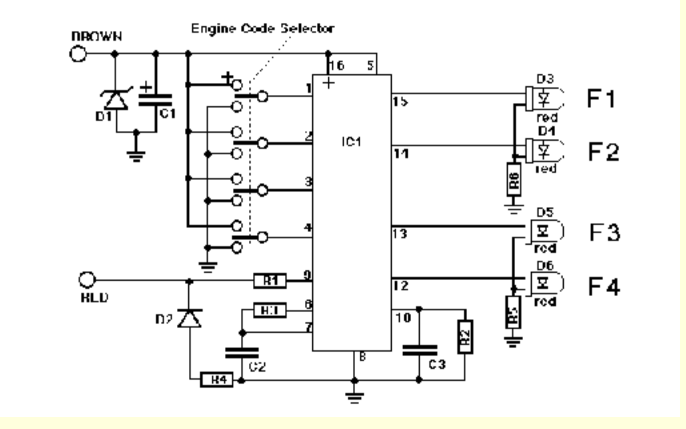

Parts List - Functions Tester

IC1 MC 145027 Motorola chip
D1 8.2 V Zener Diode 0.4 W
D2 1N4001 Diode
D3-D6 5 mm red LED
C1 10V / 16V electrolythic Cap
C2 2.2 nF Capacitor
C3 4.7 nF Capacitor
R1-R2 270 kOmega 1/8 W Resistor
R3 12 kOmega 1/8 W Resistor
R4 2.7 kOmega 1/8 W Resistor
R5-R6 150 Omega 1/8 W Resistor
ECS Selector DIL-switch
PCB Experimental PC-board

Return to Model Railroad Electronics 2

Return to Homepage for Allt om Hobby Publishing Co

E-mail publisher: freddy.stenbom@hobby.se
E-mail author: rutger.friberg@hobby.se

Demonstration project no 2

- extra bonus project for buyers of Model Railroad Electronics 2

Engine Code Tester

The book reveals a full flavour all functions tester T80 for the Marklin digital system in H0. That is one of the major projects and it is supposed to be assembled on a premade PCB.

This project comes additional to the DIY-projects in the book. It is an economy version of the T80 and very simple to build. Totally 15 discrete components and an IC are soldered together on a piece of experimental board (i.e. Veroboard) and you get this module to operate.
The DIL selector is electrically a 4 times SPDT which gives the input pins 1-4 each a choice of signal ground (= logic LOW), or open, or IC-plus (= logic HI). That corresponds to the selector of the T 80 and more theoretical explanations may be found in that section of the book. There is also a complete code guide in the book should you have lost the one that came with the Marklin central control unit. Please note that in this project the pin #5 of IC1 is grounded.

To get the right voltage level for the module there is a zener diode D1 parallel to a capacitor C1. Additional voltage drop is achieved through D2 (also rectifying the power) and R4. In order to get correct timing for the IC there are two oscillators R2-C3 and R3-C2. More detailed theory on how to calculate their values is found at the end of the book in the components section.
Finally to three of the outputs there are LED´s connected and current limiting resistors in series with them.

How to use the tester

Start with power off and connect each clip to appropriate rail (red to center rail and brown to one of the outer rails on the track).

Next power up the system to be tested. Now is a good time to select the correct code both on the tester and on the central control / control 80f. If power is correctly distributed to the track (red light on central unit is lit) and you have matching codes the orange LED should be ON. You should now be able to rotate the speed knob and get various light combinations on the green and red LED´s. A reverse command by the knob should produce a red light, and most speedsteps will be indicated.

By this "signature" of light you will get a feedback from track that a matching address code is distributed and that various data commands also get through. So it is likely that the code and power is correct. If nothing shows on the display do try the OFF- Light key on the central unit. If that still doesn't help then the code is simply not present for the tester to read.

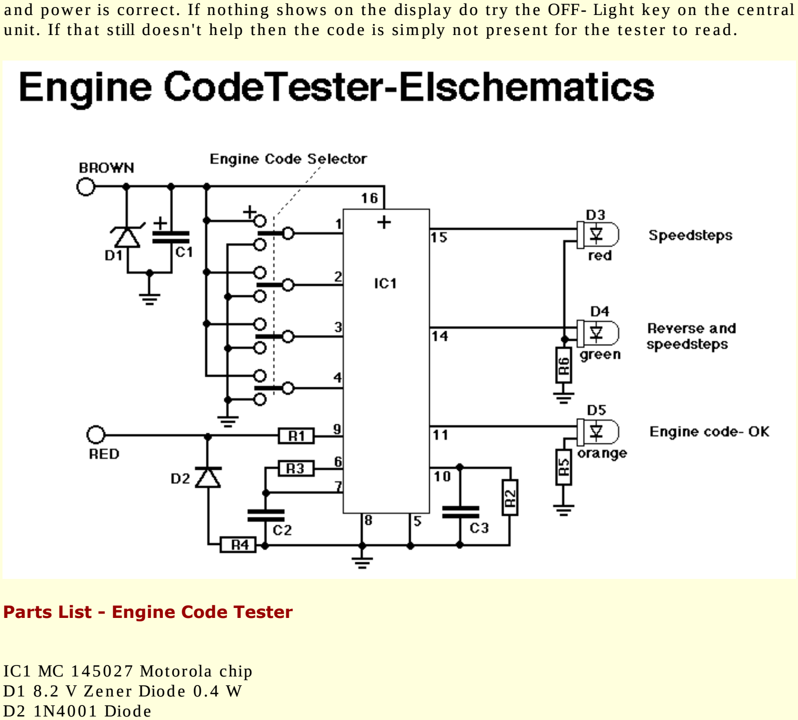

Parts List - Engine Code Tester

IC1 MC 145027 Motorola chip
D1 8.2 V Zener Diode 0.4 W
D2 1N4001 Diode
D3 5 mm red LED
D4 5 mm green LED
D5 5 mm orange LED
C1 10V / 16V electrolythic Cap
C2 2.2 nF Capacitor
C3 4.7 nF Capacitor
R1-R2 270 kOmega 1/8 W Resistor
R3 12 kOmega 1/8 W Resistor
R4 2.7 kOmega 1/8 W Resistor
R5 470 Omega 1/8 W Resistor
R6 150 Omega 1/8 W Resistor
ECS Selector DIL-switch
PCB Experimental PC-board

Visits after 3/4-96:
200 visits during February and March.

Return to Model Railroad Electronics 2

Return to Homepage for Allt om Hobby Publishing Co

E-mail publisher: freddy.stenbom@hobby.se
E-mail author: rutger.friberg@hobby.se

Demonstration project no 3

- extra bonus project for buyers of Model Railroad Electronics 2

Sound Control Decoder

from a Hallmark greating card

There are several decoders in the book as Do-It-Yourself projects. Perhaps no-one is as simple as the one revealed here. Certainly this project is unique by its sound performance. Today on the market there are several electronic greeting cards (EGC`s), intended for you through your recorded voice and via mail to reach someone to hear it and be celebrated.

This project , which comes additional to the DIY-projects in the book, makes use of the most common EGC on the market, the Hallmark greeting card, the so called Chipcorder with unique voice and sound recording IC from ISD Technology (US). For this project the EGC:s for about 8 USD.
Totally 9 discrete components , an IC and parts from the EGC are soldered together on a piece of experimental board (i.e. Veroboard) and you get this module to operate.

The DIL selector is electrically a 4 times SPDT which gives the input pins 1-4 each a choice of signal ground (= logic LOW), or open, or IC-plus (= logic HI). That corresponds to the selector of most of the decoders in the book and more theoretical explanations are frequently found in the book. There is also a complete code guide in the book should you have lost the one that came with the Marklin central control unit. Please note that in this project the pin #5 of IC1 is connected to IC-plus.

In order to make the decoder as compact as possible you might want to omit the selector and make a once-for all choice of the code. Once you have done that selection simply connect each of the pins #1-4 to appropriate logic level.

To get the right voltage level for the decoder there is a zener diode D1 parallel to a capacitor C1. Additional voltage drop is achieved through D2 (also rectifying the power) and R4. In order to get correct timing for the IC there are two oscillators R2-C3 and R3-C2. More detailed theory on how to calculate their values is found at the end of the book in the components section.

How to connect the electronic greeting card The first thing to do is to record the sound you later want to be able to remote control. It might be a voice message. But it may also be a specific sound that you already have recorded on tape or (the best) on a CD.

Let's assume that you have the wanted sound recorded "onboard". For your information the EGC comes with a small battery pack of 4 x 1.5 V button cells, and the recorded sound will not disappear even if the power is disconnected for very long periods of time.

Disassemble the EGC and save the EGC- module together with loudspeaker and battery pack. Note that the activator when opening the card has one black lead and one green. Those two are to be connected to our decoder, as shown on the elschematics. If you are familiar with electronics you can also make a power connection via a 7805 voltage regulator IC and thereby omitting the battery pack. However you should know that the pack is very powerful and will give you a substantial number of "sound shots".

Also note that we in this project use the F1-key which is equal to the pin #15 connection. You might want to use any of the other keys F2-F3 then instead selecting pins # 12-14.

How to use the decoder

Before installing the decoder just make a simple function test. Connect it to where it is most easy on the layout. This might just be directly to the outputs of the central unit /central control. Be sure to match correct colors on the clips, since the IC 1 (although not getting lost) is particular about polarity.

Let us for a second assume that on the selector of the decoder you left all pins # 1-3 open and only grounded pin #4. That is then equivalent as engine code 26. So on control 80f you should now key in #26 and then use the F1 key.

If it works as intended you should now hear the sound, and it will be played through one full cycle (about 10 seconds). Certain sounds, such as whistles and bells, you might want to control in length of playing time. Simply by pressing the F1 key once more the sound will stop immediately, and it is on the spot ready to be played from start again by yet another press on the F1-button.

The tiny combination of decoder and sound module may be mounted within cars and coaches, as well as stationary anywhere on the layout. Simply make sure that it is connected to the digital bus coming from the Marklin Central unit (= nearest track). You may want to select a smaller loudspeaker to be able to mount it inside a car or coach. In that case use a 8 ohm loudspeaker and try to glue it firmly to the chassi of the car, not leaving to much of open holes around it where vibrating "air" can spill through from front to back of the membrane (you loose sound power that way).

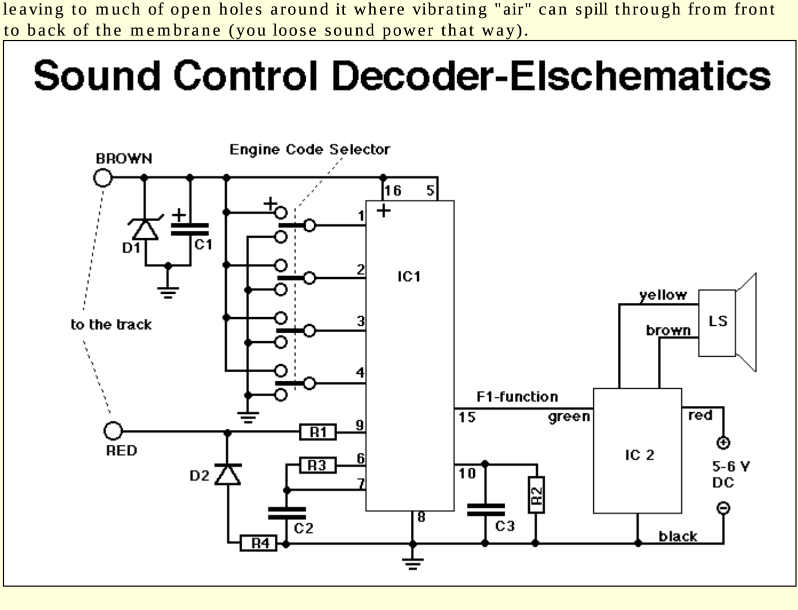

Parts List - Sound Control Decoder

IC1 MC 145027 Motorola chip
IC2 Hallmark Electronic Greating Card (Chipcorder)
D1 8.2 V Zener Diode 0.4 W
D2 1N4001 Diode
C1 10V / 16V electrolythic Cap
C2 2.2 nF Capacitor
C3 4.7 nF Capacitor
R1-R2 270 kOmega 1/8 W Resistor
R3 12 kOmega 1/8 W Resistor
R4 2.7 kOmega 1/8 W Resistor
ECS Selector DIL-switch
PCB Experimental PC-board
LS Your choice of Loudspeaker

Return to Model Railroad Electronics 2
Return to Homepage for Allt om Hobby Publishing Co

E-mail publisher: freddy.stenbom@hobby.se
E-mail author: rutger.friberg@hobby.se

Welcome to Rutger Friberg's world of Model Railroad Elektronics

The Magic Engine - litt Tb

Extract from the book "Model Railroad Electronics 2" A unique model of litt Tb from Swedish Rail:

88 tons and a built-in turntable

Wintertime i Northern Sweden, above the Arctic circle. Snow depth is well over 1,5 meter. The export route via rail for iron ore to Narvik i Norway must be kept open. That's the task for the Tb-engine!

Litt TB is unique. It´s a giant engine with plows and it is the only loco in the world with built-in jack-up turntable to actually turn around on the track and settle for homebase if it gets stuck in to heavy snow.

The model is unique. It´s built in H0 and has the same functions as the original - remotely controlled from the manoeuvre panel. The model is scratch built and one of its kind. The project was only possible through use of latest fine mechanics, new driveline ideas and the Märklin Digital technology.

This has always been my dream project No.1. I have kept it for years in my "secret drawer" and it has until now not been possible to realise from a technical point of view.

First there was no H0-model from any manufacturer. Second there was no design for a built-in jackup turntable in H0; third reason was that electronic components used to be too big, and last but not least; the need for a DCC (digital command control) remote control system such as Märklin Digital.

Finally there is SMD, the surface mount technology with very small components. But still big enough for a hobbyist to build control modules yourself with normal available tools and soldering station. And with the help of the eminent Märklin Digital it was possible to build in very tiny modules to control not least than 3 electric motors, normal front and tail lights, and special side flash lights.

The dream formula is found

I am not a true modeler. I don't have the skills and patience to sculpture every rivet and bolt, every bar and handle that have to be there. Still I wanted to realise this project and therefor with some help made a prototype out of plexi and glued the parts together. Now professionally made H0-models of the Tb are found in Swedish hobby shops, and they are in fact much better detailed than my prototype. My model is hand painted and all details are simulated via "Lettraset" and "Formaline Graphic Art Tape".

The most critical mechanical problem was to design the jackup turntable, using one Robbe (Kleinstgetriebemotor) motor No. 4125 for the lifting operation and a Graupner motor with gear ratio 1670 :1 (6V) for the turntable. Total inner width was only 18 mm, thereby creating difficulties since the motors had almost same size and needed to be mounted off centre in order to let gears be positioned correctly.

The Swedish company NOHAB manufactured the litt Tb based upon chassi from T43, a classic diesel engine of the Swedish Rail. So I also based my model on the same original. Luckily enough Lima has a T43 in its standard stock and parts from such a sample were used. Photos enclosed to this article show how the chassi was cut in half and prolonged via a brass middle section, hosting the jackup turntable.

No space for the driveline motor!

The original Lima design uses a rather big electric motor inside the cockpit of the T43 engine. Now Tb is more narrow in design and cockpit is too far front to allow space for the motor and the weight of it.

The solution was a powered low profile motortruck from Tenshodo, that would fit under the chassi, letting the interior space for electronics The second truck was used as is, mainly hosting the pickup shoe for the middle rail in the Märklin system.

Early tests of the lifting and turning mechanisms were conducted with all electronics exterior to the engine itself (see pictures). Suddenly a new problem was identified in that the current supply was cut in that very moment when the pickup shoe was lifted high enough to leave the middle rail. All functions died and it wasn't even a simple task to bring the engine down again. A separate wire had to be connected until a more permanent solution was found.

A second pickup shoe was designed and mounted on the lower crossbar of the turntable, since this is the only part being in contact with the track during the turning operation.

Further the lifting mechanism had to be redesigned during the building process since the ordinary pickup shoe, hanging down a few millimetres extra to make good contact with the lower middle rail, otherwise would make a short circuit towards the outer rail when the loco was being turned around. From a demonstration point of view it is the worst thing to happen if getting a short at this point.

Specially designed decoder

Having moved the main motor down to the truck itself made it possible to host a Märklin C81 decoder inside the cover in the aft part. Still there were two other motors that needed remote control and this created new problems to be solved due to following reasons. One is obvious since the space was very limited. The other was about voltage. Märklin decoder output is around 17 volts and the available motors only accepted 6 volts. Besides that the C81 decoder uses PWM (pulse width modulation) output, meaning that pulses of full voltage occur always, even when motor should run very slowly. That's perfect for ordinary motors, but disastrous for these tiny motors. Finally there was another obstacle. Let's pretend that each motor was controlled via a C 81 decoder. When operating the Control 80 f that would mean having to change address number all the time on a single control unit, or investing in several (at least three) units for this operation.

So the solution was to build a unique and very tiny decoder with capacity to control two motors and operated via the Keyboard. The keyboard offers rapid change of commands, but you need to adjust the voltage output in such a way that the ON-OFF operation is acceptable for a smooth turntable operation. Maybe in the future I can revert to this topic and show the special decoder in another editorial.

Some experiences from frequent demonstrations

Let me briefly address a few of the problems that have occurred and needed special attention. Flashlights on each side of the loco are supposed to be kept on during the whole turnaround progress. So I needed one more extra function and a bistable minirelay inside to provide that. This was a difficult task to perform since it was an add-on coming afterwards.

Secondly you must keep the trucks absolutely aligned throughout the whole lifting and turnaround process. Otherwise the wheels wont fit onto the track but will stay aside of the rails. after many different experiments I found a simple but reliable solution. A very tiny spring (in fact the smallest Märklin spring for a coupler) has enough force to pull the truck in line when in the air, but still when the engine is normally running, let the truck turn in curves.

For full information about this project and components list - please consult the book!

Click here to get additional information and graphics about this project (will take some time to load).

Return to Homepage for Allt om Hobby Publishing Co

E-mail publisher: freddy.stenbom@hobby.se
E-mail author: rutger.friberg@hobby.se

Visits after 3/4-96:
100 visits during March.

TABLE OF CONTENTS - Book 2 Digital trains

Propellar Saver

This prop saver was invented by Claus Urbach from Germany ! Thanks a lot for the idea !
It will save the propellar and motor shaft when landing harder than expected,
on some electric models landing gear is not an option so this saver is the only way.
This prop-saver can be used with brushless and normal electric motors, **DANGER: NEWER WITH GLOW ENGINES !!!**

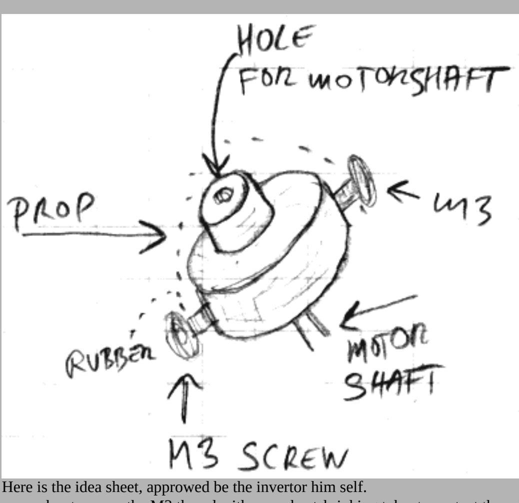

Here is the idea sheet, approwed be the invertor him self.
remember to cover the M3 thread with some heatshrinking tube, to protect the rubber gasket that holds the prop.

The M3 screws I used are 10mm length

The top part where the prop is fitted is made so the prop fits exactly !
remember to make it so the prop is easy to bend over to the side

Note the bottom part is hollowed out so the edge can touch the motor base
This is also important in serious crashes.

See the plastic tube pressed over the screws, where the thick rubber gasket is mounted.

Mounted on small Speed 300 motor

make sure there is a gap from the saver to motor, about 0.2mm

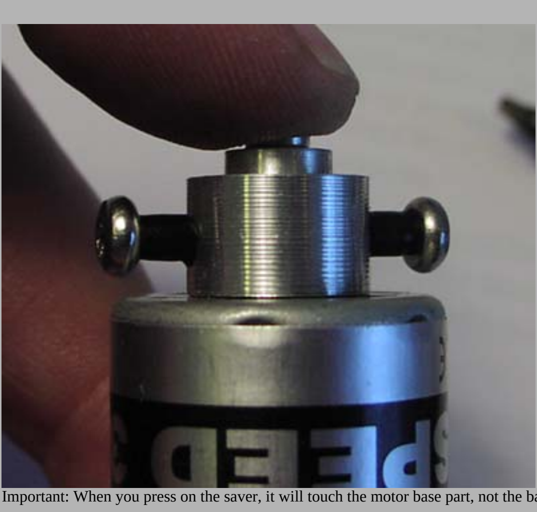

Important: When you press on the saver, it will touch the motor base part, not the baring.

Little 5.7 x 3 prop mounted.

See this looks really prof.

Close up from top.

Using another rubber gasket type

The black type is a bit more strong, and not so elestic; compared to the red one.

24mm diameter

25mm diameter, measured at center.

Prop mounting area is 13mm diameter.

Prop mounting area height is 5.6mm.

The propellar I use for this example is a Robbe 5.7 x 3 (cost about 5 EUR)

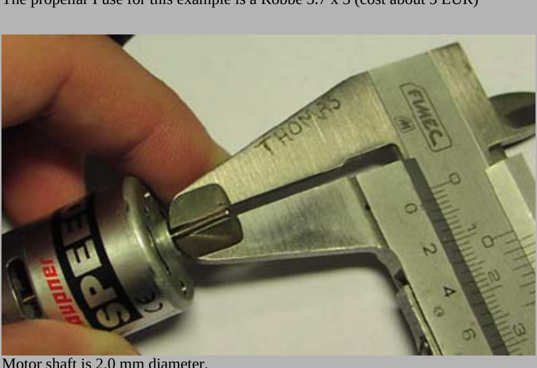

Motor shaft is 2.0 mm diameter.

Warning: When working with propellars extra caution must be taken !
if your prop does for fit perfectly or your rubber band is old, REPLACE and fix it !!
Else you might injure somebody with a flying prop or parts from it !.
Use the information found on this page at your own risk, it is your responsibility to make it safe.
Also make sure battery power is DISCONNECTED before you get yourt fingers near a prop on a plane,
Just shutting OFF or GAS=None with your transmitter is NOT save.
Imagine what happens if a radio disturbance suttently gives a max speed code to your reciever !!
Think Think and Think again; about all the possible things that maybe can go wrong what ever you do.

Made June 2003 OZ2CPU.

Some examples from flying planes
Pictures and planes property Claus Urbach

Brushless.

Brushless 10 x 4.7 prop.

Made for a 10 x 4.7 prop and a 2.3 mm motor shaft

Speed 400 with gearbox:

www.webx.dk Start page
MY little Radio Controll page

Depron Wing

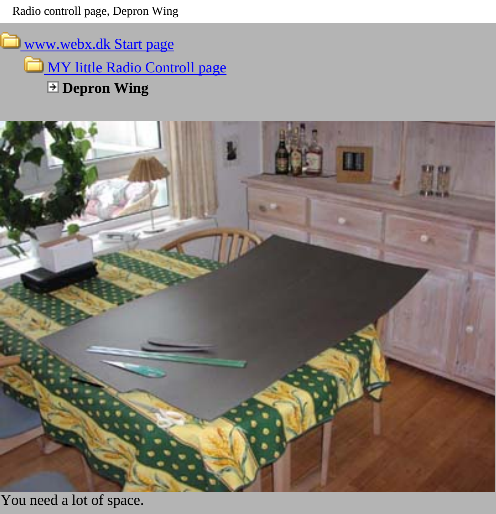
You need a lot of space.


Be carefull when cutting out all the wing ribs, I use 8 so I get extra crash protection :-)
Others that know how to fly and land safe, can use 3-4 ribs.


if you want/need to save 3-6 grames more, you can cut out holes in the ribs (Claus Urbach)


I just draw 10 deep lines using a pen, so the Depron plate can be bend without cracking.

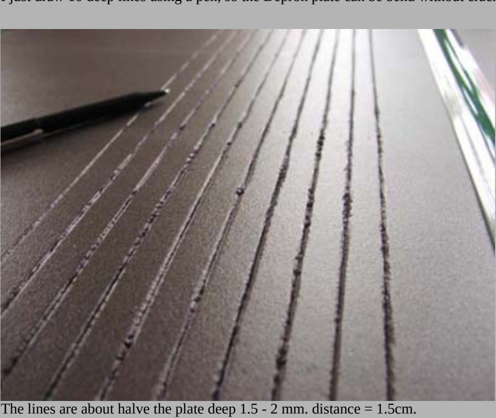
The lines are about halve the plate deep 1.5 - 2 mm. distance = 1.5cm.
Next time I will draw 20 lines, using 7mm distance, to improve the bending.
Also I think using a Pizza cutter will give better results..

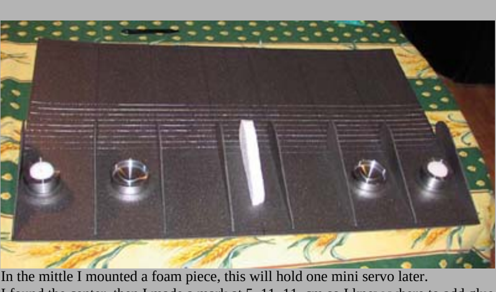
In the mittle I mounted a foam piece, this will hold one mini servo later.
I found the center, then I made a mark at 5, 11, 11, cm so I knew where to add glue later.


After gluing and bending I just took whatever closest to me to hold it for a while.
This wing weight = 65 Grames, Spanwidth = 80 cm, Length = 25, Thickness max = 6 cm

This parkpilot wing weight 75 Grames, I have tried to let them both fall down from 2m height;
the Depron wing falls at almost double the time !!, so more area and less weight is important
when you want to design a plane that can fly slow and save battery power :-)

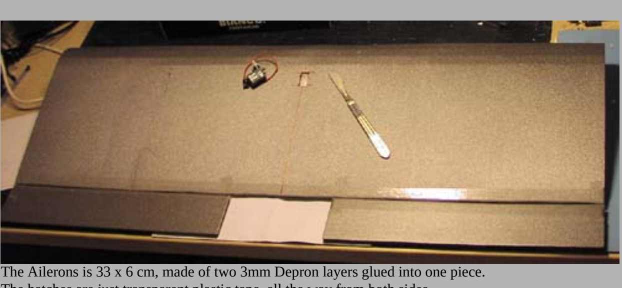
The Ailerons is 33 x 6 cm, made of two 3mm Depron layers glued into one piece.
The hatches are just transparent plastic tape, all the way from both sides.

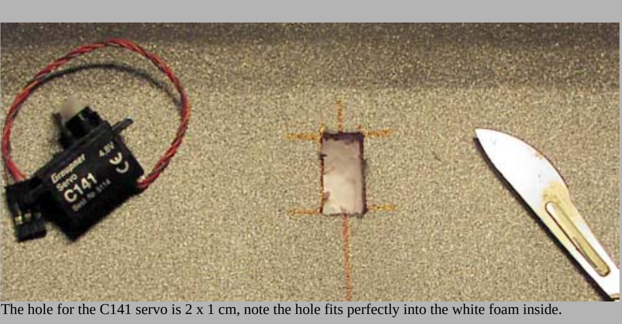

The hole for the C141 servo is 2 x 1 cm, note the hole fits perfectly into the white foam inside.

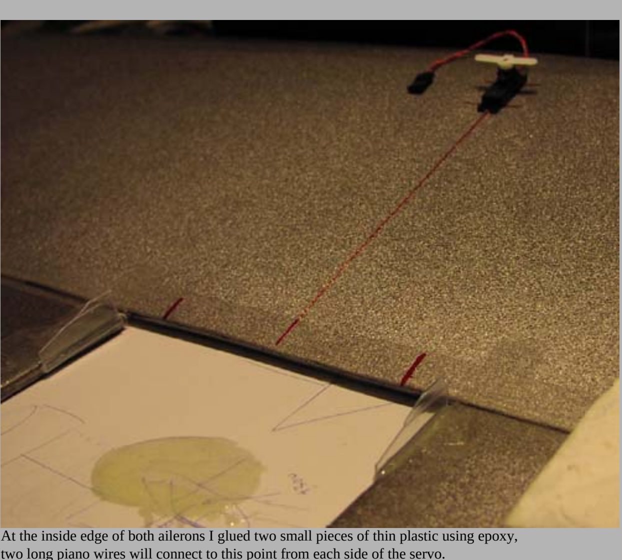
At the inside edge of both ailerons I glued two small pieces of thin plastic using epoxy,
two long piano wires will connect to this point from each side of the servo.
The red markings indicate that here are ribs inside, I will offcourse mount the rubberbands here later.

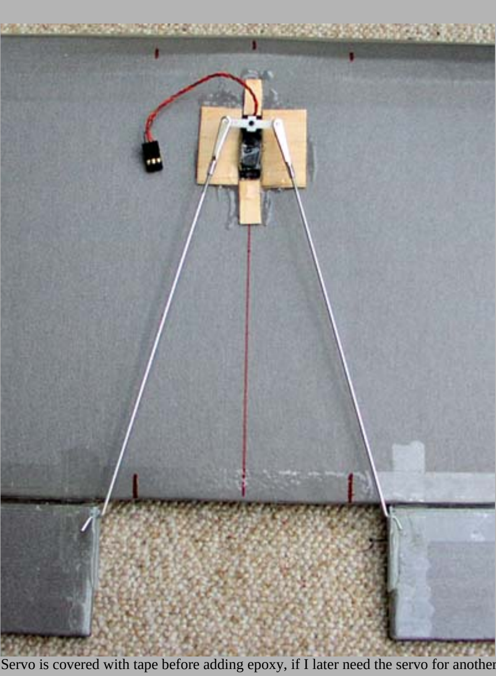
Servo is covered with tape before adding epoxy, if I later need the servo for another project it is easy to save it.
The small balsa wood is to make the servo mounting more strong.
I will glue small balsa pieces onto the red mounting marks to make it much stronger.


Complete wing all included = 100 Grames..A bit more than expected. But still fine, I hoped for 90 grames.

video clip Quicktime 800kb See how fast and good it works, incl transmitter stick movement

BATTERIES IN A PORTABLE WORLD

Home > FAQ
Home | Site Map| Contact Us

Table of Contents
Battery FAQ
New Articles
About the Author
Order Book
Links
Home

Frequently Asked Questions

Which battery chemistry is best suited for my application?

Chapter 2: Battery Chemistries
Chapter 6: The Secrets of Battery Runtime, Increasing Internal Resistance
Chapter 8: Choosing the Right Battery
Chapter 9: Internal Battery Resistance
Chapter 15: Caring for Your Batteries from Birth to Retirement

Is the lithium polymer superior to other systems?

Chapter 2: Battery Chemistries, The Lithium Polymer Battery

What do I need to know about chargers?

Chapter 4: Proper Charge Methods

How deeply can I discharge a battery?

Chapter 5: Discharge Methods

What should I know about temperature extremes?

Chapter 4: Proper Charge Methods, Charging at High and Low Temperatures
Chapter 5: Discharge Methods

Is the 'smart' battery a help or deterrent?

Chapter 7: The 'Smart' Battery

What causes a battery to fail?

Chapter 6: The Secrets of Battery Runtime
Chapter 10: Getting the Most from your Batteries

Does a new battery always perform flawlessly?

Chapter 12: Battery Maintenance Equipment, Battery Analyzers
Chapter 15: Caring for Your Batteries from Birth to Retirement, Priming
Chapter 16: Practical Battery Tips, Battery Analyzers for Critical Missions

Do I need to discharge a battery before charging it?

Chapter 10: Getting the Most from your Batteries, How to Restore and Prolong Nickel-based Batteries

How does a battery analyzer improve battery reliability?

Chapter 11: Maintaining Fleet Batteries
Chapter 12: Battery Maintenance Equipment
Chapter 15: Caring for Your Batteries from Birth to Retirement, The Million Dollar Battery Problem

Can I restore weak batteries and how well do they perform?

Chapter 10: Getting the Most from your Batteries, Battery Recovery Rate

How accurate is battery quick testing?

Chapter 13: Making Battery Quick-Test Feasible

How do I store a battery?

Chapter 15: Caring for Your Batteries from Birth to Retirement, Storage

How do I recycle a battery?

Chapter 15: Caring for Your Batteries from Birth to Retirement, Battery Recycling

Search:
Advanced Search
Search Tips
? Find definitions of unfamiliar terms

Table of Contents | Battery FAQ | New Articles | About the Author | Links | Site Map | Contact Us

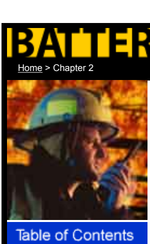

Table of Contents
Battery FAQ
New Articles
About the Author
Order Book
Links
Home

Search:
Advanced Search
Search Tips

? Find definitions of unfamiliar terms

<< Previous Page Next Page >>

Chapter 2: Battery Chemistries

Battery novices often argue that advanced battery systems are now available that offer very high energy densities, deliver 1000 charge/discharge cycles and are paper thin. These attributes are indeed achievable — unfortunately not in the same battery pack. A given battery may be designed for small size and long runtime, but this pack would have a limited cycle life. Another battery may be built for durability, but it would be big and bulky. A third pack may have high energy density and long durability, but would be too expensive for the commercial consumer.

Battery manufacturers are well aware of customer needs and have responded by offering battery packs that best suit the specific application. The mobile phone industry is an example of this clever adaptation. For this market, the emphasis is placed on small size and high energy density. Longevity comes in second.

The mention of NiMH on a battery pack does not automatically guarantee high energy density. A prismatic NiMH battery for a mobile phone, for example, is made for slim geometry and may only have an energy density of 60Wh/kg. The cycle count for this battery would be limited to around 300. In comparison, a cylindrical NiMH offers energy densities of 80Wh/kg and higher. Still, the cycle count of this battery will be moderate to low. High durability NiMH batteries, which are intended for industrial use and the electric vehicle enduring 1000 discharges to 80 percent depth-of discharge, are packaged in large cylindrical cells. The energy density on these cells is a modest 70Wh/kg.

Similarly, Li-ion batteries for defense applications are being produced that far exceed the energy density of the commercial equivalent. Unfortunately, these super-high capacity Li-ion batteries are deemed unsafe in the hands of the public. Neither would the general public be able to afford to buy them.

When energy densities and cycle life are mentioned, this book refers to a middle-of-the-road commercial battery that offers a reasonable compromise in size, energy density, cycle life and price. The book excludes miracle batteries that only live in controlled environments.

<< Previous Page Next Page >>

Table of Contents
Battery FAQ
New Articles
About the Author
Order Book
Links
Home

Search:
go
Advanced Search
Search Tips

? Find definitions of unfamiliar terms

<< Previous Page Next Page >>

Chapter 6: The Secrets of Battery Runtime

Is the runtime of a portable device directly related to the size of the battery and the energy it can hold? In most cases, the answer is yes. But with digital equipment, the length of time a battery can operate is not necessarily linear to the amount of energy stored in the battery.

In this chapter we examine why the specified runtime of a portable device cannot always be achieved, especially after the battery has aged. We address the four renegades that are affecting the performance of the battery. They are: declining capacity, increasing internal resistance, elevated self-discharge, and premature voltage cut-off on discharge.

Declining Capacity

The amount of charge a battery can hold gradually decreases due to usage, aging and, with some chemistries, lack of maintenance. Specified to deliver about 100 percent capacity when new, the battery eventually requires replacement when the capacity drops to the 70 or 60 percent level. The warranty threshold is typically 80 percent.

The energy storage of a battery can be divided into three imaginary sections consisting of available energy, the empty zone that can be refilled and the rock content that has become unusable. Figure 6-1 illustrates these three sections of a battery.

In nickel-based batteries, the rock content may be in the form of crystalline formation, also known as memory. Deep cycling can often restore the capacity to full service. Also known as 'exercise', a typical cycle consists of one or several discharges to 1V/cell with subsequent discharges.

Figure 6-1: Battery charge capacity. Three imaginary sections of a battery consisting of available energy, empty zone and rock content.

With usage and age, the rock content grows. Without regular maintenance, the user may end up carrying rocks instead of batteries.

The loss of charge acceptance of the Li-ion/polymer batteries is due to cell oxidation, which occurs naturally during use and as part of aging. Li-ion batteries cannot be restored with cycling or any other external means. The capacity loss is permanent because the metals used in the cells are designated to run for a specific time only and are being consumed during their service life.

Performance degradation of the lead acid battery is often caused by sulfation, a thin layer that forms on the negative cell plates, which inhibits current flow. In addition, there is grid corrosion that sets in on the positive plate. With sealed lead acid batteries, the issue of water permeation, or loss of electrolyte, also comes into play. Sulfation can be reversed to a certain point with cycling and/or topping charge but corrosion and permeation are permanent. Adding water to a sealed lead acid battery may help to restore operation but the long-term results are unpredictable.

<< Previous Page Next Page >>

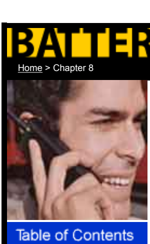

<< Previous Page Next Page >>

Chapter 8: Choosing the Right Battery

What causes a battery to wear down — is it mechanical or chemical? The answer is 'both'. A battery is a perishable product that starts deteriorating from the time it leaves the factory. Similar to a spring under tension, a battery seeks to revert to its lowest denominator. The rate of aging is subject to depth of discharge, environmental conditions, charge methods and maintenance procedures (or lack thereof). Each battery chemistry behaves differently in terms of aging and wear through normal use.

What's the best battery for mobile phones?

Similar to a spring under tension, a battery seeks to revert to its lowest denominator.

When buying a replacement battery, the buyer often has the choice of different battery chemistries. Li-ion and Li-ion polymer batteries are used on newer phones, whereas the NiMH and NiCd are found in older models. If the buyer has a choice, the sales person may advise a customer to go for the highest capacity rating and to stay away from the NiCd because of the memory effect. The customer may settle for the slim-line NiMH because it offers relatively high capacity in a small package and is reasonably priced.

Seemingly a wise choice, an analysis in this chapter reveals that other chemistries may have served better. The NiMH offers good value for the price but falls short in expected cycle life. Although excellent when new, the performance trails off quickly after about 300 cycles due to decreased capacity and rising internal resistance. In comparison, the Li-ion can be used for about 500 cycles. The best cycle count is achieved with NiCd. Properly maintained, the NiCd delivers over 1000 cycles and the internal resistance remains low. However, the NiCd offers about 30 percent less capacity compared to the NiMH. In addition, the NiCd is being removed from the mobile phone market because of environmental concerns.

Switching to environmentally friendlier batteries is fitting, especially in the mobile phone market where the NiMH performs reasonably well and can be economical. The battery disposal issue is difficult to control, particularly in the hands of a diverse user group.

The NiMH and NiCd are considered high maintenance batteries.

The NiMH and NiCd are considered high maintenance batteries, which require regular discharge cycles to prevent what is referred to as 'memory'. Although the NiMH was originally advertised as memory-free, both NiCd and NiMH are affected by the phenomenon. The capacity loss is caused by crystalline formation that is generated by the positive nickel plate, a metal shared by both systems.

Nickel-based batteries, especially NiCd's, should be fully discharged once per month. If such maintenance is omitted for four months or more, the capacity drops by as much as one third. A full restoration becomes more difficult the longer service is withheld.

It is not recommended to discharge a battery before each charge because this wears down the battery unnecessarily and shortens the life. Neither is it advisable to leave a battery in the charger for a long period of time. When not in use, the battery should be put on a shelf and charged before use. Always store the battery in a cool place.

Is the Li-ion a better choice? Yes, for many applications. The Li-ion is a low maintenance battery which offers high energy, is lightweight and does not require periodic full discharge. No trickle charge is applied once the battery reaches full charge. The Li-ion battery can stay in most chargers until used. The charging process of a Li-ion is, in many ways, simpler and cleaner than that of nickel-based systems, but requires tighter tolerances. Repeated insertion into the charger or cradle does not affect the battery by inducing overcharge.

On the negative side, the Li-ion gradually loses charge acceptance as part of aging, even if not used. For this reason, Li-ion batteries should not be stored for long periods of time but be rotated like perishable food. The buyer should be aware of the manufacturing date when purchasing a replacement battery.

The Li-ion is most economical for those who use a mobile phone daily. Up to 1000 charge/discharge cycles can be expected if used within the expected service life of about two to three years. Because of the aging effect, the Li-ion does not provide an economical solution for the occasional user. If the Li-ion is the only battery choice and the equipment is seldom used, the battery should be removed from the equipment and stored in a cool place, preferably only partially charged.

So far, little is known about the life expectancy of the Li-ion polymer. Because of the similarities with the Li-ion, the long-term performance of both systems is expected to be similar. Much effort is being made to prolong the service life of lithium-based systems. New chemical additives have been effective in retarding the aging process.

<< Previous Page Next Page >>

BATTERIES IN A PORTABLE WORLD

Table of Contents
Battery FAQ
New Articles
About the Author
Order Book
Links
Home

<< Previous Page Next Page >>

Chapter 15: Caring for Your Batteries from Birth to Retirement

It is interesting to observe that batteries cared for by a single user generally last longer than those that operate in an open fleet system where everyone has access to, but no one is accountable for them. There are two distinct groups of battery users — the personal user and the fleet operator.

It is interesting to observe that batteries that are cared for by a single user generally last longer than those that operate in an open fleet system.

A personal user is one who operates a mobile phone, a laptop computer or a video camera for business or pleasure. He or she will most likely follow the recommended guidelines in caring for the battery. The user will get to know the irregularities of the battery. When the runtime gets low, the battery often gets serviced or replaced. Critical failures are rare because the owner adjusts to the performance of the battery and lowers expectations as the battery ages.

The fleet user, on the other hand, has little personal interest in the battery and is unlikely to tolerate a pack that is less than perfect. The fleet user simply grabs a battery from the charger and expects it to last through the shift. The battery is returned to the charger at the end of the day, ready for the next person. Little or no care is given to these batteries. Perhaps due to neglect, fleet batteries generally have a shorter service life than those in personal use.

How can fleet batteries be made to last longer? An interesting contrast in the handling of fleet batteries can be noted by comparing the practices of the US Army and the Dutch Army, both of which use fleet batteries. The US Army issues batteries with no maintenance program in place. If the battery fails, another pack is issued. Little or no care is given and the failure rate is high.

The Dutch Army, on the other hand, has moved away from the open fleet system by making the soldiers responsible for their batteries. This change was made in an attempt to reduce battery waste and improve reliability. The batteries are issued in the soldier's name and the packs become part of their personal belongings. The results are startling. Since the Dutch Army adapted this new regime, the failure rate has dropped considerably and, at the same time, battery performance has increased. Unexpected down time has almost been eliminated.

It should be noted that the Dutch Army uses exclusively NiCd batteries. Each pack receives periodic maintenance to prolong service life. Weak batteries are systematically replaced. The US Army, on the other hand, uses NiMH batteries. They are evaluating the Li-ion polymer for the next generation battery.

Because of the high failure rate of fleet batteries and the uncertain situations such failures create, some organizations assign a person to maintain batteries. This person checks all batteries on a scheduled basis, exercises them for optimum service life, and replaces those that fall below an accepted capacity level and do not recover with maintenance programs. Batteries perform an important function; giving them the care they deserve is appropriate.

<< Previous Page Next Page >>